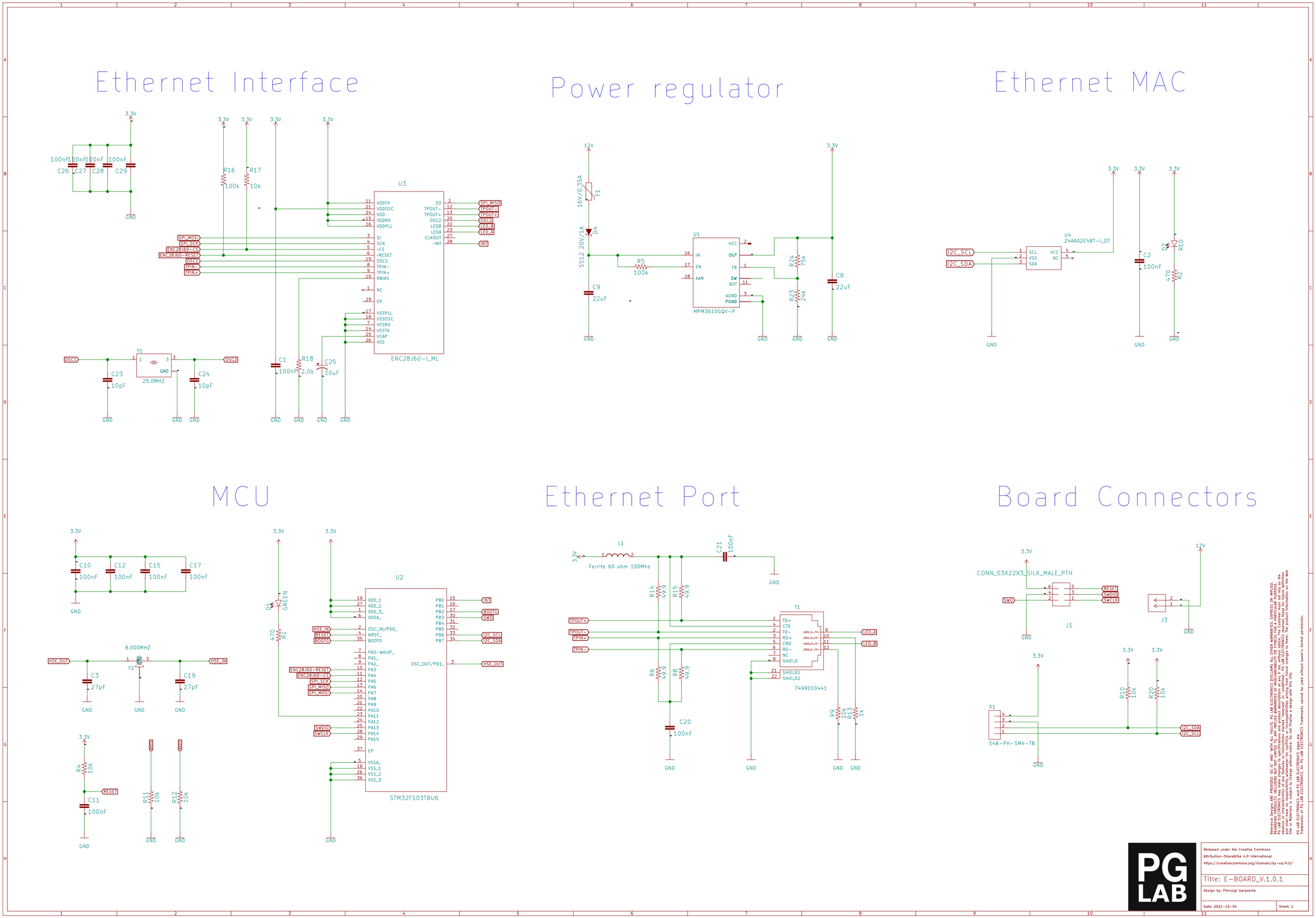

Reference Designs ARE PROVIDED "AS IS" AND "WITH ALL FAULTS. PG LAB ELECTRONICS DISCLAIMS ALL OTHER WARRANTIES, EXPRESS OR IMPLIED. Reference Designs are subject to change without notice. PG LAB ELECTRONICS may make changes to specifications and product descriptions at any time, without notice. The Customer must not rely on the absence or characteristics of any features or instructions marked "reserved" or "undefined." PG LAB ELECTRONICS reserves these for future definition and shall have no responsibility whatsoever for conflicts or incompatibilities arising from future changes to them. The product information on the web site or in material referred to is subject to change without notice. Do not finalize a design with this info.
PG LAB ELECTRONICS and PG LAB ELECTRONICS logos are Trademarks of PG LAB ELECTRONICS. All PG LAB ELECTRONICS Trademarks cannot be used without owner's formal permission.

Released under the Creative Commons Attribution-ShareAlike 4.0 International
https://creativecommons.org/licenses/by-sa/4.0/

Title: E-BOARD_V.1.0.1

Design by: Pierluigi Garaventa

Date: 2021-12-04

Sheet: 1