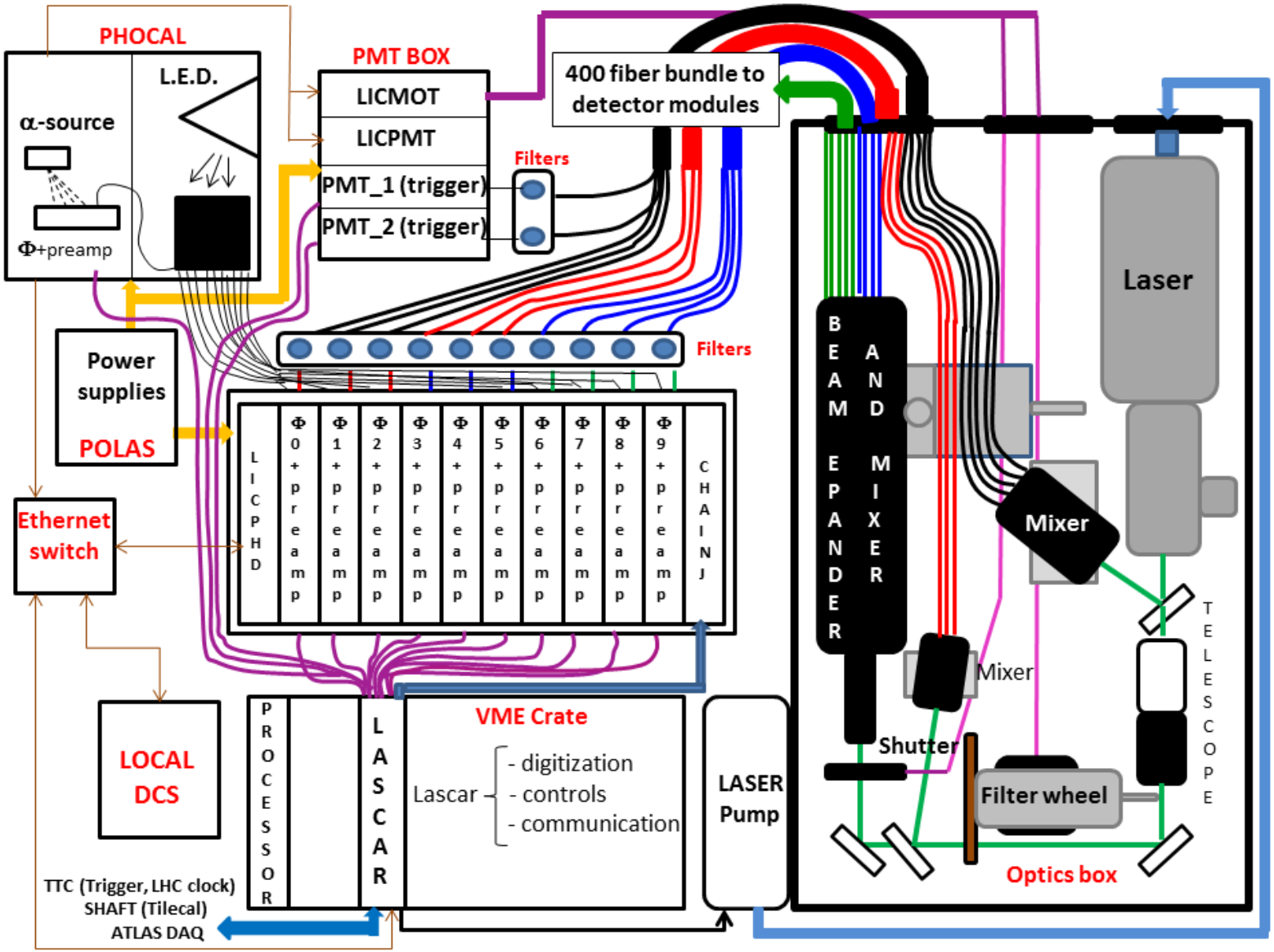
PHOCAL
L.E.D.
α-source
Φ+preamp
PMT BOX
LICMOT
LICPMT
PMT_1 (trigger)
PMT_2 (trigger)
Filters
400 fiber bundle to detector modules
Filters
Power supplies
POLAS
Ethernet switch
LICPHD
Φ0+preamp
Φ1+preamp
Φ2+preamp
Φ3+preamp
Φ4+preamp
Φ5+preamp
Φ6+preamp
Φ7+preamp
Φ8+preamp
Φ9+preamp
CHAINJ
BEAM EXPANDER
AND MIXER
Laser
Mixer
Mixer
TELESCOPE
Shutter
Filter wheel
Optics box
LOCAL DCS
PROCESSOR
LASCAR
VME Crate
Lascar
- digitization
- controls
- communication
LASER Pump
TTC (Trigger, LHC clock)
SHAFT (Tilecal)
ATLAS DAQ