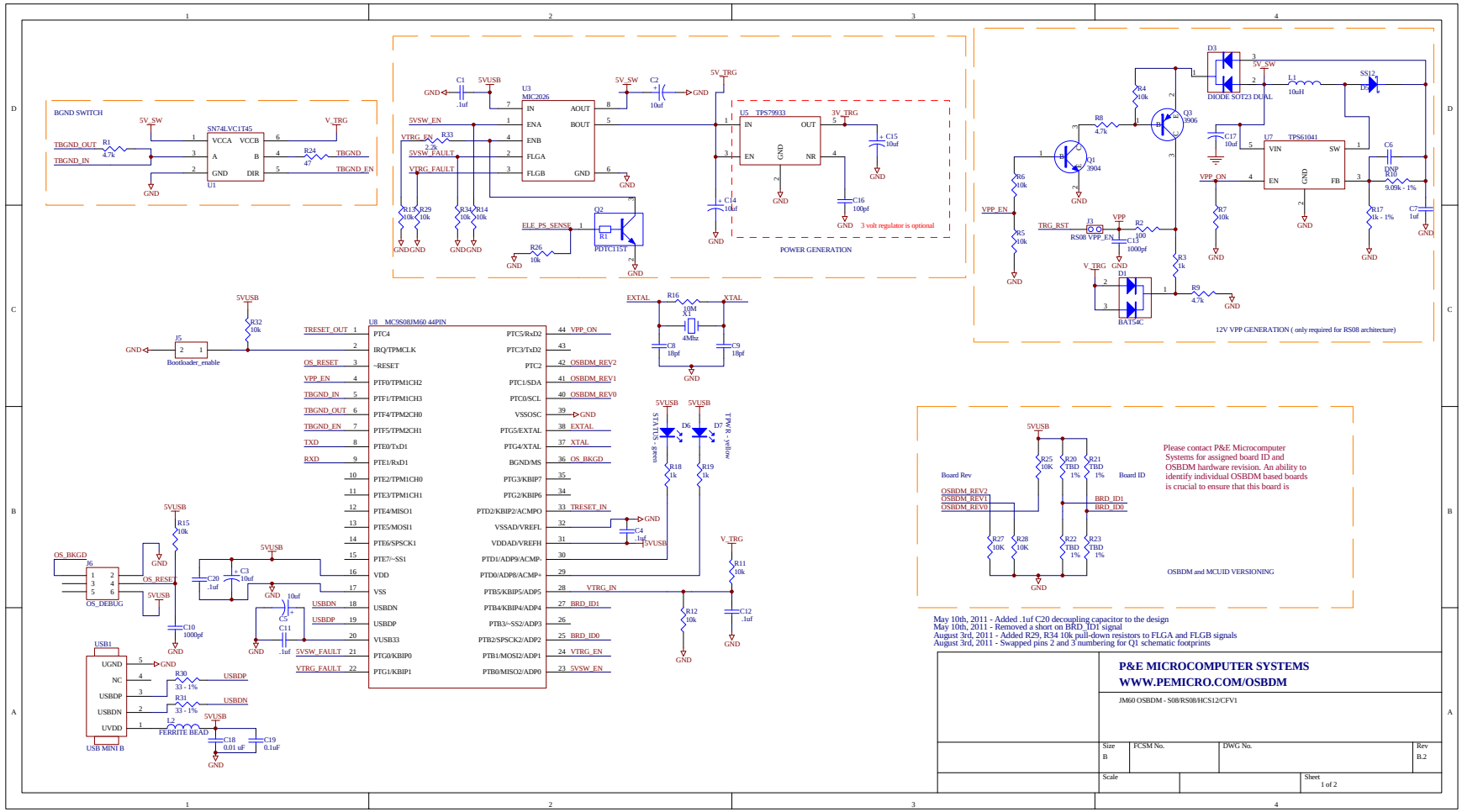
BGND SWITCH
SN74LVC1T45
U1
TBGND_OUT
TBGND_IN
TBGND
TBGND_EN
5V_SW
V_TRG
U3
MIC2026
5VSW_EN
VTRG_EN
5VSW_FAULT
VTRG_FAULT
5V_TRG
U5 TPS79933
3V_TRG
3 volt regulator is optional
POWER GENERATION
ELE_PS_SENSE
PDTC115T
D3
DIODE SOT23 DUAL
SS12
U7 TPS61041
VPP_EN
VPP_ON
TRG_RST
RS08 VPP_EN
VPP
BAT54C
12V VPP GENERATION (only required for RS08 architecture)
Bootloader_enable
U8 MC9S08JM60 44PIN
TRESET_OUT
OS_RESET
VPP_EN
TBGND_IN
TBGND_OUT
TBGND_EN
TXD
RXD
PTC4
IRQ/TPMCLK
~RESET
PTF0/TPM1CH2
PTF1/TPM1CH3
PTF4/TPM2CH0
PTF5/TPM2CH1
PTE0/TxD1
PTE1/RxD1
PTE2/TPM1CH0
PTE3/TPM1CH1
PTE4/MISO1
PTE5/MOSI1
PTE6/SPSCK1
PTE7/~SS1
VDD
VSS
USBDN
USBDP
VUSB33
PTG0/KBIP0
PTG1/KBIP1
PTC5/RxD2
PTC3/TxD2
PTC2
PTC1/SDA
PTC0/SCL
VSSOSC
PTG5/EXTAL
PTG4/XTAL
BGND/MS
PTG3/KBIP7
PTG2/KBIP6
PTD2/KBIP2/ACMPO
VSSAD/VREFL
VDDAD/VREFH
PTD1/ADP9/ACMP-
PTD0/ADP8/ACMP+
PTB5/KBIP5/ADP5
PTB4/KBIP4/ADP4
PTB3/~SS2/ADP3
PTB2/SPSCK2/ADP2
PTB1/MOSI2/ADP1
PTB0/MOSI2/ADP0
VPP_ON
OSBDM_REV2
OSBDM_REV1
OSBDM_REV0
EXTAL
XTAL
OS_BKGD
VTRG_IN
BRD_ID1
BRD_ID0
STATUS - green
TPM/RX - yellow
OS_DEBUG
USB1
USB MINI B
FERRITE BEAD
Board Rev
Board ID
Please contact P&E Microcomputer Systems for assigned board ID and OSBDM hardware revision. An ability to identify individual OSBDM based boards is crucial to ensure that this board is
OSBDM and MCUID VERSIONING
May 10th, 2011 - Added .1uf C20 decoupling capacitor to the design
May 10th, 2011 - Removed a short on BRD_ID1 signal
August 3rd, 2011 - Added R29, R34 10k pull-down resistors to FLGA and FLGB signals
August 3rd, 2011 - Swapped pins 2 and 3 numbering for Q1 schematic footprints
P&E MICROCOMPUTER SYSTEMS
WWW.PEMICRO.COM/OSBDM
JM60 OSBDM - S08/RS08/HCS12/CFV1
Size B
FCSM No.
DWG No.
Rev B.2
Scale
Sheet 1 of 2

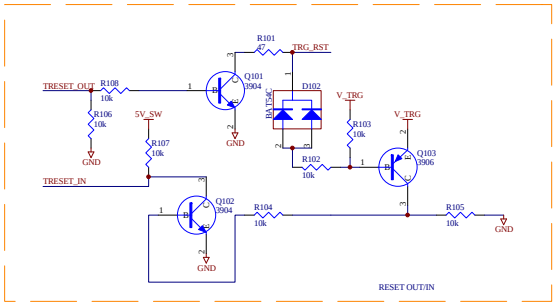

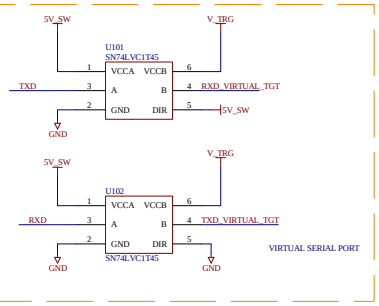

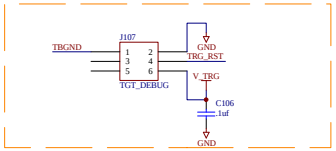

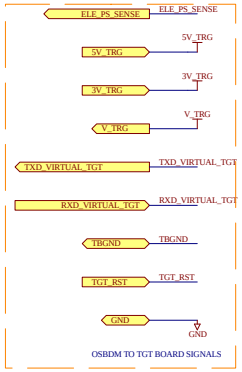

These signals should be connected to the rest of the board circuitry.

August 3rd, 2011 - Swapped pins 2 and 3 numbering for Q101, Q102 schematic footprints

P&E MICROCOMPUTER SYSTEMS
WWW.PEMICRO.COM/OSBDM

JM60 OSBDM - S08/RS08/HCS12/CFV1

Size	FCSM No.	DWG No.	Rev
B			B.2

Scale

Sheet 2 of 2