Machine Learning IC Design Report HW4

File structure:

```
13:00 mlchip021@ee22[~/hw4]% tree
.
├── 09_SUBMIT
    ├── 00_tar -> /RAID2/COURSE/2025_Spring/mlchip/mlchipTA03/hw4_script_encrypt/00_tar
    ├── 01_submit -> /RAID2/COURSE/2025_Spring/mlchip/mlchipTA03/hw4_script_encrypt/01_submit
    ├── 02_check -> /RAID2/COURSE/2025_Spring/mlchip/mlchipTA03/hw4_script_encrypt/02_check
    ├── demo_result_hw4_mlchip021.csv
    ├── hw4_mlchip021
    │   ├── clockreset_mlchip021.cpp
    │   ├── clockreset_mlchip021.h
    │   ├── controller_mlchip021.h
    │   ├── Conv_functions_mlchip021.h
    │   ├── core_mlchip021.h
    │   ├── Layer_param_mlchip021.h
    │   ├── main_mlchip021.cpp
    │   ├── PARAM_mlchip021.h
    │   ├── pe_mlchip021.h
    │   ├── ROM_mlchip021.cpp
    │   ├── ROM_mlchip021.h
    │   ├── router_mlchip021.h
    │   └── Utils_mlchip021.h
    └── hw4_mlchip021.tar.gz
```

Simulation result:

```
13:15 mlchip021@ee26[~/hw4/09_SUBMIT]% ./01_submit
[Info] Deadline check OK ...
[Info] File check OK ...
[Info] Copying TA's Makefile to your folder.
[Info] mlchip021 SystemC start
[Info] result_cat.log Match Golden Result
[Info] result_dog.log Match Golden Result


Server_Account  mlchip021
Cat (35%)       0
Dog (35%)       0
Error_Message   No_Error
Submiss_Date    2025/05/20
Submiss_Time    17:35:32
Sim_Time (s)    2608.74


[Info] Your file will be submitted to:  TA folder
[Warning]  demo has been submitted.
[Warning]  It will overwrite your original file.
[Info] Now submit hw4_mlchip021.tar.gz file to system.
[Success] Copying Sucessfully.
============================================================
                    Submit Report
============================================================
Result          :   has been submitted.
Submission time :  2025/05/20 17:35:32
============================================================
        ----------------------------
        --                        --       |\__||
        --  Congratulations !!    --      / O.O  |
        --                        --    /_____   |
        --                        --   /^ ^ ^ \  |
        --                        --  |^ ^ ^ ^ |w|
        ----------------------------   \m___m__|_|



============================================================
13:15 mlchip021@ee26[~/hw4/09_SUBMIT]%
```

```
13:15 mlchip021@ee26[~/hw4]% make cat clean dog
g++ -I . -I  /RAID2/COURSE/2025_Spring/mlchip/mlchipTA01/systemc-2.3.3/in
-o run *.cpp -lsystemc-2.3.3 -Wl,-rpath,/RAID2/COURSE/2025_Spring/mlchip/
IMAGE_FILE_NAME=cat.txt ./run

        SystemC 2.3.3-Accellera --- Mar  4 2025 01:46:38
        Copyright (c) 1996-2018 by all Contributors,
        ALL RIGHTS RESERVED
Top 100 classes:
==================================================
  idx |      val | possibility | class name
--------------------------------------------------
  285 |    20.21 |       96.38 | Egyptian cat
  281 |    16.14 |        1.65 | tabby
  282 |    15.73 |        1.10 | tiger cat
  287 |    14.79 |        0.43 | lynx
  728 |    14.41 |        0.29 | plastic bag
  330 |    12.73 |        0.05 | wood rabbit
  331 |    12.19 |        0.03 | hare
  457 |    10.94 |        0.01 | bow tie
  335 |    10.67 |        0.01 | fox squirrel
  463 |    10.57 |        0.01 | bucket
  478 |    10.32 |        0.00 | carton
  876 |    10.29 |        0.00 | tub
  622 |    10.18 |        0.00 | lens cap
  904 |    10.01 |        0.00 | window screen
  700 |     9.56 |        0.00 | paper towel
  278 |     9.39 |        0.00 | kit fox
    8 |     9.29 |        0.00 | hen
```

```
13:15 mlchip021@ee26[~/hw4]% make dog
g++ -I . -I  /RAID2/COURSE/2025_Spring/mlchip/mlchipTA01/systemc-2.3.3/inclu
-o run *.cpp -lsystemc-2.3.3 -Wl,-rpath,/RAID2/COURSE/2025_Spring/mlchip/mlch
IMAGE_FILE_NAME=dog.txt ./run

        SystemC 2.3.3-Accellera --- Mar  4 2025 01:46:38
        Copyright (c) 1996-2018 by all Contributors,
        ALL RIGHTS RESERVED
Top 100 classes:
==================================================
  idx |      val | possibility | class name
--------------------------------------------------
  207 |    16.59 |       38.63 | golden retriever
  175 |    15.57 |       13.86 | otterhound
  220 |    15.36 |       11.26 | Sussex spaniel
  163 |    15.00 |        7.86 | bloodhound
  219 |    14.59 |        5.22 | cocker spaniel
  168 |    14.39 |        4.28 | redbone
  160 |    14.35 |        4.07 | Afghan hound
  213 |    14.18 |        3.46 | Irish setter
  291 |    14.10 |        3.19 | lion
  211 |    13.01 |        1.07 | vizsla
  244 |    12.81 |        0.88 | Tibetan mastiff
  216 |    12.69 |        0.78 | clumber
  200 |    12.46 |        0.62 | Tibetan terrier
  159 |    12.42 |        0.59 | Rhodesian ridgeback
  152 |    12.38 |        0.57 | Japanese spaniel
  167 |    12.01 |        0.39 | English foxhound
  208 |    11.65 |        0.28 | Labrador retriever
  294 |    11.63 |        0.27 | brown bear
  165 |    11.51 |        0.24 | black-and-tan coonhound
  262 |    11.46 |        0.23 | Brabancon griffon
  156 |    11.40 |        0.21 | Blenheim spaniel
  185 |    11.29 |        0.19 | Norfolk terrier
  260 |    11.11 |        0.16 | chow
```

Some questions:

How do you design the router and NI?

I connected each router together to optimize the transmission path, and used handshake-base as the transmission protocol on NI. When transmitting the first header, the source and destination will be sent.

For switching techniques, I use the circuit switching. Because when I try to use wormhole switching I will go into deadlock.

I have tried to use virtual channel, but it is difficult to me. So I decided to use the circuit switching.

What routing algorithm do you use?

I use the XY-routing method to simple the routing algorithm.
In XY mode, I will find the direction closest to the destination and go X first and then Y.

What is the depth of the buffer?

In the input buffer at each Router, I use the depth one buffer for every Router. Because the design is simple and easy to accomplish.

Do you use virtual channels?

No. Because I use the circuit switching and I can not implement the virtual channel by myself, I don't use the virtual channel.

Implementation approach:

I first established the core sending and receiving logic and the layer calculations of each core. After confirming that the data can be sent normally, I wrote the router algorithm and protocol logic, and debugged the receiving logic during the implementation. And configured the relevant positions between each layer to ensure data transmission.

Challenges faced:

During the implementation, I found that in the final fully connected layer, it took a lot of time to pass the weights, which resulted in each image taking more than 20 minutes to calculate. This took me a lot of time to debug in the early stages because each result took a long time to appear.

Observations:

In the last few layers, I found a 4096*9216 layer, which caused the calculation time to be very long.

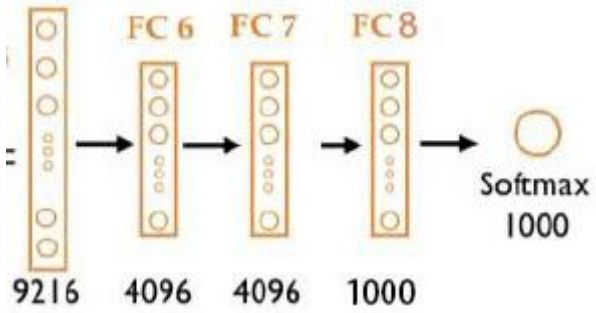

Comment:

Through this assignment, I learned a lot about the internal operation principles of NOC, such as data transmission methods, router algorithms and connection methods, how to build, and how various resources communicate. Most importantly, I used Alexnet from Assignment 2 to implement it, which made me understand the perspectives from which the actual use of NOC for acceleration can be viewed. This is very helpful for my future hardware architecture design. In the future, I will try to shorten the data transmission time to improve performance.

Reference:

Lecture Note
Hw2 handout
Hw4 handout
ChatGPT