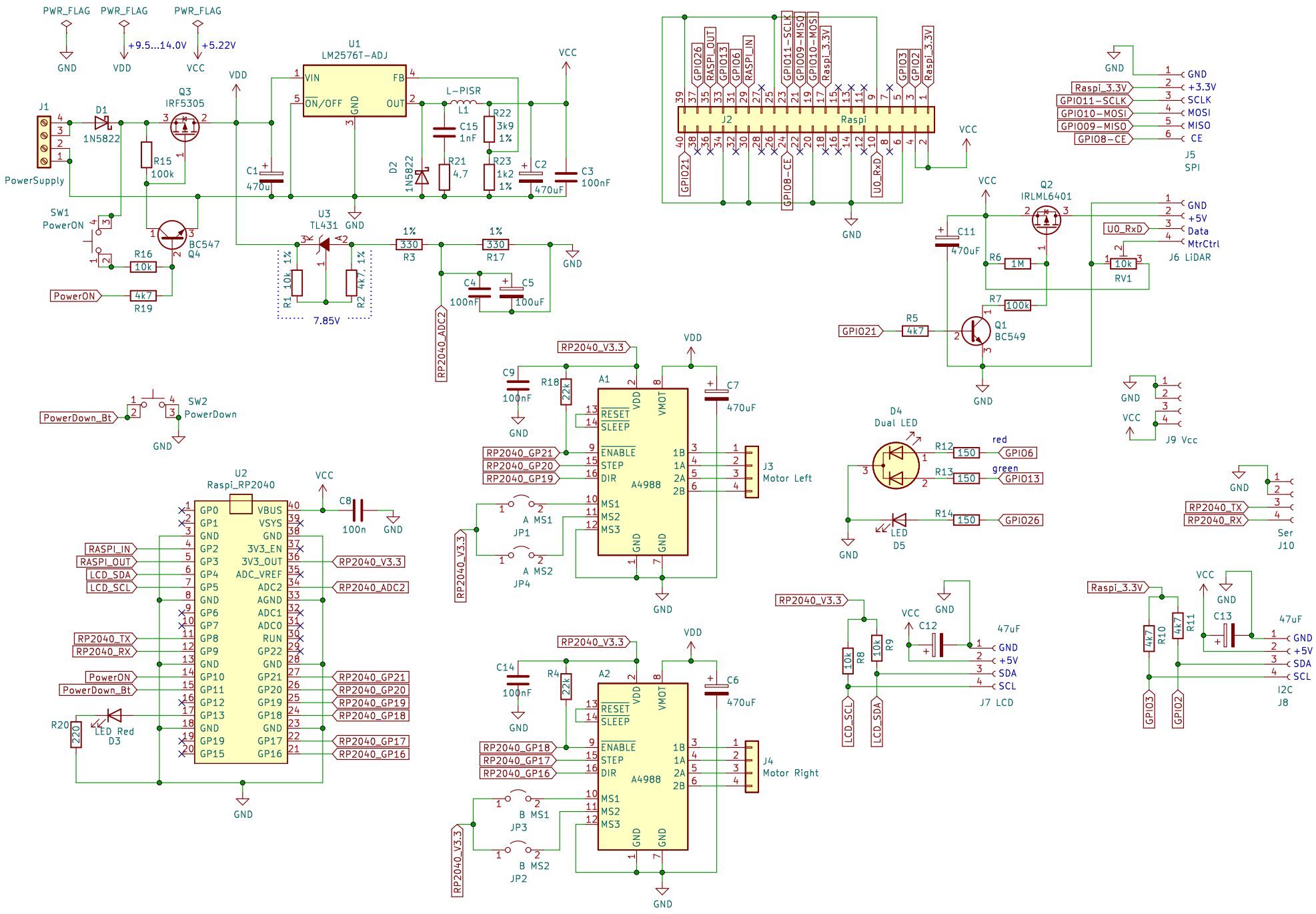
PWR_FLAG
GND
VDD
+9.5...14.0V
VCC
+5.22V
U1
LM2576T-ADJ
VIN
FB
ON/OFF
GND
OUT
L-PISR
L1
J1
PowerSupply
D1
1N5822
Q3
IRF5305
R15
100k
C1
470u
C15
1nF
R22
3k9
1%
D2
1N5822
R21
4,7
R23
1k2
1%
C2
470uF
C3
100nF
SW1
PowerON
BC547
Q4
R16
10k
PowerON
4k7
R19
U3
TL431
R1
10k
R2
4k7
7.85V
330
R3
330
R17
C4
100nF
C5
100uF
RP2040_ADC2
J2
Raspi
GPIO26
RASPI_OUT
GPIO13
GPIO6
RASPI_IN
GPIO11-SCLK
GPIO9-MISO
GPIO10-MOSI
Raspi_3.3V
GPIO3
GPIO2
GPIO21
GPIO8-CE
U0_RxD
J5
SPI
Raspi_3.3V
GPIO11-SCLK
GPIO10-MOSI
GPIO9-MISO
GPIO8-CE
GND
+3.3V
SCLK
MOSI
MISO
CE
Q2
IRLML6401
C11
470uF
R6
1M
R7
100k
R5
4k7
Q1
BC549
GPIO21
U0_RxD
10k
RV1
J6 LiDAR
GND
+5V
Data
MtrCtrl
SW2
PowerDown
PowerDown_Bt
A1
A4988
RESET
SLEEP
ENABLE
STEP
DIR
MS1
MS2
MS3
VDD
VMOT
GND
1B
1A
2A
2B
C9
100nF
R18
22k
C7
470uF
RP2040_V3.3
RP2040_GP21
RP2040_GP20
RP2040_GP19
A MS1
JP1
A MS2
JP4
J3
Motor Left
D4
Dual LED
R12
150
red
GPIO6
R13
150
green
GPIO13
R14
150
GPIO26
LED
D5
J9 Vcc
RP2040_TX
RP2040_RX
Ser
J10
U2
Raspi_RP2040
GP0
GP1
GND
GP2
GP3
GP4
GP5
GP6
GP7
GP8
GP9
GP10
GP11
GP12
GP13
GP19
GP15
VBUS
VSYS
3V3_EN
3V3_OUT
ADC_VREF
ADC2
AGND
ADC1
ADC0
RUN
GP22
GP21
GP20
GP19
GP18
GP17
GP16
RASPI_IN
RASPI_OUT
LCD_SDA
LCD_SCL
RP2040_TX
RP2040_RX
PowerON
PowerDown_Bt
RP2040_V3.3
RP2040_ADC2
RP2040_GP21
RP2040_GP20
RP2040_GP19
RP2040_GP18
RP2040_GP17
RP2040_GP16
C8
100n
R20
220
LED Red
D3
A2
A4988
C14
100nF
R4
22k
C6
470uF
B MS1
JP3
B MS2
JP2
J4
Motor Right
10k
R8
10k
R9
C12
47uF
J7 LCD
LCD_SCL
LCD_SDA
4k7
R10
4k7
R11
C13
47uF
I2C
J8
GPIO3
GPIO2