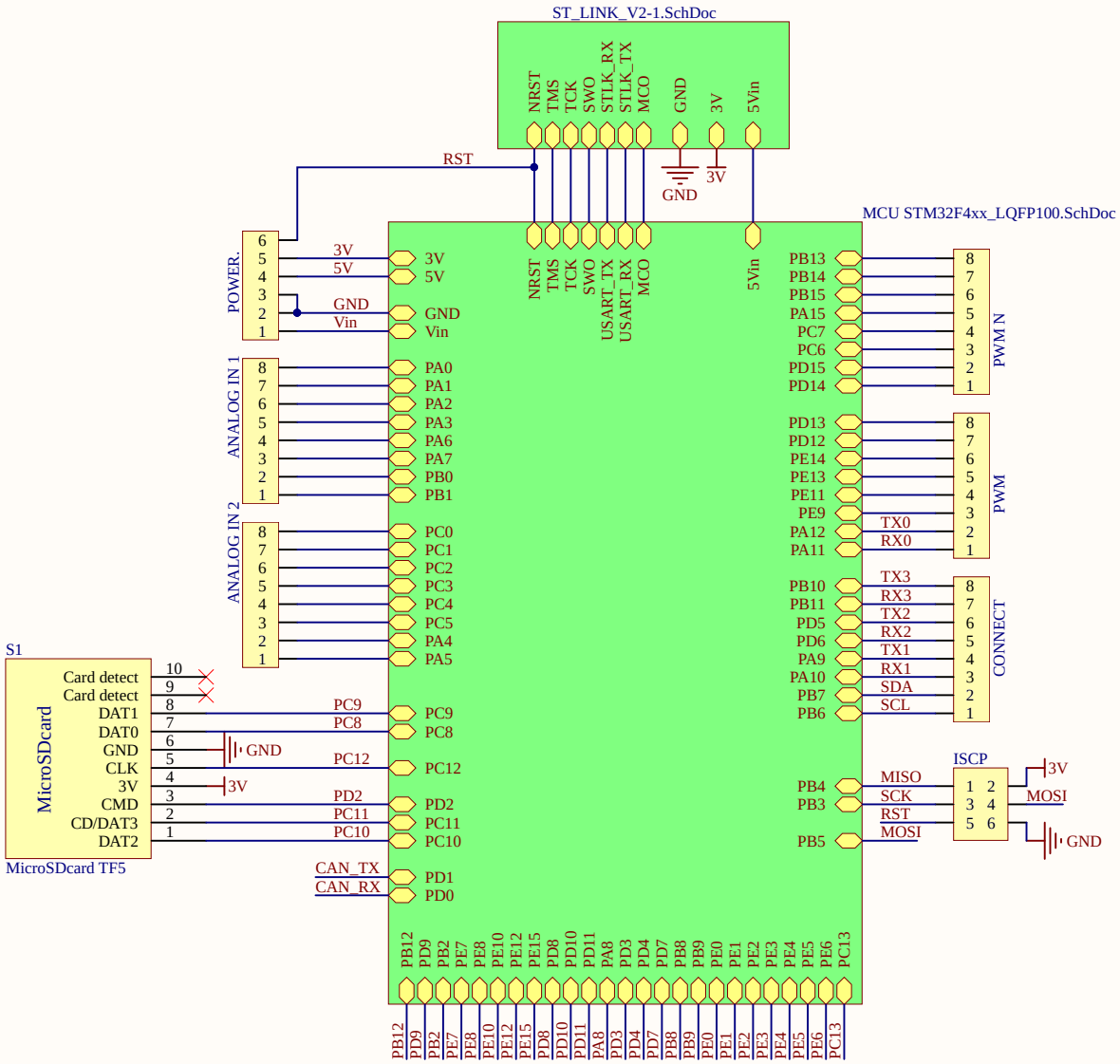

Title		
Size A4	Number	Revision
Date: 12/21/2016	Sheet of	
File: E:\Altium Designer\..\Board STM32F4xx_LQFP100.SchDoc	Drawn By:	

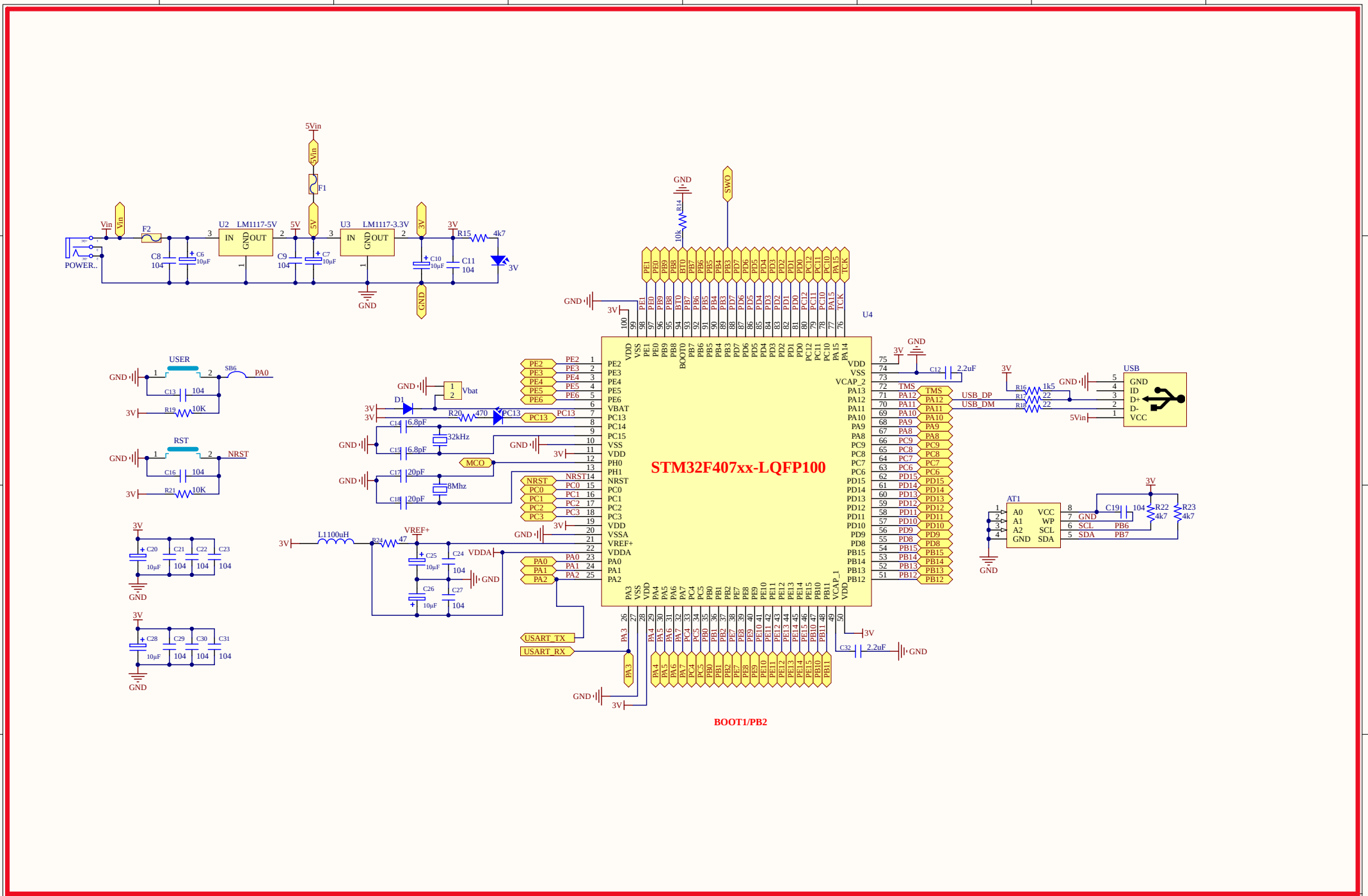

Title		
Size A3	Number	Revision
Date: 12/21/2016	Sheet of	
File: E:\Altium Designer\..\MCU STM32F4xx_LQFP100.SchDoc	Drawn By:	

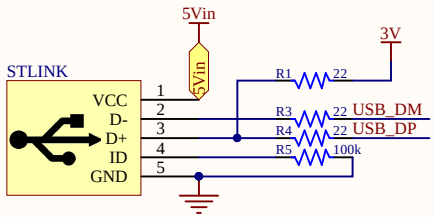

USB ST-LINK

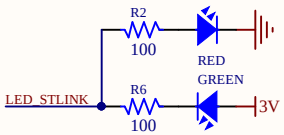

COM

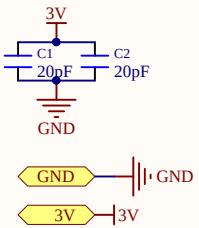

PWR

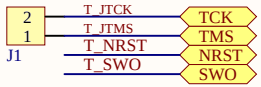

SWD

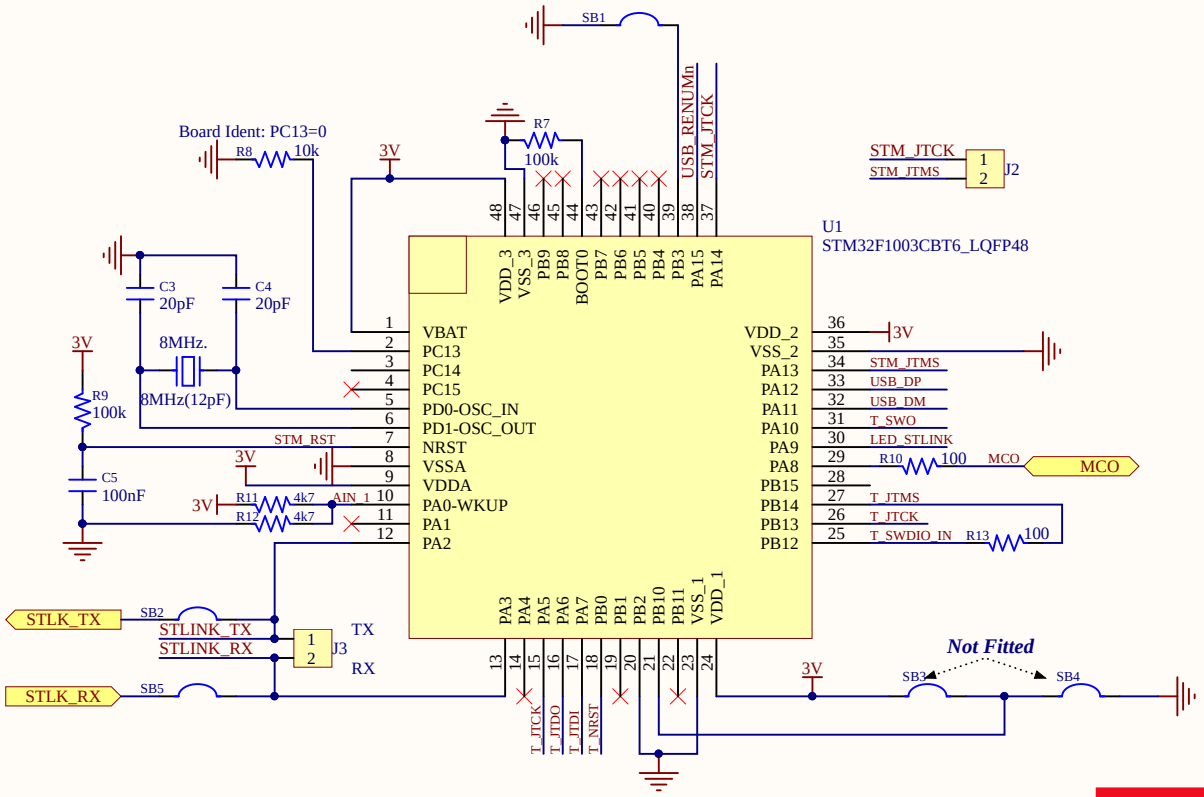

STLINK V2 -MINI

Title		
Size A4	Number	Revision
Date: 12/21/2016	Sheet of	
File: E:\Altium Designer\..\ST_LINK_V2-1.SchDoc	Drawn By:	

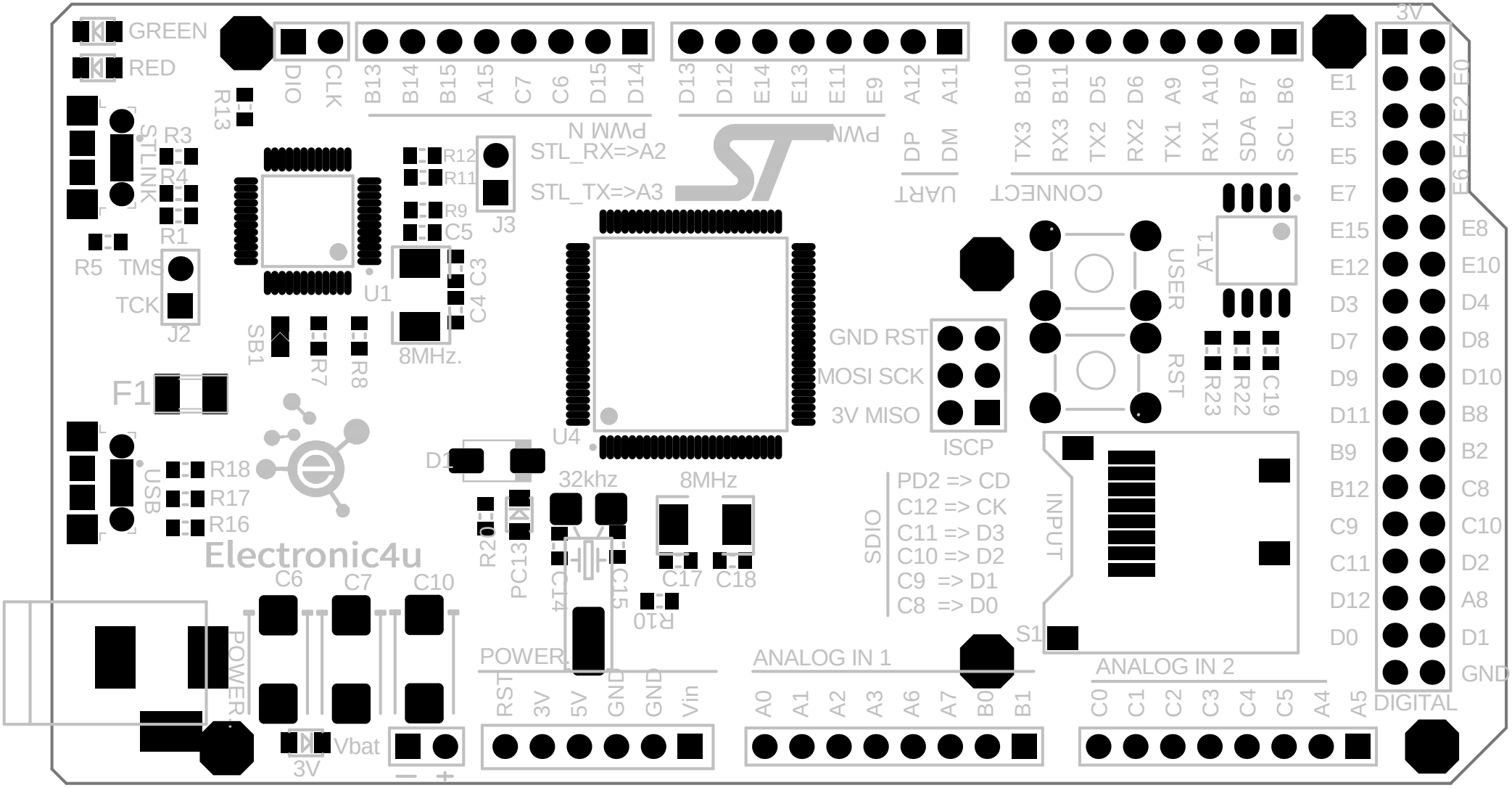
GREEN
RED
R13
DIO
CLK
B13
B14
B15
A15
C7
C6
D15
D14
D13
D12
E14
E13
E11
E9
A12
A11
B10
B11
D5
D6
A9
A10
B7
B6
3V
E1
E3
E5
E7
E15
E12
D3
D7
D9
D11
B9
B12
C9
C11
D12
D0
E0
E2
E4
E6
E8
E10
D4
D8
D10
B8
B2
C8
C10
D2
A8
D1
GND
DIGITAL
PWM N
STL_RX=>A2
STL_TX=>A3
PWM
DP
DM
UART
TX3
RX3
TX2
RX2
TX1
RX1
SDA
SCL
CONNECT
R3
R4
R1
R5
TMS
TCK
J2
STLINK
R12
R11
R9
C5
C3
C4
J3
U1
8MHz.
SB1
R7
R8
F1
USB
R18
R17
R16
Electronic4u
D1
R20
PC13
32khz
C14
C15
8MHz
C17
C18
R10
U4
GND RST
MOSI SCK
3V MISO
ISCP
USER
RST
AT1
R23
R22
C19
PD2 => CD
C12 => CK
C11 => D3
C10 => D2
C9 => D1
C8 => D0
SDIO
INPUT
S1
C6
C7
C10
POWER
Vbat
3V
POWER
RST
3V
5V
GND
GND
Vin
ANALOG IN 1
A0
A1
A2
A3
A6
A7
B0
B1
ANALOG IN 2
C0
C1
C2
C3
C4
C5
A4
A5

BOARD MODEL
E4U F407
MADE BY VIETNAM

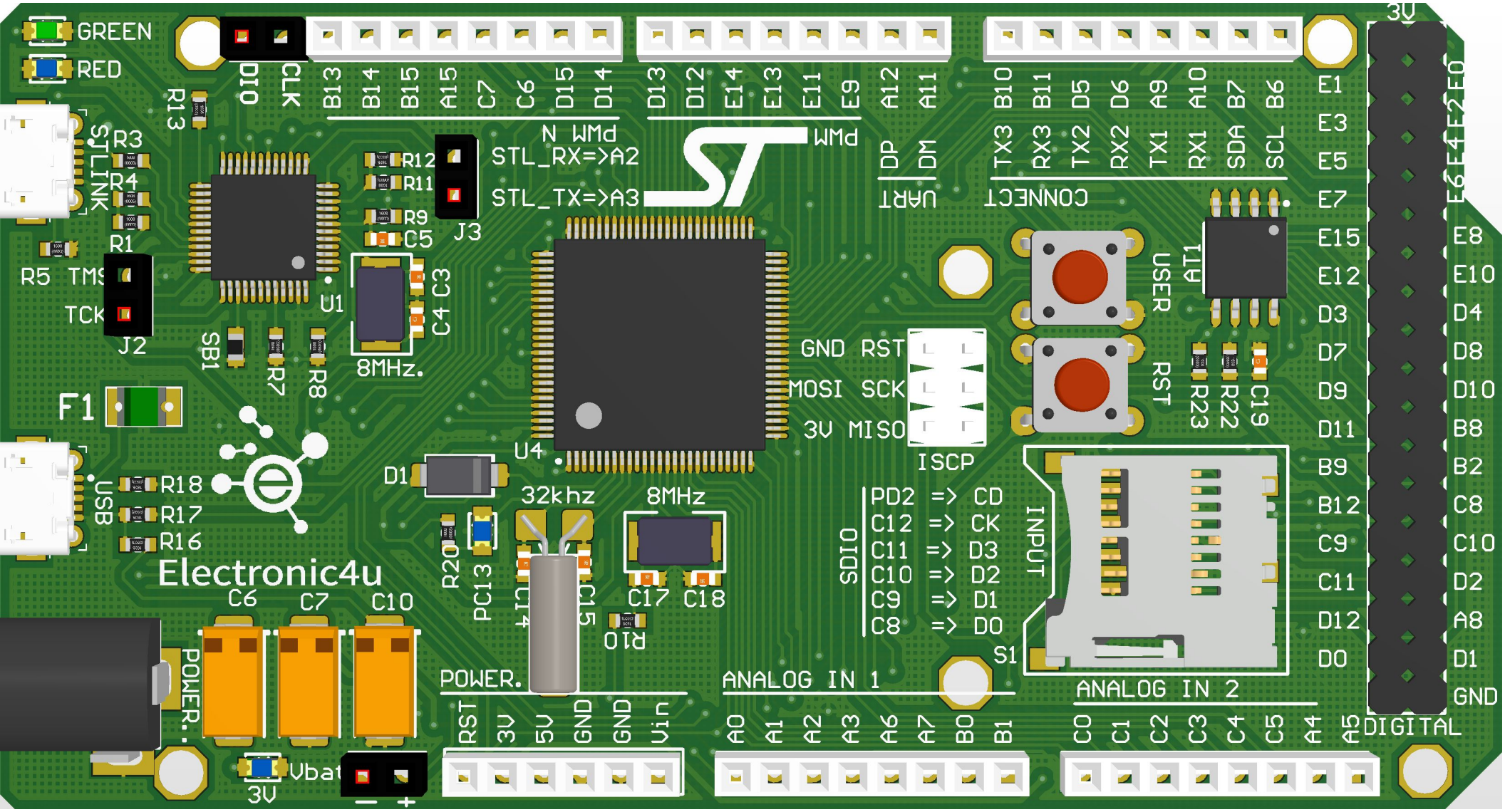
GREEN
RED
R13
STLINK
R3
R4
R1
R5 TMS
TCK
J2
SB1
R7
R8
U1
F1
USB
R18
R17
R16
Electronic4u
C6
C7
C10
POWER.
Vbat
3V
DIO
CLK
B13 B14 B15 A15 C7 C6 D15 D14
N WMd
R12
R11
R9
C5
J3
STL_RX=>A2
STL_TX=>A3
8MHz.
C4 C3
D1
R20
PC13
32khz
U4
C15
C17 C18
R10
8MHz
D13 D12 E14 E13 E11 E9 A12 A11
WMd
DP DM
UART
B10 B11 D5 D6 A9 A10 B7 B6
TX3 RX3 TX2 RX2 TX1 RX1 SDA SCL
CONNECT
USER
AT1
RST
R23 R22 C19
GND RST
MOSI SCK
3V MISO
ISCP
SDIO
PD2 => CD
C12 => CK
C11 => D3
C10 => D2
C9 => D1
C8 => D0
INPUT
S1
ANALOG IN 1
ANALOG IN 2
RST 3V 5V GND GND Vin
A0 A1 A2 A3 A6 A7 B0 B1
C0 C1 C2 C3 C4 C5 A4 A5
3V
E1 E3 E5 E7 E15 E12 D3 D7 D9 D11 B9 B12 C9 C11 D12 D0
E0 E2 E4 E6 E8 E10 D4 D8 D10 B8 B2 C8 C10 D2 A8 D1 GND
DIGITAL

BOARD MODEL
LD04 U43
MADE BY MIEIN
R19
C13
SB6
R21
C16
C32
C23
C29
C22
C20
C12
C21
C31
C30
R14
C28
L1
R24
C27
C26
C25
C24
SB5
SB2
C2
C1
SB4
SB3
R6
R2
U3
U2
TO-252-3
F2
C11
C9
C8
R15