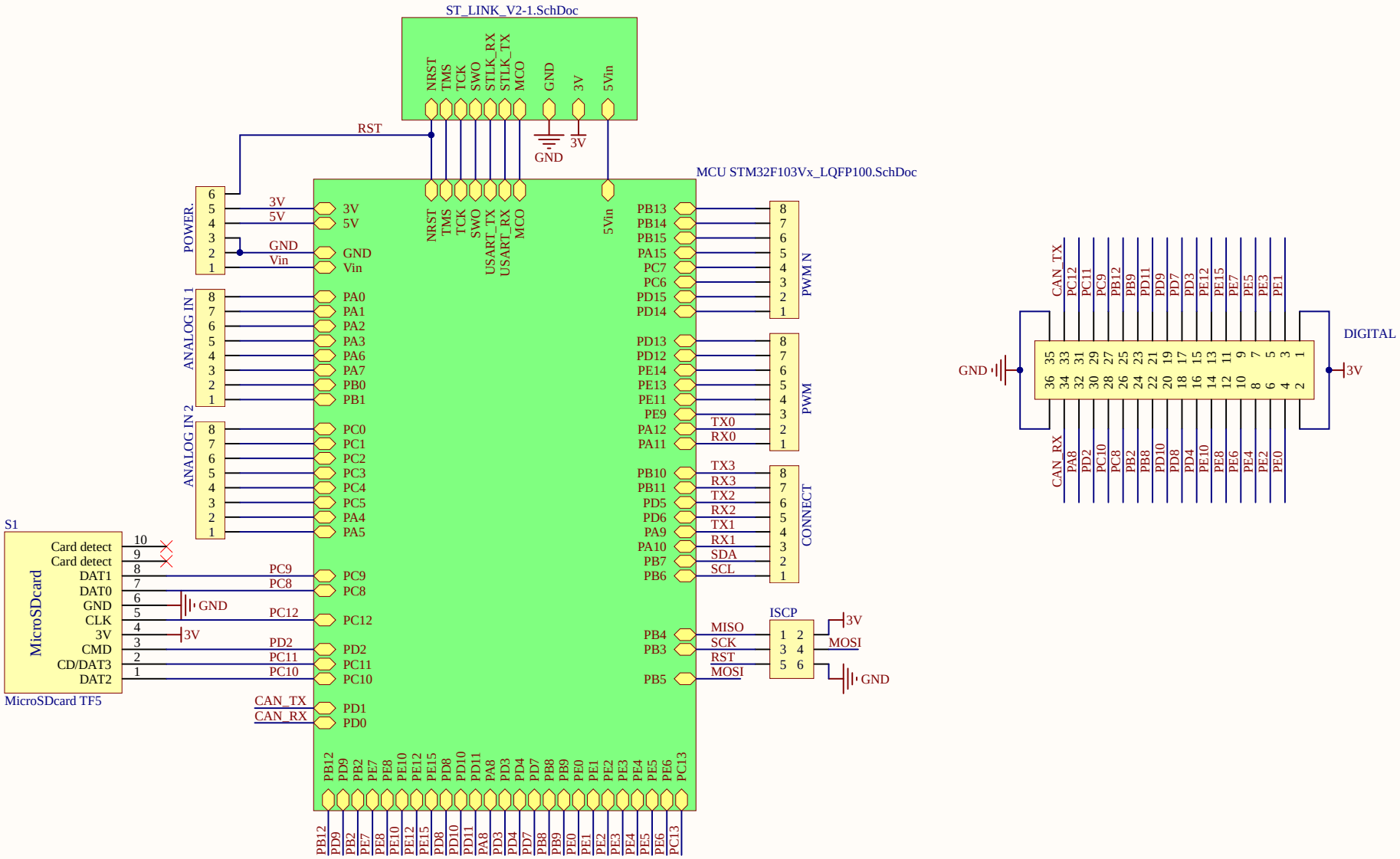

Title		
Size A4	Number	Revision
Date: 12/21/2016	Sheet of	
File: E:\Altium Designer\..\Board STM32F103VBT6QFP100.SchDoc	Drawn By:	

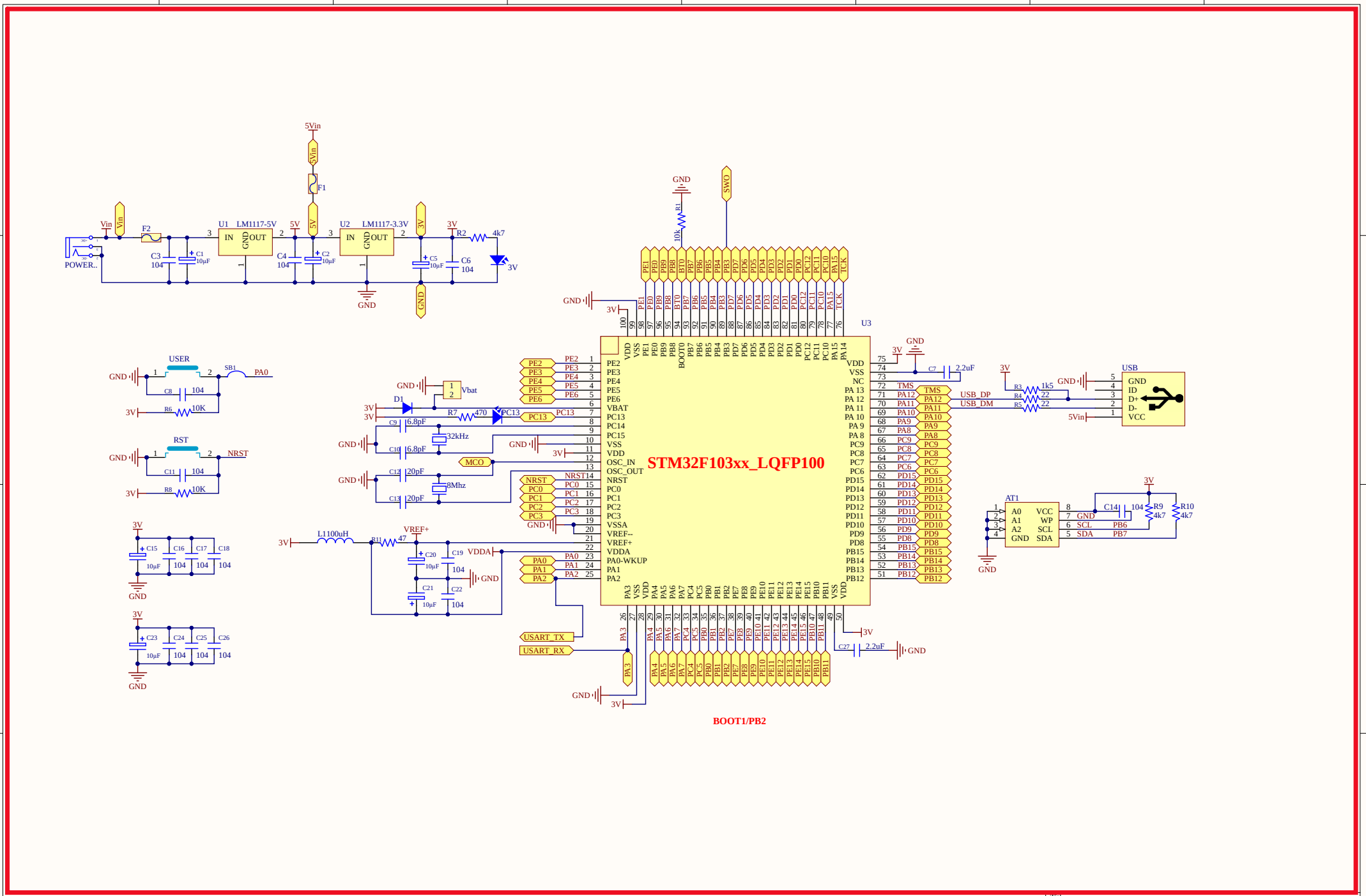

Title		
Size A3	Number	Revision
Date: 12/21/2016	Sheet of	
File: E:\Altium Designer\..\MCU STM32F103V01_LQFP100.SchDoc		

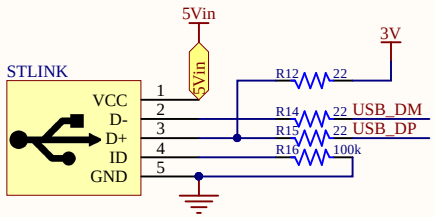

USB ST-LINK

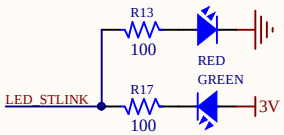

COM

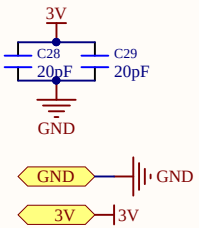

PWR

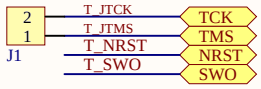

SWD

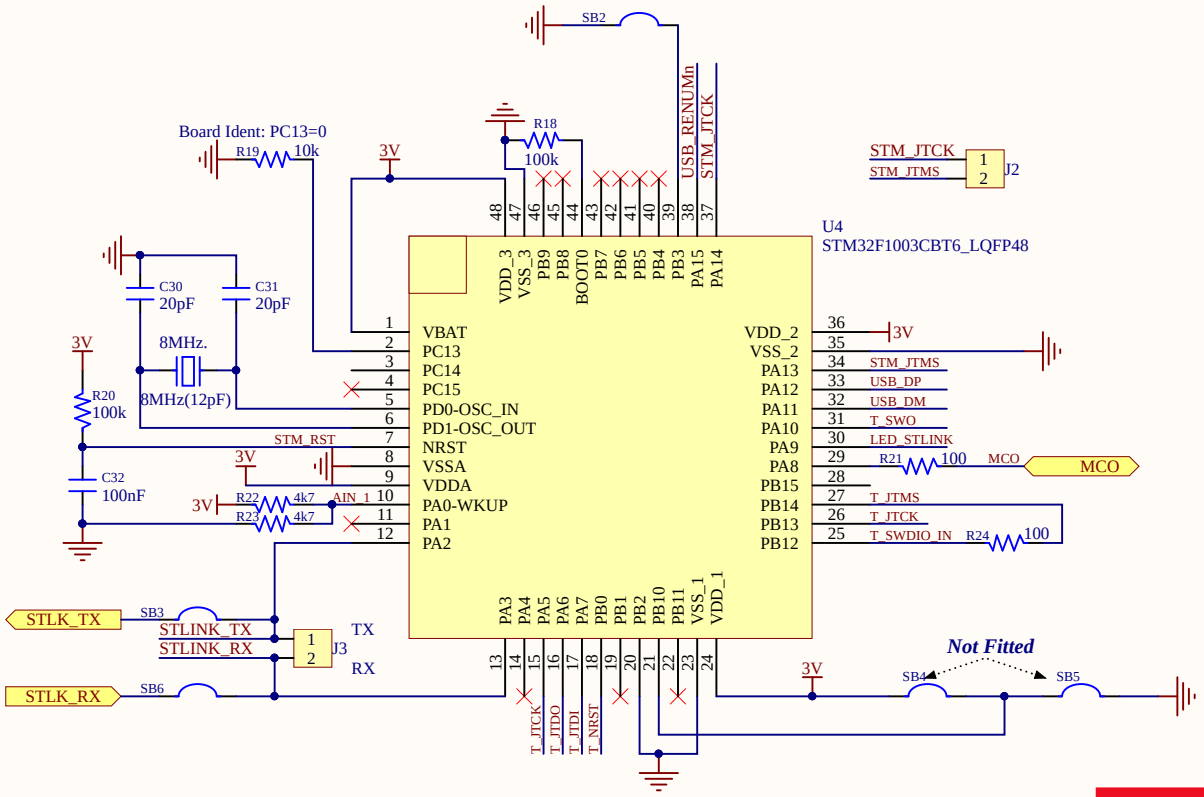

STLINK V2 -MINI

Title		
Size A4	Number	Revision
Date: 12/21/2016	Sheet of	
File: E:\Altium Designer\..\ST_LINK_V2-1.SchDoc	Drawn By:	

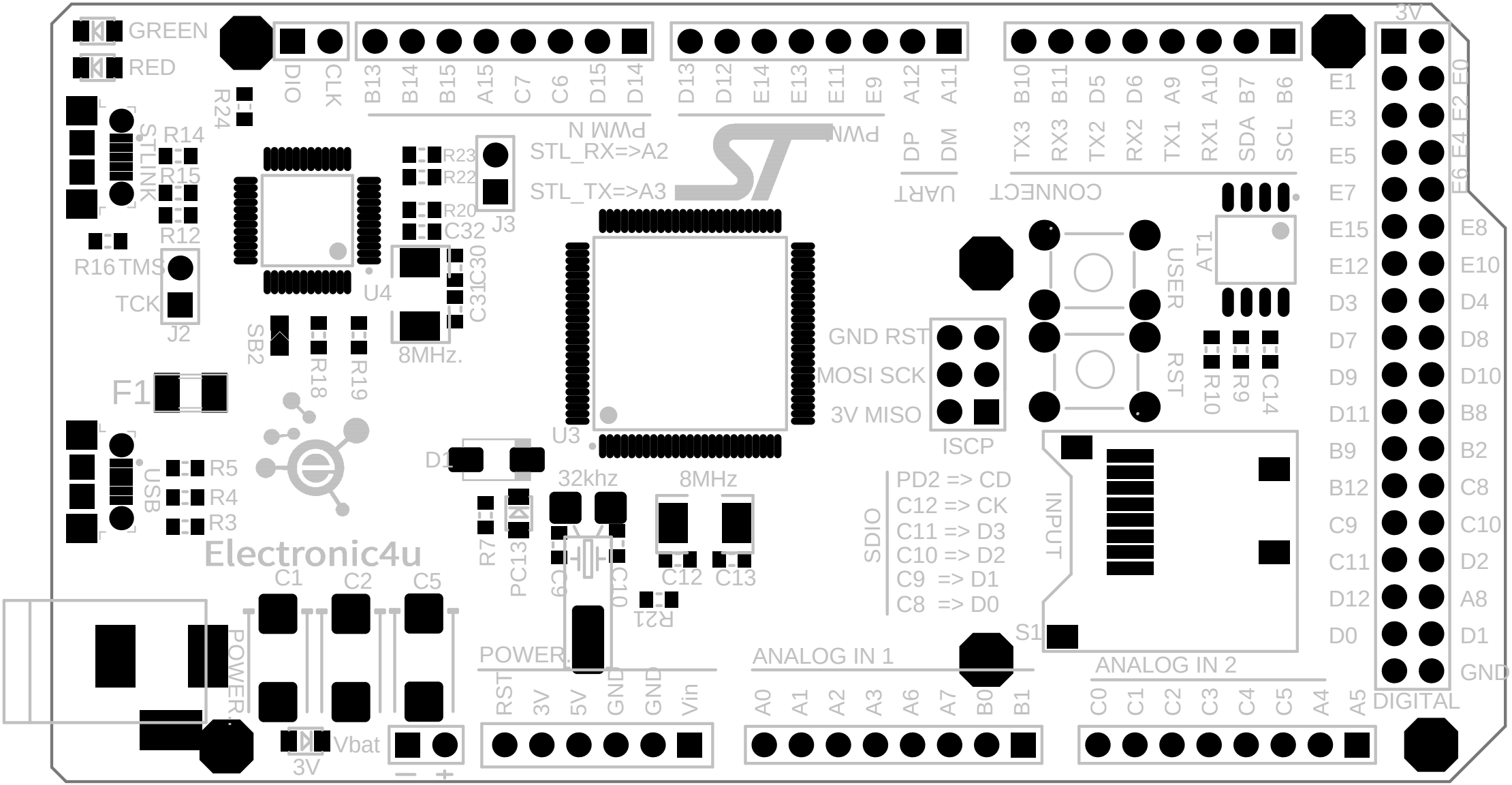
GREEN
RED
R24
DIO
CLK
B13 B14 B15 A15 C7 C6 D15 D14
PWM N
D13 D12 E14 E13 E11 E9 A12 A11
PWM
DP DM
UART
B10 B11 D5 D6 A9 A10 B7 B6
TX3 RX3 TX2 RX2 TX1 RX1 SDA SCL
CONNECT
3V
E1 E3 E5 E7 E15 E12 D3 D7 D9 D11 B9 B12 C9 C11 D12 D0
E0 E2 E4 E6 E8 E10 D4 D8 D10 B8 B2 C8 C10 D2 A8 D1 GND
DIGITAL
STLINK
R14
R15
R12
R16
TMS
TCK
J2
SB2
R18
R19
U4
R23
R22
R20
C32
C30
C31
8MHz.
STL_RX=>A2
STL_TX=>A3
J3
F1
USB
R5
R4
R3
D1
R7
PC13
32khz
C9
C10
8MHz
C12
C13
R21
U3
GND RST
MOSI SCK
3V MISO
ISCP
USER
RST
AT1
R10
R9
C14
INPUT
S1
SDIO
PD2 => CD
C12 => CK
C11 => D3
C10 => D2
C9 => D1
C8 => D0
Electronic4u
C1
C2
C5
POWER
Vbat
3V
POWER
RST 3V 5V GND GND Vin
ANALOG IN 1
A0 A1 A2 A3 A6 A7 B0 B1
ANALOG IN 2
C0 C1 C2 C3 C4 C5 A4 A5

MADE BY MIELIN
U303 LIO4
BOARD MODEL
SB1
R9
C8
R8
C11
SB3
SB6
SB4
SB5
R17
R13
C29
C28
C7
C27
C16
C18
C26
C25
C24
R1
C17
C23
C15
C22
C21
C20
C19
L1
R11
U1
U2
F2
C6
C4
C3
R2

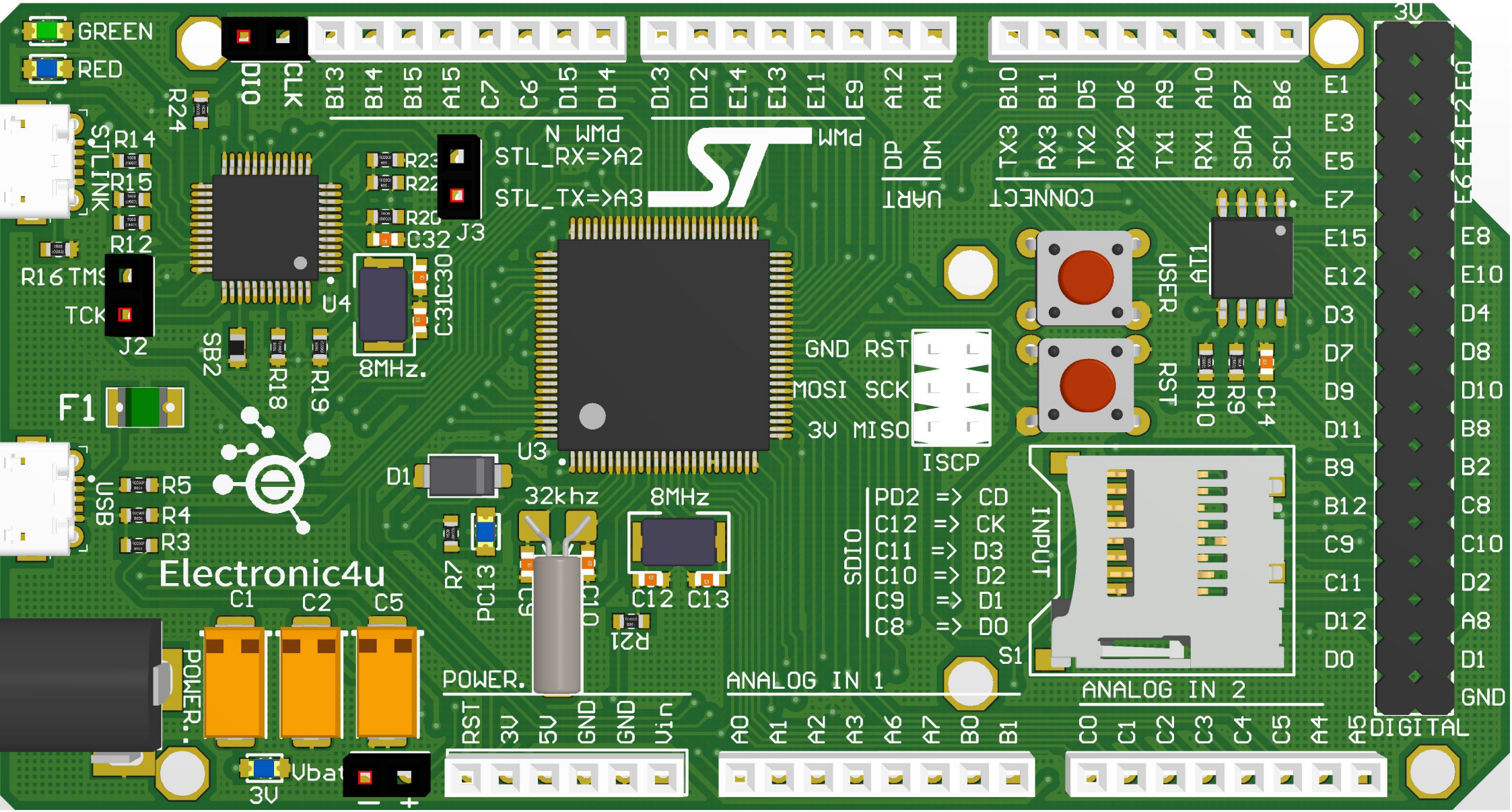
GREEN
RED
R24
R14
R15
R12
R16
TMS
TCK
J2
STLINK
SB2
R18
R19
F1
USB
R5
R4
R3
Electronic4u
C1
C2
C5
POWER..
3V
Vbat
DIO
CLK
B13
B14
B15
A15
C7
C6
D15
D14
D13
D12
E14
E13
E11
E9
A12
A11
B10
B11
D5
D6
A9
A10
B7
B6
N WMd
STL_RX=>A2
STL_TX=>A3
J3
R23
R22
R20
C32
C31
C30
U4
8MHz.
U3
D1
32khz
8MHz
R7
PC13
C9
C10
C12
C13
R21
WMd
DP
DM
UART
TX3
RX3
TX2
RX2
TX1
RX1
SDA
SCL
CONNECT
GND
RST
MOSI
SCK
3V
MISO
ISCP
USER
RST
AT1
R10
R9
C14
PD2 => CD
C12 => CK
C11 => D3
C10 => D2
C9 => D1
C8 => D0
SDIO
INPUT
S1
POWER.
RST
3V
5V
GND
GND
Vin
ANALOG IN 1
A0
A1
A2
A3
A6
A7
B0
B1
ANALOG IN 2
C0
C1
C2
C3
C4
C5
A4
A5
3V
E1
E3
E5
E7
E15
E12
D3
D7
D9
D11
B9
B12
C9
C11
D12
D0
E6
E4
E2
E0
E8
E10
D4
D8
D10
B8
B2
C8
C10
D2
A8
D1
GND
DIGITAL

MADE BY MIEMAN
ETU LT03U
BOARD DRAOB
R17
R13
SB4
SB5
SB6
SB3
C29
C28
C7
C27
C16
C18
C25
C26
C24
R1
C17
C23
C15
C22
C21
C20
C19
L1
R11
U1
TO-252-3
U2
F2
C6
C4
C3
R2
SB1
R6
C8
R8
C11