Ludwig-Maximilian-Universität München - Faculty of Physics

Photonics and Optoelectronics - THz Group

Prof. Dr. Roland Kersting

Development of a System for Gated Van der Pauw Measurements

by Matthieu Mézière

26.02.2024

Contents

1 Introduction **3**
1.1 Principle of the Van der Pauw Method 3
1.2 Measurement System Reqirements 4

2 Implementation of Measurement System **5**

3 Measurement Software **5**
3.1 Program Outline 5
3.2 Batch Files 6
3.3 Graphical User Interface 10

4 Test Circuit Measurement **10**

5 Testing Gated Thin Film Organic Semiconductors **11**

References **12**

A Test Circuit Measurement Results **13**

B Software Source Code **15**
B.1 Preamble 15
B.2 Variable Declarations 15
B.3 Main Procedures 17
B.4 Instrument Communication 23
B.5 Handling Settings Files 26
B.6 Handling Measured Data 30
B.7 Auxiliary Procedures 33

C `CleverCurrent` Function Source Code **35**

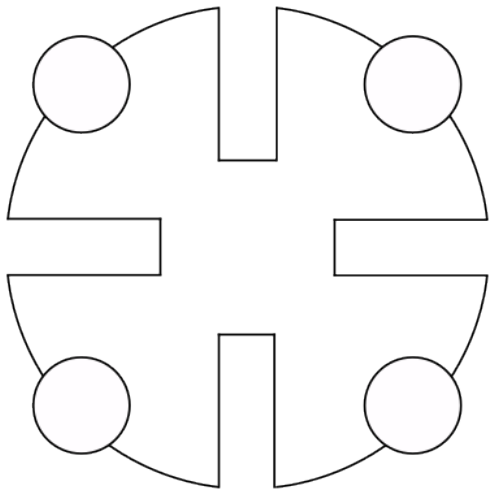

Figure 1: Shape of the semiconductor films

1 Introduction

The THZ Group fabricates organic semiconductor films. The goal is to measure the majority charge carrier mobility using the gated Van der Pauw method.

The semiconductor films are deposited on an insulated gate. The conductance can be modulated by field effect. The film itself has the shape of a four leaf clover, with a metal contact applied to each leaf (figure 1).

1.1 Principle of the Van der Pauw Method

The Van der Pauw method consists of establishing a constant current flow through the semiconductor film. A current I_{34} is sourced and drained at one side of the film. Figure 2 shows the current density profile in the semiconductor, as well as the equipotential lines ϕ_2 and ϕ_1 originating from the two probe contacts (2 and 1). Thus, the voltage V_{21} corresponds to the voltage in the shaded region between contacts 3 and 4. Dividing V_{21} by the sourced current I_{34} yields a resistance R, from which the sheet conductance σ_s can be obtained [1]:

$$\sigma_s = \frac{\ln(2)}{\pi R} \qquad R = \frac{V_{21}}{I_{34}}$$

Majority charge carrier mobility μ can then be calculated using

$$\mu = \frac{\sigma_s}{qn} = \frac{\ln(2)}{qn\pi} \cdot \frac{I_{34}}{V_{21}}$$

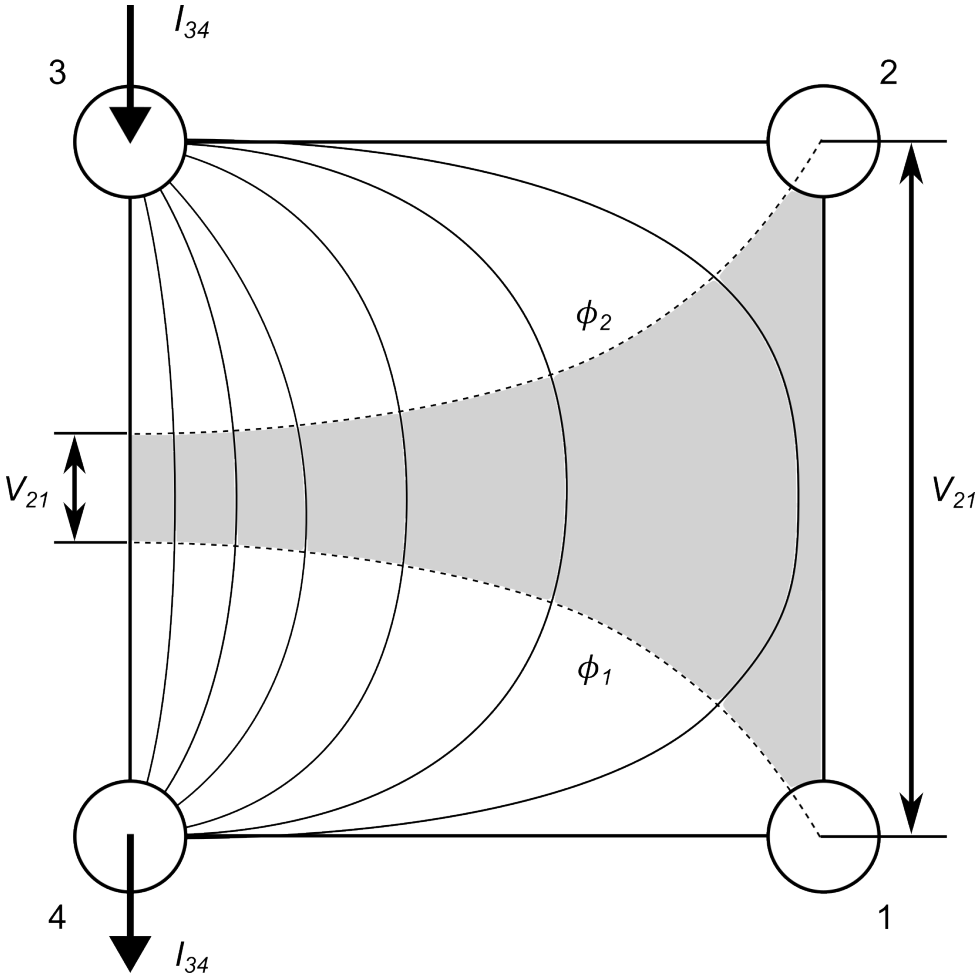

Figure 2: Van der Pauw conductance measurement of a square semiconductor film, showing current streamlines between source and drain (contacts 3 and 4), as well as the region probed between contacts 2 and 1 (gray).

where q is the charge of the majority carriers, and n is their density.

1.2 Measurement System Reqirements

The measurement system has to source a constant current I_{34} to the device under test (DUT) and measure the voltage V_{21}. The measurement is to be performed in dependence of the gate voltage V_{G4}. Using the relation above, conductance σ and charge carrier mobility μ are to be plotted against gate voltages V_{G4}. For safetey reasons, the gate voltage source as well as the current source should be limited.

The software is to be programmed using Microsoft Visual Basic 6. Measurement settings are read from a batch file, measured data is saved along with a log file.

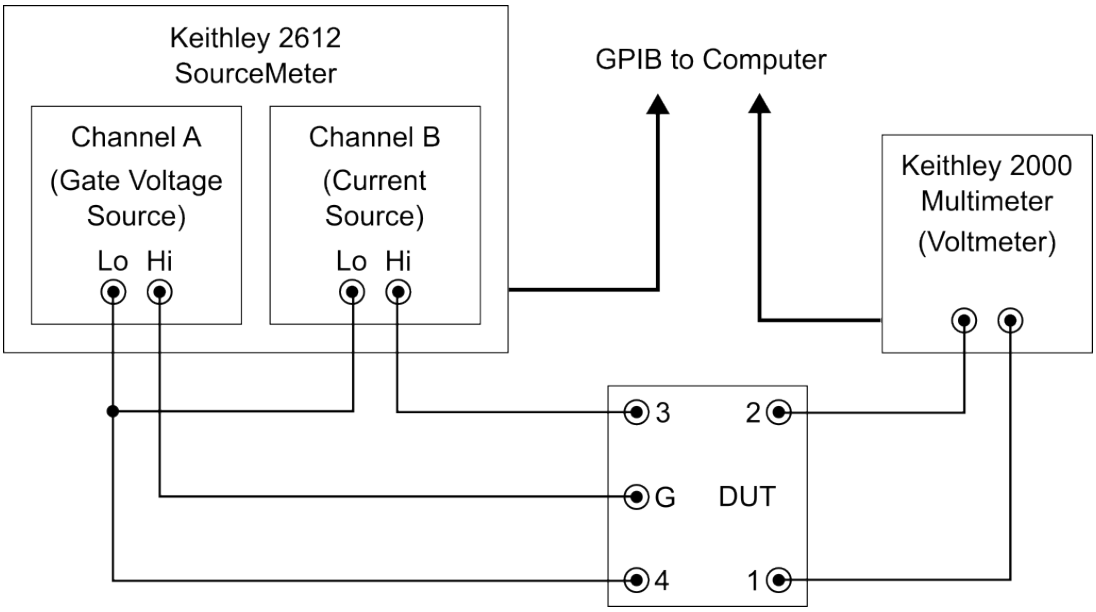

Figure 3: Hardware of Measurement Setup

2 Implementation of Measurement System

The measurement system's hardware is shown in figure 3. The Keithley 2612 SourceMeter unit features two independent channels, as a continuity test between the grounds revealed. Channel A sources the gate voltage V_{G4}, channel B the current I_{34}. The instrument features a compliance limit for each channel, allowing voltage/current limiting. The voltage V_{21} is measured using the Keithley 2000 multimeter. Both instruments communicate via GPIB with the computer running the software.

3 Measurement Software

3.1 Program Outline

The source code of the main program can be found in appendix C.

Upon start, the software loads a generic settings file and establishes GPIB communication with the instruments. The measurement settings are then loaded and checked before assigning the values to their respective variables.

Figure 4 shows the program's measurement procedure, contained in the `MeasLoop` subprocedure.

1. The gate voltage V_{G4} is applied and a current check is performed. The measurement is aborted should the user input current limit be exceeded.
2. The program calls a function called "`CleverCurrent`" (see appendix D for source code) implemented in the "`Keithley2612`" classmodule, represented within the dashed lines in figure 4.
3. The user input source current I_{34} is applied to the DUT.
4. A voltage check is performed. If the preset limit is exceeded, the applied current is halved and the check repeated.
5. Once the current source voltage is within the limit, the function returns the source current applied to the DUT.
6. The voltage V_{21} is measured, and the sheet conductance σ_s calculated. The approximation
$$\frac{\ln(2)}{\pi} \approx 0.220635002$$
is used for the calculation. Majority charge carrier mobility μ will also be calculated at this point in a future version of the software.
7. The data is saved to respective columns in a row of the array `MeasData` as follows:
$$V_{G4} \quad V_{21} \quad I_{34} \quad \sigma_s$$
8. The iteration i is completed by incrementing the counter and the gate voltage V_{G4}:
$$V_{G4}(i+1) = V_{G4}(i) + \frac{V_{G,end} - V_{G,start}}{N_{bins} - 1}$$

The data array is saved in the current directory as a tab seperated value `.dat` file. Plots are generated at each iteration. The plot window is saved as a `.bmp` file (figure 5).

3.2 Batch Files

Upon launch, the user is prompted to specify the directory containg the setting files. Tables 1 and 2 show the contents of both batch files. The data and log file are saved in the same directory as:

`yyyymmddxxx_user initials_sample name_GVdP.dat / .log`

Contents of the log file is shown in table 3.

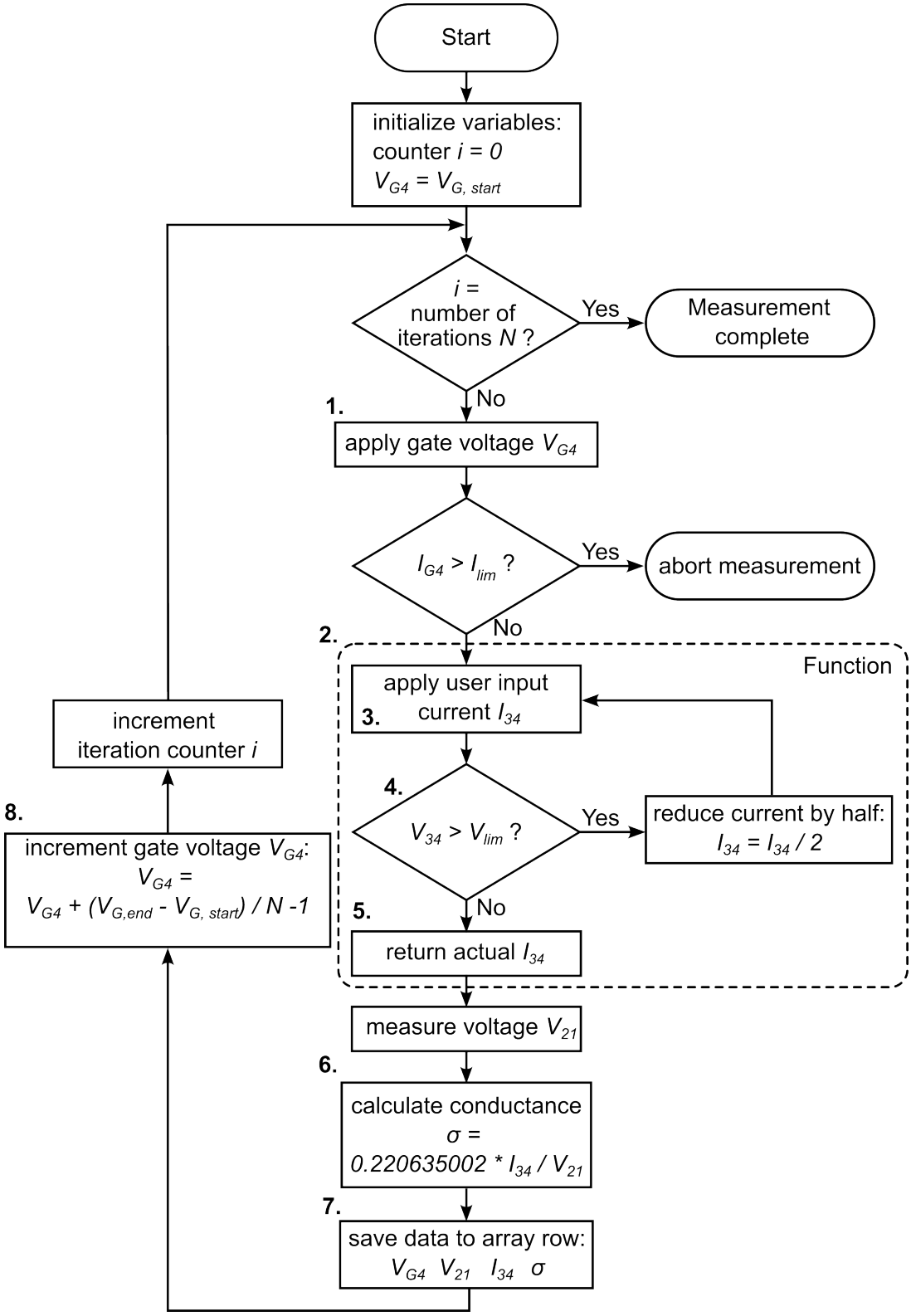

Figure 4: Flow diagram of the measuring procedure.

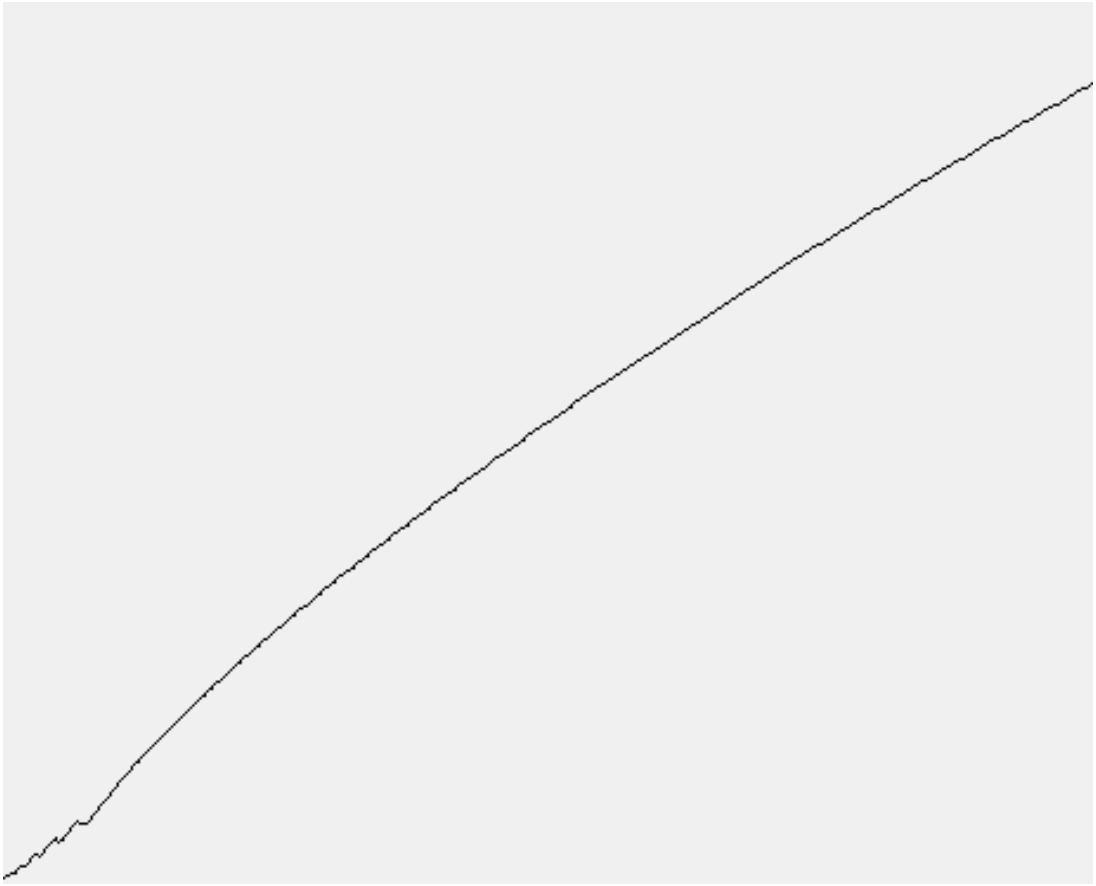

Figure 5: Saved image of plot. Axis labels will be added in a future version.

1	0	GPIB board
2	2	PAD Multimeter
3	7	PAD SourceMeter
4	1	Multimeter Integration Time (0 - slow, 1, 2 - fast)
5	100	Base Wait Time (ms)

Table 1: Contents of `GenericSettings.prm`

1	MM	Str	Initials
2	ALD1106	Str	Sample Name
3	X	Str	Comment 1
4	X	Str	Comment 1
5	X	Str	Comment 2
6	X	Str	Comment 2
7	X	Str	Comment 3
8	X	Str	Comment 3
9	-666	Str	void
10	0.7E+00	Dbl	Initial Gate Voltage (V)
11	6.7E+00	Dbl	Final Gate Voltage (V)
12	301	Lng	Number of Bins
13	1E-04	Dbl	Source Current I_34 (A)
14	8E+00	Dbl	Current Source Limit V_34 max (V)
15	1E-06	Dbl	Gate Voltage Limit I_G4 max (A)

Table 2: Contents of `MeasurementSettings.prm`

20240206002_MM_ALD1106_GVdP	
User Initials:	MM
Sample Name:	ALD1106
Comments:	TEST
	XXX
	XXX
	XXX
	XXX
	XXX
Initial Gate Voltage (V):	0.7
Final Gate Voltage (V):	6.7
Number of Bins:	301
Source Current I_ 34 (A):	1.0E-4
Current Source Limit V_34 max (V): 8.0	
Gate Voltage Source Limit I_G4 max (A):	1.0E-6
Multimeter Integration Time (NPLCs):	0.01
Basic Wait Time (ms):	100
Measurement started:	16:15:22
Measurement completed:	16:17:26

Table 3: Contents of the log file

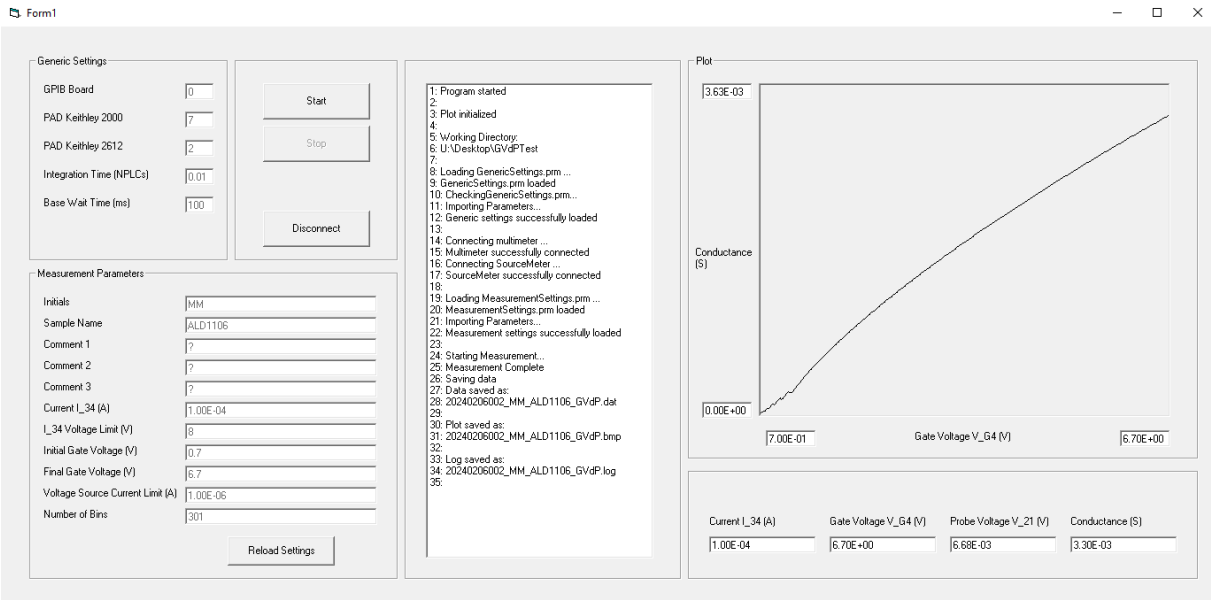

Figure 6: Graphical user interface after performing a measurement on the ALD1106 test cirucit.

3.3 Graphical User Interface

The loaded settings are displayed on the graphical user interface (GUI) (figure 6) for the user to check before launching the measurement procedure.

Status messages are displayed in the list box `List1` and are copied to the `.log` file once the measurement is complete.

The `Start` button launches the measurement procedure, which can be aborted at any time with the `Stop` button. `Disconnect` interrupts GPIB communication and calls the procedure `GoLocal` for each instrument.

4 Test Circuit Measurement

Software development began with a four resistor bridge (1 MΩ each) as a DUT. It was later replaced with a MOSFET circuit (figure 7) to emulate the behaviour of the gated organic semiconductors. The circuit is based on a the quad MOSFET array ALD1106.

Figure 6 shows the GUI after performing a measurement on the test circuit. The settings are shown in table 2, part of the measured data can be found in appendix A.

According the ALD1106's datasheet, the MOSFETs operate in their linear regime at

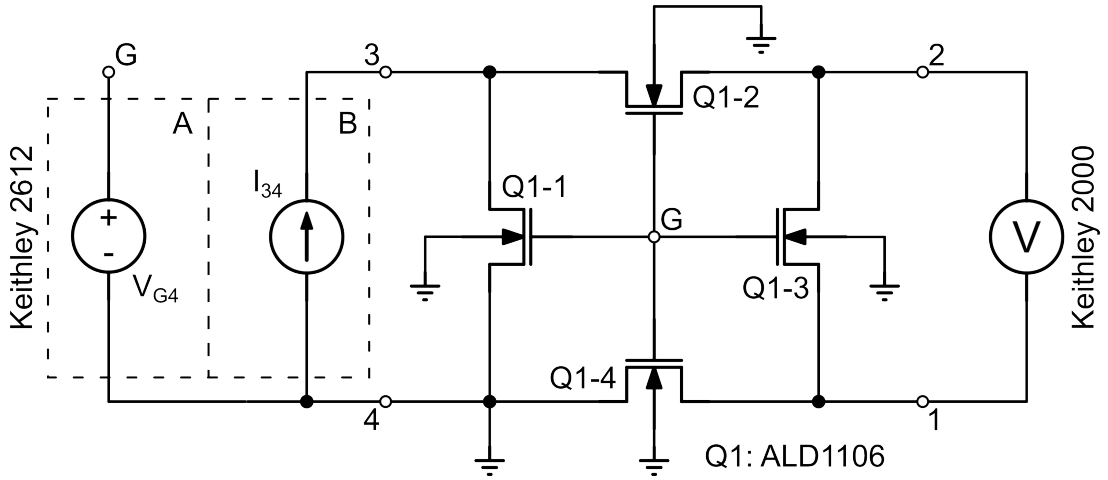

Figure 7: Schematic of the ALD1106 circuit connected to the instruments.

$I_{34} = 100\,\mu\text{A}$ for V_{G4} ranging from $0.7\,\text{V}$ to $6.7\,\text{V}$. The plot in figure 6 (or see figure 5) shows the conductance is linear, as expected.

The datasheet of the ALD1106 specifies a drain source resistance

$$350\,\Omega \leq R_{DS}\,(V_{GS} = 5\,\text{V}) \leq 500\,\Omega$$

At $V_{G4} = 5\,\text{V}$, the software measures a conductance $\sigma \approx 2.552\,\text{mS}$. This equals a drain source resistance of $R_{DS} \approx 392\,\Omega$, which is within datasheet specifications.

5 Testing Gated Thin Film Organic Semiconductors

Measurements on organic semiconductors have not yet been performed.

Assuming a majority charge carrier density of $n = 10^{12}\,\text{cm}^{-2}$ and a low field mobility $\mu_0 = 1.0\,\frac{\text{cm}^2}{\text{Vs}}$, with $q = e = 1.602 \cdot 10^{-19}\,\text{As}$, the sheet conductance of the organic semiconductor films is around

$$\sigma = \mu \cdot n \cdot e = 1.0\,\frac{\text{cm}^2}{\text{Vs}} \cdot 12\,\text{cm}^{-2} \cdot 1.602 \cdot 10^{-19}\,\text{As} = 1.602 \cdot 10^{-7}\,\text{S}$$

Sourcing a current $I_{34} = 1\,\mu\text{A}$ will result in a voltage drop of

$$V_{34} = \frac{I_{34}}{\sigma} = \frac{1.0 \cdot 10^{-6}\,\text{A}}{1.602 \cdot 10^{-7}\,\text{S}} = 6.242\,\text{V}$$

across the DUT. The multimeter then measures

$$V_{21} = V_{34} \cdot \frac{\ln(2)}{\pi} = \frac{1.0 \cdot 10^{-5}\,\mathrm{A} \cdot \ln(2)}{1.602 \cdot 10^{-7}\,\mathrm{S} \cdot \pi} = 1.377\,\mathrm{V}$$

across the probe contacts. To allow for small deviations of the estimated conductance, the voltage limit of the current source could be set at $V_{lim} = 8.0\,\mathrm{V}$.

References

[1] Rolin, C., Kang, E., Lee, JH. et al. (2017). Charge carrier mobility in thin films of organic semiconductors by the gated van der Pauw method. Nat Commun 8, 14975. doi: 10.1038/ncomms14975.

A Test Circuit Measurement Results

20240206002_MM_ALD1106_GVdP.dat

0.7	0.0104767355	0.0000015625	3.2905497196622E-05
0.8	0.016976833	0.00000625	8.12265021691619E-05
0.9	0.047317671	0.000025	1.16571144213755E-04
1	0.0639187008	0.00005	1.72590336817359E-04
1.1	0.0418569706	0.00005	2.63558254261239E-04
1.2	0.0745629218	0.0001	2.95904447778762E-04
1.3	0.0564340985	0.0001	3.9096044388837E-04
1.4	0.0462007635	0.0001	4.7755704729858E-04
1.5	0.0394946835	0.0001	5.58644816080119E-04
1.6	0.0347044883	0.0001	6.35753508574279E-04
1.7	0.0310829605	0.0001	7.0982621491283E-04
1.8	0.0282340151	0.0001	7.81451030675407E-04
1.9	0.0259276322	0.0001	8.50964717094375E-04
2	0.0240156474	0.0001	9.1871353007956E-04
2.1	0.0223792313	0.0001	9.85891780831632E-04
2.2	0.020998763	0.0001	1.05070475818028E-03
2.3	0.0198022452	0.0001	1.11419184931616E-03
2.4	0.0187531267	0.0001	1.17652381669239E-03
2.5	0.0178238223	0.0001	1.23786580839061E-03
2.6	0.0170000355	0.0001	1.29785024272449E-03
2.7	0.01625697	0.0001	1.35717173618454E-03
2.8	0.0155854418	0.0001	1.41564804406122E-03
2.9	0.0149756447	0.0001	1.47329217819918E-03
3	0.0144191626	0.0001	1.53015128631672E-03
3.1	0.0139079694	0.0001	1.58639263327686E-03
3.2	0.0134371899	0.0001	1.64197279075441E-03
3.3	0.0130036236	0.0001	1.69671938212669E-03
3.4	0.0126003822	0.0001	1.75101833022176E-03
3.5	0.0122260264	0.0001	1.80463377700542E-03
3.6	0.0118772572	0.0001	1.85762586668579E-03
3.7	0.0115502378	0.0001	1.91022042853525E-03
3.8	0.0112447194	0.0001	1.96212101121883E-03

3.9	0.0109565311	0.0001	2.01373044065014E-03
4	0.0106863203	0.0001	2.06464896995461E-03
4.1	0.0104311099	0.0001	2.11516323876522E-03
4.2	0.0101900821	0.0001	2.1651935660067E-03
4.3	0.00996054899	0.0001	2.21508876891734E-03
4.39999999999999	0.00974313022	0.0001	2.26451866102637E-03
4.49999999999999	0.00953787955	0.0001	2.3132500346998E-03
4.59999999999999	0.00934219541	0.0001	2.36170399265926E-03
4.69999999999999	0.00915537649	0.0001	2.40989545586672E-03
4.79999999999999	0.00897740784	0.0001	2.4576693621619E-03
4.89999999999998	0.00880770401	0.0001	2.50502289529141E-03
4.99999999999998	0.00864505166	0.0001	2.55215365595629E-03
5.09999999999998	0.0084894127	0.0001	2.59894305762753E-03
5.19999999999998	0.00834156245	0.0001	2.64500809437685E-03
5.29999999999998	0.0081995261	0.0001	2.69082626616677E-03
5.39999999999997	0.00806201799	0.0001	2.73672177702496E-03
5.49999999999997	0.00793011674	0.0001	2.78224153860313E-03
5.59999999999997	0.00780475429	0.0001	2.82693078861807E-03
5.69999999999997	0.00768228672	0.0001	2.8719964515982E-03
5.79999999999996	0.00756571854	0.0001	2.91624649837952E-03
5.89999999999996	0.0074526629	0.0001	2.96048546620833E-03
5.99999999999996	0.00734474141	0.0001	3.00398597695491E-03
6.09999999999996	0.00723828515	0.0001	3.04816676087982E-03
6.19999999999996	0.00713780372	0.0001	3.09107690061278E-03
6.29999999999995	0.00703893991	0.0001	3.13449190959211E-03
6.39999999999995	0.00694517024	0.0001	3.17681200569102E-03
6.49999999999995	0.00685329628	0.0001	3.21939973095691E-03
6.59999999999995	0.00676521146	0.0001	3.26131715622678E-03
6.69999999999995	0.00667814773	0.0001	3.30383529865399E-03

B Software Source Code

B.1 Preamble

```
'#######################################################################
'
'Project:
'
'Author: MM, november 23
'
'Purpose:
'
'Description:
'
'Devices:       - Keithley 2612 Source Meter
'               - Keithley 2000 Multimeter
'
'Classmodules:  - Keithley2000_03.cls
'               - Keithley2612_17.cls
'               - GPIB_Fed.cls
'               - Plot_20.cls
'
'Modules:       - NIGLOBAL.bas
'               - VBIB-32.bas
'               - Goodies_14.bas
'               - FileHandling_28.bas
'               - ArrayHandling_10.bas
'
'#######################################################################
```

B.2 Variable Declarations

```
Option Explicit

Dim MsgCnt As Long              'required for sub MakeMessage(...)
Dim BoolError As Boolean        'true if error occurred during device
```

```
                                  'connection or setting file load
Dim BoolMeasComplete As Boolean 'true when measurement complete
Dim BoolAbort As Boolean        'true if measurement aborted
Dim MeasStepCnt As Long         'counter for measurement steps
Dim BaseWaitTime As Long    'wait time for CleverCurrent function

'Devices
Dim SourceMeter As New Keithley2612
Dim MultiMeter As New Keithley2000

'Device Communication
Dim GPIBboard As Integer        'GPIB board number
Dim PAD2612 As Integer          'Primary Adress of Keithley 2612 SMU
Dim PAD2000 As Integer          'Primary Adress of Keithley 2000 MM
Dim BoolMMconnected As Boolean  'true if Multimeter connected
Dim BoolSMconnected As Boolean  'true if SourceMeter connected

'Filehandling
Dim GenSettingsFilename As String   'Filename of generic settings file
Dim GenSettingsStr() As String      'Contents of generic settings file
Dim MeasSettingsFilename As String  'Filename of measurement
                                    'settings file
Dim MeasSettingsStr() As String     'Contents of measurement
                                    'settings file
Dim MeasDataFileName As String      'Filename of measurement data file
Dim MeasData() As Double            'measured data
Dim CurrDrive As String             'current drive
Dim CurrDir As String               'current directory path
Dim LogStr() As String              'Array for log file

'for Multimeter
Dim MeasuredVoltage As Double       'Voltage measured by Multimeter
                                    'at each step
Dim MMIntTime As Long               'integration time in arbitrary
                                    'units 0,1,2
```

```
Dim MMIntTimeNPLC As Double         'integration time in NPLCs for
                                    'log output


'for SourceMeter
Dim SourceCurrent As Double     'current set by user
Dim SourcedCurrent As Double    'current set by CleverCurrent()
Dim VLim As Double              'Voltage limit
Dim SourceGVoltage As Double    'Gate voltage
Dim ILim As Double              'Current limit for gate voltage source
Dim IlimActive As Boolean       'true if current limit for gate voltage
                                'source is active

'Plots
Dim Plot1 As New Plot           'Plot conductance against V_G4


'Other variabbles specified by parameters in MeasurementSettings.prm
Dim UserInitials As String
Dim SampleName As String
Dim MeasStep As Long            'number of bins
Dim GVoltageStart As Double     'initial gate voltage
Dim GVoltageEnd As Double       'final gate voltage
Dim TimeStart                   'time measurement began
Dim TimeEnd                     'time measurement ended
```

B.3 Main Procedures

```
Private Sub Form_Load()
'Procedures to perform upon launch

    Me.Show
    DoEvents
    MakeMessage ("Program started")
    MakeMessage (" ")
```

```
    'Initialize Plots
    Plot1.Initialize PicturePlot1, TextPlot1(0), TextPlot1(1),
TextPlot1(2), TextPlot1(3)
    MakeMessage ("Plot initialized")
    MakeMessage (" ")

    'Prompt user to select working directory
    CurrDir = BrowseForFolder(0, "Please select working directory")
    CurrDrive = Mid(CurrDir, 1, 2)
    ChDrive CurrDrive
    ChDir CurrDir
    MakeMessage ("Working Directory:")
    MakeMessage (CurrDir)
    MakeMessage (" ")

    'Load settings and establish GPIB communication
    LoadGenericSettings
    CheckGenericSettings
    Com_Connect_Click
    Com_Load_Click

End Sub
'-----------------------------------------------------------------------

Private Sub Com_Start_Click()
'Initiate measurement and save data to MeasData() array row
'when start button is clicked

    MakeMessage ("Starting Measurement...")
    Com_Start.Enabled = False
    Com_Stop.Enabled = True
    BoolMeasComplete = False
    BoolAbort = False
```

```
    'set MeasData array size
    ReDim MeasData(MeasStep - 1, 3)

    DeviceSetup

    'record measurement start time (for log)
    TimeStart = Time

    'Perform Measurement
    MeasLoop

    'Save Measurement and switch instrument outputs off (Com_Stop_Click)
    If BoolAbort = False Then
        BoolMeasComplete = True
        Com_Stop_Click
        PlotData
        SaveData
    End If

    Com_Start.Caption = "Start"

End Sub
'-----------------------------------------------------------------------

Private Sub MeasLoop()
'Procedure actually performing measurement

    'initialize counter and gate voltage
    SourceGVoltage = GVoltageStart
    MeasStepCnt = 0

    Do Until MeasStepCnt >= MeasStep Or BoolAbort = True

        'Display measurement progress in start button
        Com_Start.Caption = MeasStepCnt & "/" & MeasStep
```

```
        'Apply Gate Voltage V_G4
        SourceMeter.ApplyVolt "A", SourceGVoltage
        'Switch channel on if first iteration
        If MeasStepCnt = 0 Then
            SourceMeter.SwitchChanOn "A"
        End If

        'Check gate voltage source current
        IlimActive = SourceMeter.ChkLimitAvtive("A")
        If IlimActive = True Then
            MakeMessage ("Gate voltage source exceeded current Limit!")
            Com_Stop_Click
            Exit Do
        End If

        'Switch channel on if first iteration
        SourceMeter.ApplyCurr "B", 0
        If MeasStepCnt = 0 Then
            SourceMeter.SwitchChanOn "B"
        End If

        'Reduce Source Current I_34 to fit voltage limit
        SourcedCurrent = SourceMeter.CleverCurrent("B", SourceCurrent,
BaseWaitTime)

        'measure V_21
        MeasuredVoltage = MultiMeter.MeasDCVolt

        'Save Data to data array
        MeasData(MeasStepCnt, 0) = SourceGVoltage
        MeasData(MeasStepCnt, 1) = MeasuredVoltage
        MeasData(MeasStepCnt, 2) = SourcedCurrent

        'Calculate Conductance
```

```
        MeasData(MeasStepCnt, 3) = 0.220635002 * SourcedCurrent /
MeasuredVoltage

'Display Current Measurement
        Text3(0).text = Format(MeasData(MeasStepCnt, 2), "scientific")
        Text3(1).text = Format(MeasData(MeasStepCnt, 0), "scientific")
        Text3(2).text = Format(MeasData(MeasStepCnt, 1), "scientific")
        Text3(3).text = Format(MeasData(MeasStepCnt, 3), "scientific")

        'Plot Data
        If MeasStepCnt >= 2 Then
            PlotData
        End If

        'increment counter and gate voltage
        SourceGVoltage = SourceGVoltage + (GVoltageEnd - GVoltageStart) /
(MeasStep - 1)
        MeasStepCnt = MeasStepCnt + 1
        DoEvents
    Loop

End Sub
'-----------------------------------------------------------------------

Private Sub Com_Stop_Click()
'Switch device outputs OFF when measurement complete or aborted

'Decide wether measurement was completed or aborted
    Select Case BoolMeasComplete
    Case True

        'record time measurement completed
        TimeEnd = Time

        MakeMessage ("Measurement Complete")
```

```
        GoTo OutputsOff
    Case False
        MakeMessage ("Aborting Measurement")
        BoolAbort = True
    End Select

    'Set ouputs to zero and switch channels of
OutputsOff:
    SourceMeter.ApplyCurr "B", 0
    SourceMeter.SwitchChanOff "B"
    SourceMeter.ApplyVolt "A", 0
    SourceMeter.SwitchChanOff "A"

    'Disable Stop button and make start button clickable
    Com_Stop.Enabled = False
    Com_Start.Enabled = True

    If BoolAbort = True Then
        MakeMessage ("Measurement aborted")
        MakeMessage (" ")
    End If

End Sub
'-----------------------------------------------------------------------

Private Sub DeviceSetup()
'Prepare instruments
'Assign functions to channels, limits and operating ranges

    'Current Source Setup
    SourceMeter.SetSourceFunc "B", "I"
    SourceMeter.SetSourceAutorange "B", "I", True
    SourceMeter.SetVoltLimit "B", VLim

    'Gate Voltage Source Setup
```

```
    SourceMeter.SetSourceFunc "A", "V"
    SourceMeter.SetSourceAutorange "A", "V", True
    SourceMeter.SetCurrLimit "A", ILim

    'Multimeter Setup
    MultiMeter.SetIntegrTime MMIntTime
    MultiMeter.SetDCVoltRange Autorange

End Sub
'-----------------------------------------------------------------------

Private Sub Com_Load_Click()
'Load measurement settings or load them again when reload button clicked

    LoadMeasurementSettings
    CheckMeasurementSettings

    'display imported measurement settings
    DisplayToForm

    'make start and reload buttons clickable if no errors occured and
    'instruments are connected
    If BoolError = False And BoolMMconnected = True
And BoolSMconnected = True Then
    Com_Start.Enabled = True
    Com_Load.Enabled = True
    End If

End Sub
'-----------------------------------------------------------------------
```

B.4 Instrument Communication

```
Private Sub Com_Connect_Click()
'Purpose: establish GPIB connection to devices.
```

```
'connect Keithley 2000 Multimeter
BoolMMconnected = MultiMeter.IsConnected
MultiMeter.SetTheBoardNumber (GPIBboard)
MultiMeter.SetThePad (PAD2000)
MakeMessage ("Connecting multimeter ...")
MultiMeter.DoConnect

'Check multimeter is connected
BoolMMconnected = MultiMeter.IsConnected

If BoolMMconnected = True Then
    MakeMessage ("Multimeter successfully connected")
Else
    MakeMessage ("Connection to Multimeter failed")
    Exit Sub
End If

'connect Keithley 2612 SourceMeter
SourceMeter.SetTheBoardNumber (GPIBboard)
SourceMeter.SetThePad (PAD2612)
MakeMessage ("Connecting SourceMeter ...")
SourceMeter.DoConnect
BoolSMconnected = SourceMeter.IsConnected

'check sourcemeter is connected
If BoolSMconnected = True Then
    MakeMessage ("SourceMeter successfully connected")
Else
    MakeMessage ("Connection to SourceMeter failed")
    Exit Sub
End If

MakeMessage (" ")
```

```
End Sub
'-----------------------------------------------------------------------

Private Sub Com_Disconnect_Click()
'Disconnect both instruments and enable front panel operation (GoLocal)

'Check multimeter is connected and disconnect
    If BoolMMconnected = True Then
        MakeMessage ("Disconecting Multimeter ...")
        MultiMeter.GoLocal
        MultiMeter.DoDisconnect

        'Check if instrument is disconnected
        BoolMMconnected = MultiMeter.IsConnected
        If BoolMMconnected = False Then
            MakeMessage ("Multimeter disconnected")
        Else
            MakeMessage ("Communication Error")
        End If
    End If

'Check sourcemeter is connected and disconnect
    If BoolSMconnected = True Then
        MakeMessage ("Diconnecting Sourcemeter ...")
        SourceMeter.GoLocal
        SourceMeter.DoDisconnect

        'Check if instrument is disconnected
        BoolSMconnected = SourceMeter.IsConnected
        If BoolSMconnected = False Then
            MakeMessage ("SourceMeter disconnected")
        Else
            MakeMessage ("Communication Error")
        End If
    End If
```

```
'disable GUI buttons once instruments are disconnected
    If BoolSMconnected = False And BoolMMconnected = False Then
        Com_Disconnect.Enabled = False
        Com_Start.Enabled = False
    End If

    MakeMessage (" ")

End Sub
'-----------------------------------------------------------------------
```

B.5 Handling Settings Files

```
Private Sub LoadGenericSettings()
'load the GenericSettings.prm file

    Dim MyBool As Boolean

    'specify filename of generic settings file
    GenSettingsFilename = "GenericSettings.prm"
    MakeMessage ("Loading " & GenSettingsFilename & " ...")

    'Check if file exists
    MyBool = FileExists(GenSettingsFilename)
    If MyBool = False Then
        MakeMessage ("Couldn't find " & GenSettingsFilename)
        BoolError = True
        Exit Sub
    End If

    'Load file and copy contents to string array GenSettingsStr
    IOFileRead GenSettingsFilename, GenSettingsStr, , False
    MakeMessage (GenSettingsFilename & " loaded")
```

```
End Sub
'-----------------------------------------------------------------------

Private Sub CheckGenericSettings()
'Check format of generic settings file and copy parameters

    Dim i As Long, lbx As Long, ubx As Long

    'skip file check if GenericSettings.prm doesn't exist
    If BoolError = True Then
        Exit Sub
    End If


    MakeMessage ("Checking" & GenSettingsFilename & "...")

    'required for iteration in array
    lbx = LBound(GenSettingsStr, 1)
    ubx = UBound(GenSettingsStr, 1)

    'Check GenericSettings.prm contains numeric values
    For i = lbx To ubx
        If IsNumeric(GenSettingsStr(i, 2)) = False Then
            BoolError = True
            MsgBox ("Error in " & GenSettingsFilename & ", line " & i
& ". Non numeric value.")
            MakeMessage ("Error in " & GenSettingsFilename)
            Exit Sub
        End If
    Next i

    'Check input Integration Rate value is allowed
    If GenSettingsStr(4, 2) > 2 Then
        BoolError = True
        MsgBox ("Error in " & GenSettingsFilename & ", line 4. Wrong
```

```
Integration Rate, use 0 (slow), 1 or 2 (fast).")
        MakeMessage ("Error in " & GenSettingsFilename)
        Exit Sub
    End If

    'Check basic wait time is not less than 100ms
    If GenSettingsStr(5, 2) < 100 Then
        BoolError = True
        MsgBox ("Error in " & GenSettingsFilename & ", line 5. Base Wait
Time under 100ms.")
        MakeMessage ("Error in " & GenSettingsFilename)
        Exit Sub
    End If

    'Copy Parameters from string array to variables
    MakeMessage ("Importing Parameters...")
    GPIBboard = CInt(GenSettingsStr(1, 2))
    PAD2000 = CInt(GenSettingsStr(2, 2))
    PAD2612 = CInt(GenSettingsStr(3, 2))
    MMIntTime = CLng(GenSettingsStr(4, 2))
    BaseWaitTime = CLng(GenSettingsStr(5, 2))

    MakeMessage ("Generic settings successfully loaded")
    MakeMessage (" ")

End Sub
'-----------------------------------------------------------------------

Private Sub LoadMeasurementSettings()
'load the MeasurementSettings.prm file

    Dim MyBool As Boolean

    'specify filename of settings file
    MeasSettingsFilename = "MeasurementSettings.prm"
```

```
    MakeMessage ("Loading " & MeasSettingsFilename & " ...")

    'Check if file exists
    MyBool = FileExists(MeasSettingsFilename)
    If MyBool = False Then
        MakeMessage ("Couldn't find " & MeasSettingsFilename)
        BoolError = True
        Exit Sub
    End If

    'Load file and copy contents to string array MeasSettingsStr
    IOFileRead MeasSettingsFilename, MeasSettingsStr, , False
    MakeMessage (MeasSettingsFilename & " loaded")

End Sub
'-----------------------------------------------------------------------

Private Sub CheckMeasurementSettings() 'Work in Progress
'check the MeasurementSettings.prm file contents and format and
'assign the parameters to their variables

    Dim i As Long, lbx As Long, ubx As Long
    Dim j As Long, lby As Long, uby As Long

    If BoolError = True Then
        Exit Sub
    End If

    'required for array iterations
    lbx = LBound(MeasSettingsStr, 1)
    ubx = UBound(MeasSettingsStr, 1)
    lby = LBound(MeasSettingsStr, 2)
    uby = UBound(MeasSettingsStr, 2)

    'Check MeasurementSettings
```

```
    'not implemented yet

    'Copy Parameters from string array to variables
    MakeMessage ("Importing Parameters...")

    SourceCurrent = CDbl(MeasSettingsStr(13, 2))
    VLim = CDbl(MeasSettingsStr(14, 2))
    ILim = CDbl(MeasSettingsStr(15, 2))
    MeasStep = CLng(MeasSettingsStr(12, 2))
    GVoltageStart = CDbl(MeasSettingsStr(10, 2))
    GVoltageEnd = CDbl(MeasSettingsStr(11, 2))
    SampleName = CStr(MeasSettingsStr(2, 2))
    UserInitials = CStr(MeasSettingsStr(1, 2))

    'Define name of data file to be output once measurement is completed
    'filename is changed again in SaveData sub
    MeasDataFileName = UserInitials & "-" & SampleName & "_GVdP"

    MakeMessage ("Measurement settings successfully loaded")
    MakeMessage (" ")

End Sub
'-----------------------------------------------------------------------
```

B.6 Handling Measured Data

```
Private Sub PlotData()
'Plot the measured data in imagebox

    '1x1 Array containing column number of Data Array to plot:
    Dim ycols() As Long

    Dim yMin As Double, yMax As Double
    Dim PlotDataArray() As Double
    Dim i As Long, j As Long
```

```
    ReDim ycols(1 To 1)
    ycols(1) = 3

    'Copy Data from MeasData array to private plot array
    ReDim PlotDataArray(MeasStepCnt - 1, 3)
    For i = 0 To MeasStepCnt - 1
        For j = 0 To 3
            PlotDataArray(i, j) = MeasData(i, j)
        Next j
    Next i

    'plot data
    yMax = FindMaxOf2DArr(PlotDataArray, ycols) * 1.1
    yMin = 0
    Plot1.PlotLineLimitsRK PlotDataArray, 0, ycols, GVoltageStart,
GVoltageEnd, yMin, yMax

End Sub
'-----------------------------------------------------------------------

Private Sub SaveData()
'save measured data to a .dat file
'save plot as bitmap image
'save .log file

    'Save data
    MakeMessage ("Saving data")

    'add prefix to filename according to THZ Group rules
    MeasDataFilePath = CreateMeasFilePathWithID(CurrDir & "\" &
MeasDataFileName & ".dat")

    IOFileWrite MeasData, 2, MeasDataFilePath
    MeasDataFileName = ExtractFileBase(MeasDataFilePath)
    MakeMessage ("Data saved as:")
```

```
    MakeMessage (MeasDataFileName & ".dat")
    MakeMessage (" ")
    'Save plot
    SavePicture PicturePlot1.Image, (MeasDataFileName & ".bmp")
    MakeMessage ("Plot saved as:")
    MakeMessage (MeasDataFileName & ".bmp")
    MakeMessage (" ")
    'Save log
    GenerateLog
    IOFileWrite LogStr, 2, MeasDataFileName & ".log"
    MakeMessage ("Log saved as:")
    MakeMessage (MeasDataFileName & ".log")
    MakeMessage (" ")

End Sub
'-----------------------------------------------------------------------

Private Sub GenerateLog()
'Generate log file containing settings

    Dim j As Long

    ReDim LogStr(21, 1)
    LogStr(0, 0) = MeasDataFileName

    'User Settings
    LogStr(2, 0) = "User Initials:"
    LogStr(2, 1) = UserInitials
    LogStr(3, 0) = "Sample Name:"
    LogStr(3, 1) = SampleName
    LogStr(4, 0) = "Comments:"

    'Comments
    For j = 3 To 8
        LogStr(j + 1, 1) = MeasSettingsStr(j, 2)
```

```
    Next j

    LogStr(11, 0) = "Initial Gate Voltage (V):"
    LogStr(11, 1) = GVoltageStart
    LogStr(12, 0) = "Final Gate Voltage (V):"
    LogStr(12, 1) = GVoltageEnd
    LogStr(13, 0) = "Number of Bins:"
    LogStr(13, 1) = MeasStep
    LogStr(14, 0) = "Source Current I_34 (A):"
    LogStr(14, 1) = SourceCurrent
    LogStr(15, 0) = "Current Source Limit V_34 max (V):"
    LogStr(15, 1) = VLim
    LogStr(16, 0) = "Gate Voltage Source Limit I_G4 max (A):"
    LogStr(16, 1) = ILim

     'MM integration time
    LogStr(17, 0) = "Multimeter Integration Time (NPLCs):"
    LogStr(17, 1) = MMIntTimeNPLC

    'BaseWaitTime
    LogStr(18, 0) = "Basic Wait Time (ms):"
    LogStr(18, 1) = BaseWaitTime

    'Time at Start and end
    LogStr(20, 1) = TimeStart
    LogStr(21, 1) = TimeEnd
    LogStr(20, 0) = "Measurement started:"
    LogStr(21, 0) = "Measurement completed:"

End Sub
'-----------------------------------------------------------------------
```

B.7 Auxiliary Procedures

```
Public Sub DisplayToForm()
```

```
    'Generic Settings
    Text1(0).text = GPIBboard
    Text1(1).text = PAD2612
    Text1(2).text = PAD2000
    Select Case MMIntTime
    Case 0
        Text1(3).text = 10
    Case 1
        Text1(3).text = 1
    Case 2
        Text1(3).text = 0.01
    End Select
    Text1(4).text = BaseWaitTime


    'Measurement Settings
    Text2(5).text = Format(SourceCurrent, "scientific")
    Text2(6).text = VLim
    Text2(9).text = Format(ILim, "scientific")
    Text2(10).text = MeasStep
    Text2(7).text = GVoltageStart
    Text2(8).text = GVoltageEnd
    Text2(0).text = UserInitials
    Text2(1).text = SampleName


End Sub
'-----------------------------------------------------------------------

Private Sub MakeMessage(myText)
'Purpose: make a message in Listbox 1, author: RK

    'a) clear list if list is too long
    'If List1.ListCount > 20 Then
```

```
    '    List1.Clear
    'End If

    'b) make output
    MsgCnt = MsgCnt + 1
    myText = MsgCnt & ": " & myText
    List1.AddItem myText

    'z) and do it right now
    DoEvents

End Sub
'-----------------------------------------------------------------------
```

C CleverCurrent Function Source Code

```
Public Function CleverCurrent(MyChannel As String,
DesiredCurrent As Double, WaitTime As Long) As Double
'purpose: reduce source current by half when compliance limit triggered.
'         Loop until voltage is within limits and return the new current.

    Dim CheckLimit As String
    Dim ApplyCurrent As String
    Dim BoolLimitActive As Boolean
    Dim MyCurrent As Double

    '0) Checks
    If MyChannel <> "A" And MyChannel <> "B" Then
        MsgBox ("Wrong channel")
    End If

    '1) Define Commands for SMU and select cases
    If MyChannel = "A" Then
        CheckLimit = "print(smua.source.compliance)"
```

```
        ApplyCurrent = "smua.source.leveli = "
    ElseIf MyChannel = "B" Then
        CheckLimit = "print(smub.source.compliance)"
        ApplyCurrent = "smub.source.leveli = "
    End If

    'Apply desired current
    Keith2612 = ApplyCurrent & DesiredCurrent
    MyCurrent = DesiredCurrent

    '2) Have the SMU check wether compliance limit is triggered
    Keith2612 = CheckLimit
    BoolLimitActive = Keith2612

    '3) Reduce the current by half until limit not triggered
    Do While BoolLimitActive = True
        MyCurrent = MyCurrent / 2
        Keith2612 = ApplyCurrent & MyCurrent
        Keith2612 = CheckLimit
        BoolLimitActive = Keith2612
    Loop

    CleverCurrent = MyCurrent

End Function
```