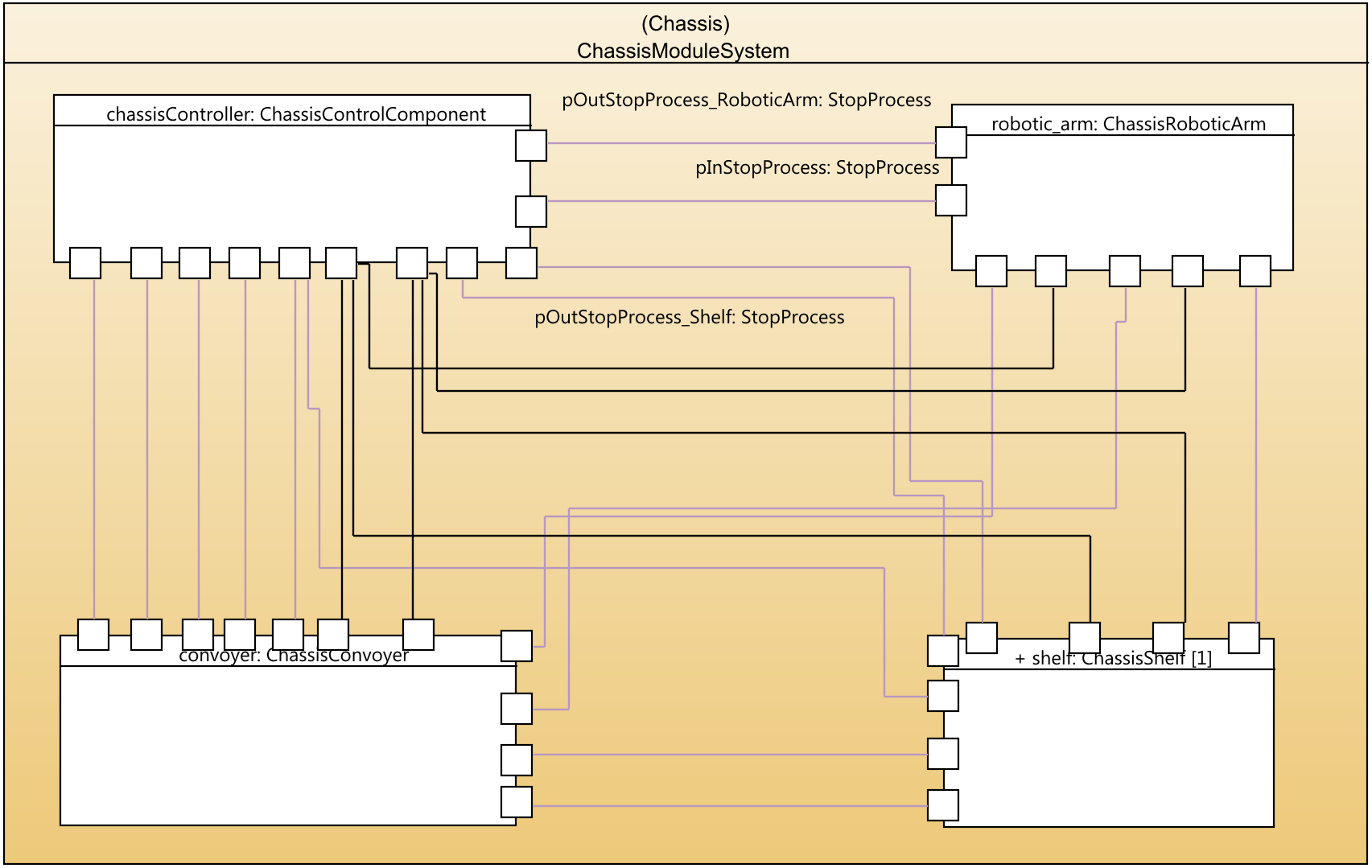
(Chassis)
ChassisModuleSystem
chassisController: ChassisControlComponent
pOutStopProcess_RoboticArm: StopProcess
robotic_arm: ChassisRoboticArm
pInStopProcess: StopProcess
pOutStopProcess_Shelf: StopProcess
convoyer: ChassisConvoyer
+ shelf: ChassisShelf [1]