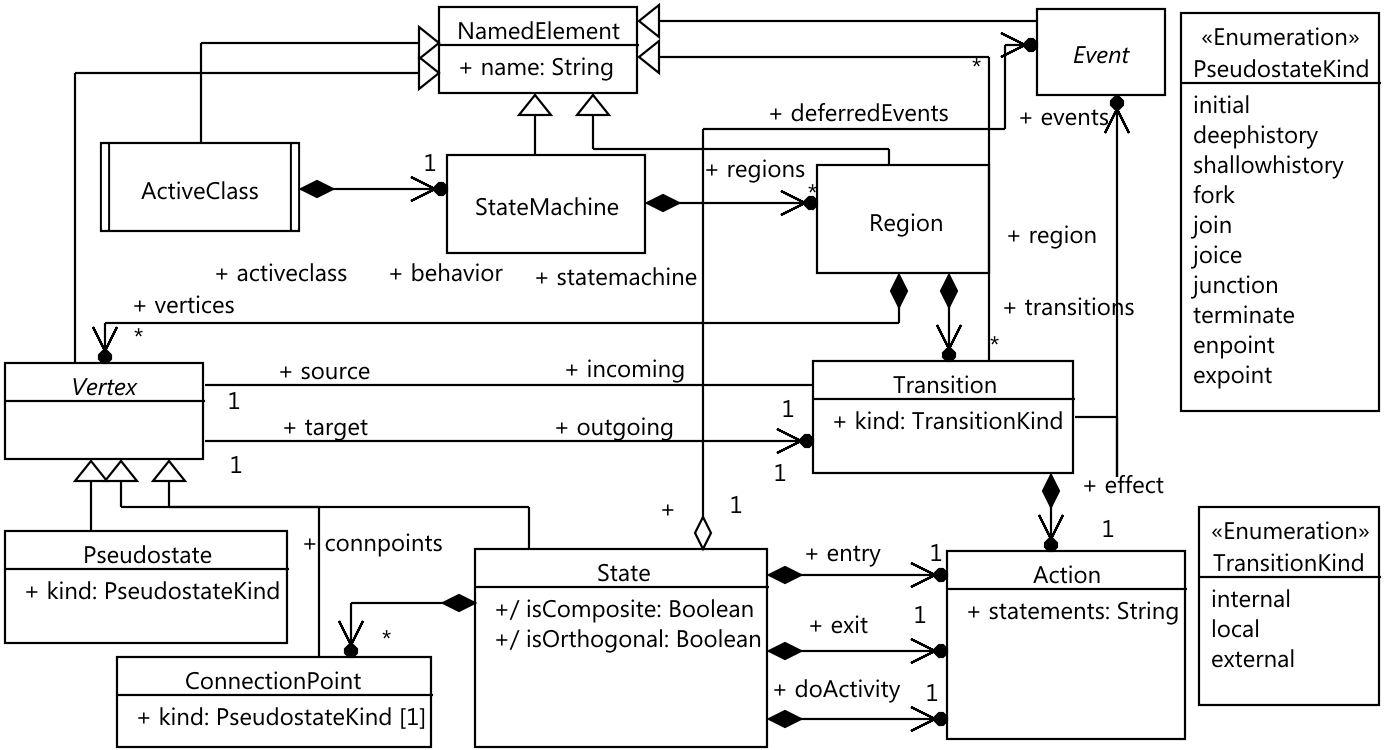
NamedElement
+ name: String
Event
«Enumeration»
PseudostateKind
initial
deephistory
shallowhistory
fork
join
joice
junction
terminate
enpoint
expoint
ActiveClass
StateMachine
Region
+ deferredEvents
+ events
+ regions
+ region
+ activeclass
+ behavior
+ statemachine
+ vertices
+ transitions
Vertex
+ source
+ incoming
+ target
+ outgoing
Transition
+ kind: TransitionKind
+ effect
Pseudostate
+ kind: PseudostateKind
+ connpoints
State
+/ isComposite: Boolean
+/ isOrthogonal: Boolean
+ entry
+ exit
+ doActivity
Action
+ statements: String
«Enumeration»
TransitionKind
internal
local
external
ConnectionPoint
+ kind: PseudostateKind [1]