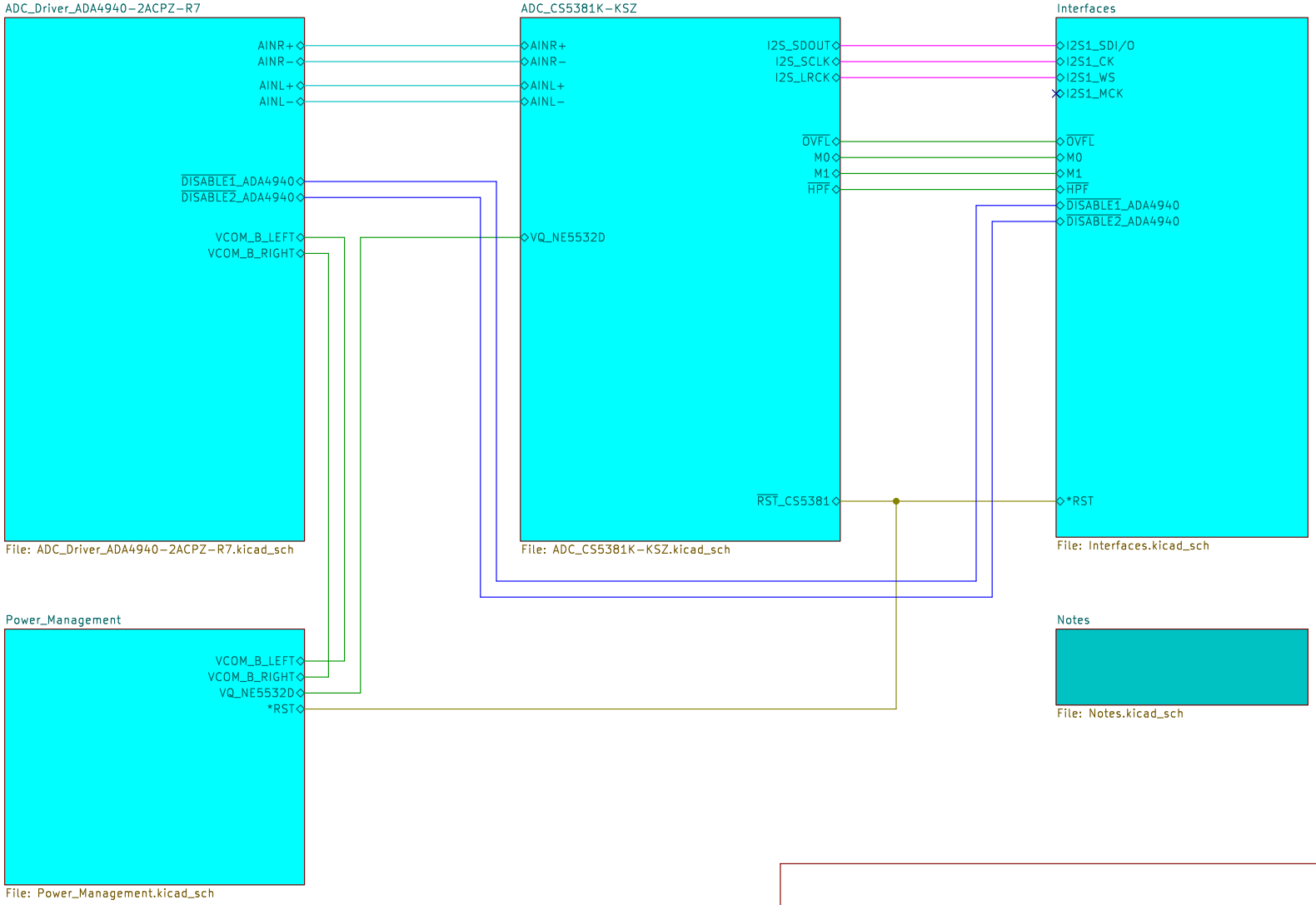

Peter Hancak

Sheet: /

File: ADC_CS5381KKSZ_Board.kicad_sch

Title: ADC CS5381 Board

Size: USLetter	Date: 2026-03-15	**Rev: A**
KiCad E.D.A. 8.0.6		Id: 1/6

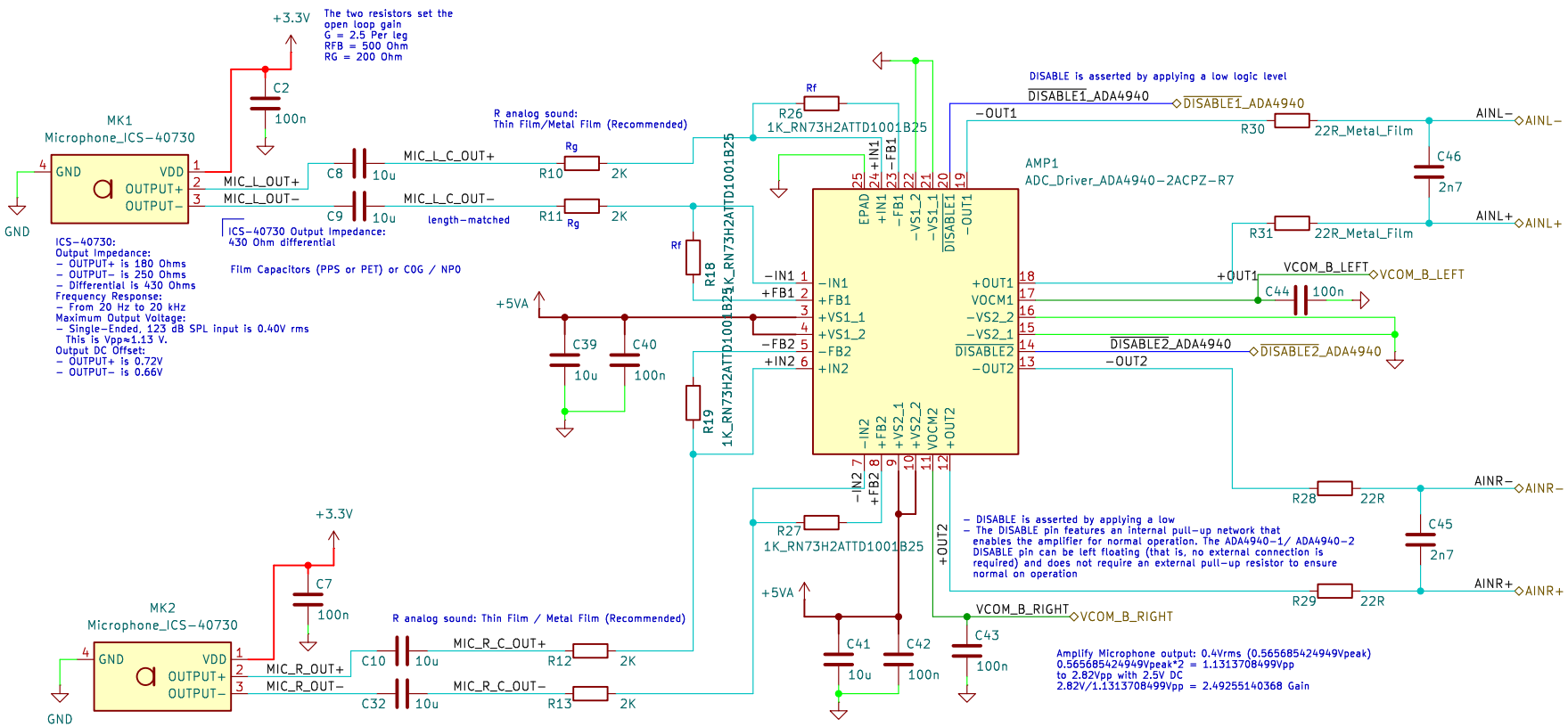

Dielectric Absorption (Ceramic Capacitor Distortions)
- For any capacitor actually touching the audio signal, use Film capacitors (Polypropylene is king) or C0G/NP0 ceramics. These are stable and won't "color" or crackle the sound.

Resistors (Choosing the Right Material (The "Crackle" Factor)
- Thin Film / Metal Film (Recommended): These are the gold standard for audio. They have very low noise and high stability. If you are using surface-mount parts, look for "Thin Film" resistors.

Sheet: /ADC_Driver_ADA4940-2ACPZ-R7/
File: ADC_Driver_ADA4940-2ACPZ-R7.kicad_sch

Title:

Size: USLetter	Date:	Rev:
KiCad E.D.A. 8.0.6		Id: 2/6

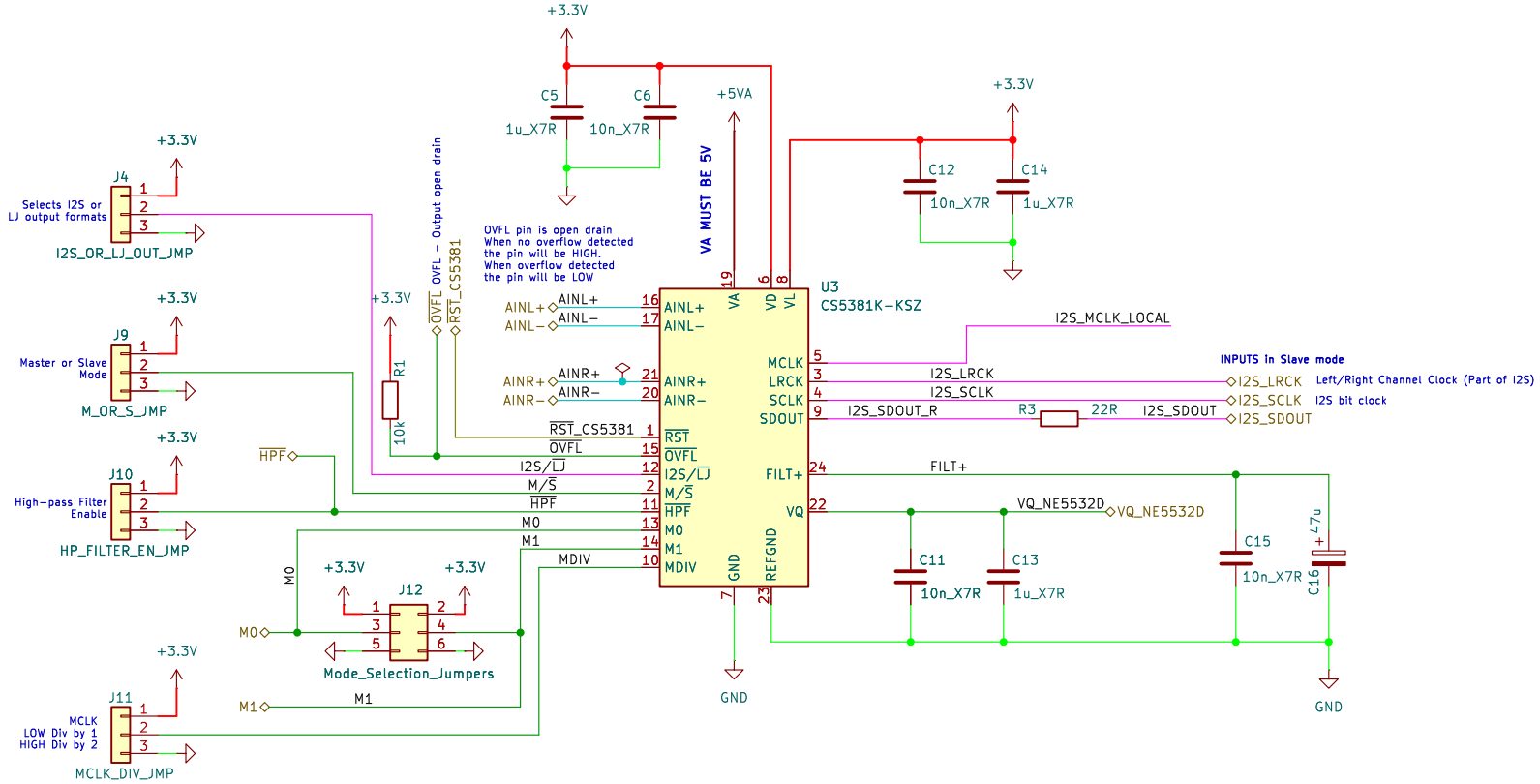

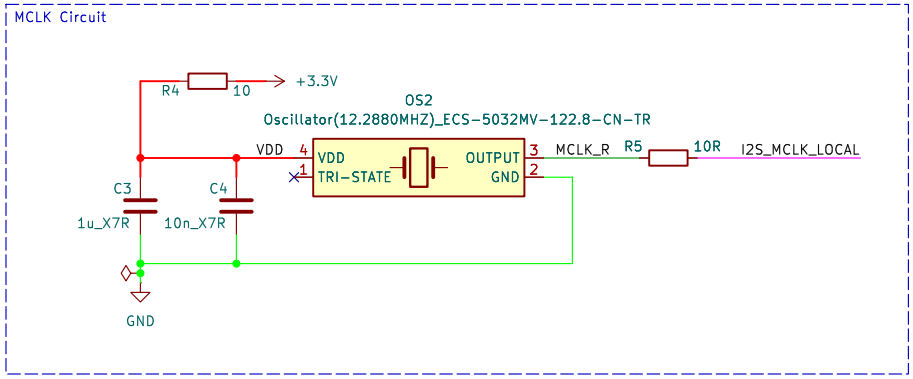

Power-up Notes:
The PG pins from both LDOs are connected to the RST pin.
When LDO voltage out are at the right levels the PG pins go High Impedance. While the level is lower than the desired Vout the PG pins are pulled to GND.

For CS4398 the RST pin should be pulled low at the start of the start up sequence.
If either LDO voltage level is not ready the RST pin will remain LOW.

Sheet: /ADC_CS5381K-KSZ/
File: ADC_CS5381K-KSZ.kicad_sch

Title:

Size: USLetter	Date:	Rev:
KiCad E.D.A. 8.0.6		Id: 3/6

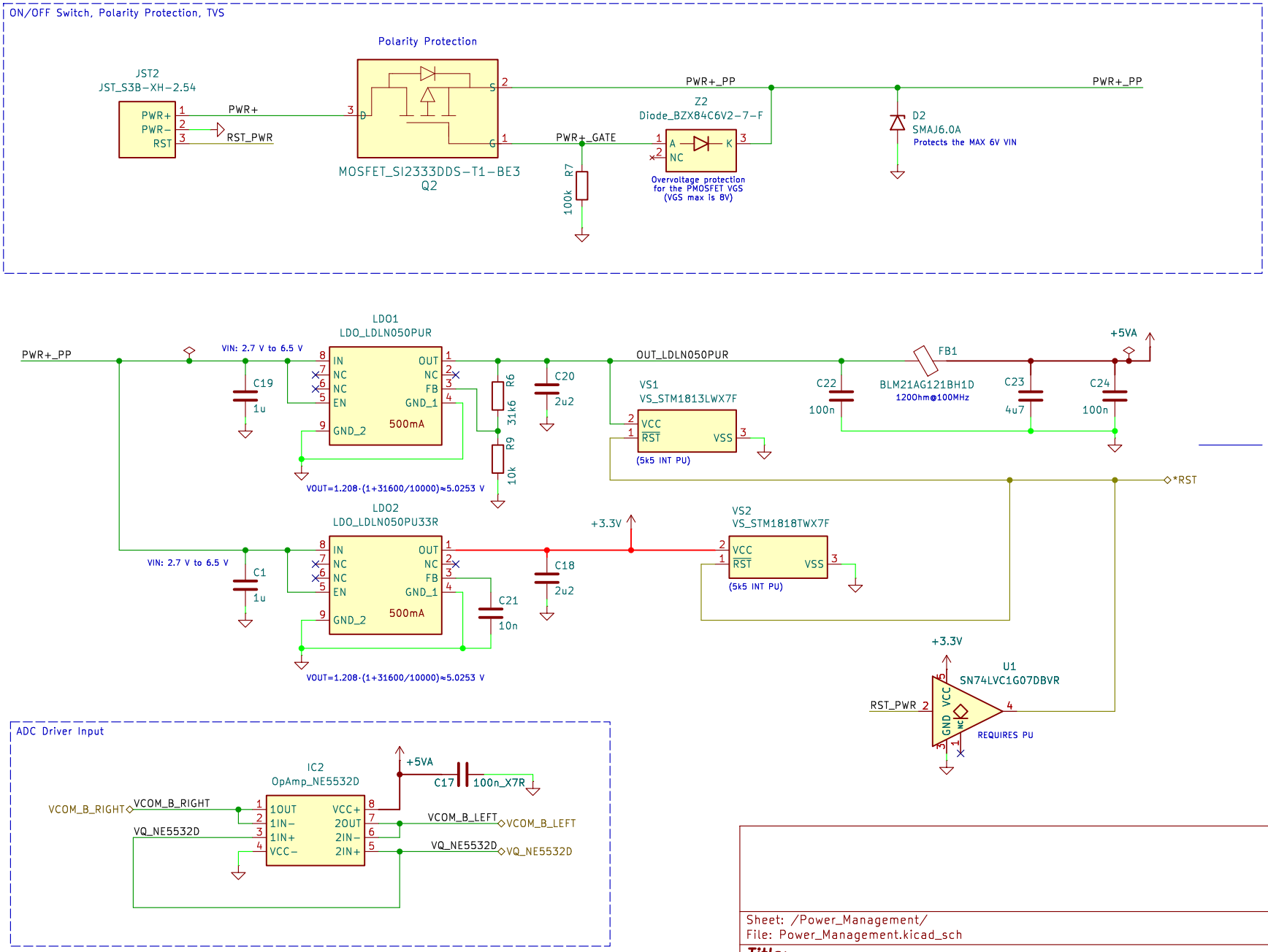

Sheet: /Power_Management/
File: Power_Management.kicad_sch

Title:

Size: USLetter	Date:	Rev:
KiCad E.D.A. 8.0.6		Id: 4/6

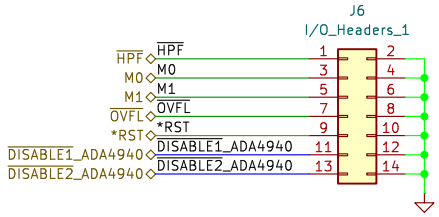

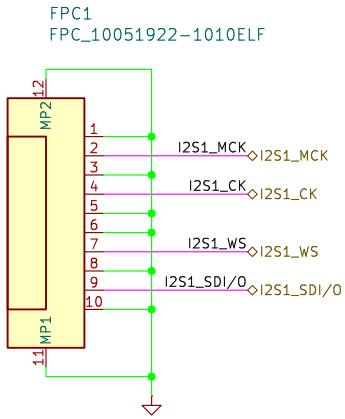

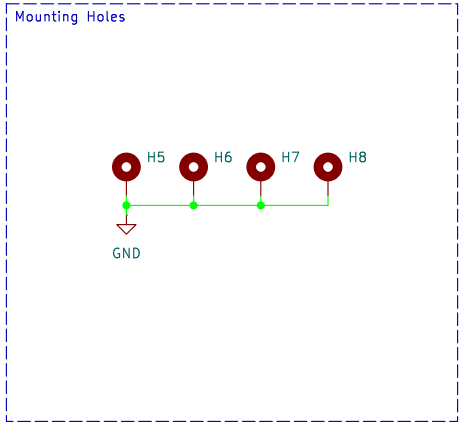

Sheet: /Interfaces/
File: Interfaces.kicad_sch

Title:

Size: USLetter	Date:	Rev:
KiCad E.D.A. 8.0.6		Id: 5/6

Notes:
- Physical power inputs: 3V3, 5V
- Power Consumption
  CS5381K-KSZ
  - IA = 50mA, ID = 50mA, ID = 30mA (MAX), ITOTAL = 130mA
  ADC_Driver_ADA4940-2ACPZ-R7
  - I = 2.5mA
  Microphones
  - I = 1mA

  Device Total 150mA

- All power inputs include polarity protection
- Will be using 12.288 MHz to cover all possible conversion rates of CS5381
- VA Analog MIN is 4.25V to 5.25V (Should be 5V)
- VD Digital MIN is 3.1V to 5.25V
- VL Logic MIN is 237V to 5.25V
- VD pin powers the chip's digital core logic - the internal digital processing circuitry that handles things like:
  (Delta-sigma modulator output, Digital filters (decimation, etc.), Sample rate control logic, Configuration control logic (I^2C/SPI core))
- VL (Logic 1 = VL) controls MCLK, SCLK, LRCK
- Power from USB: pins D+/D- left optionally floating or shorted

Fullscale Input Level = (Ain+)-(Ain-) = 5.64 Vpp
Ain+ is between 3.91 and 1.09 V (Each leg swinging 2.82V)
Ain- is between 3.91 and 1.09 V
Both oscillate around 2.5V (Common mode level)
The DC bias (Common mode level) is sett using VQ or VCOM (one pin)
VQ or VCOM nominal voltage is 2.5V
Filt+ Nominal Voltage 5V (Positive voltage reference output)

- To reach 2.82 Vpp differential at the ADC:
Required gain
G≈2.82/2.26≈1.25 per leg (use two identical amps).
Differential Vpp scales by the same per-leg gain if both paths are equal.
If your target were 2.82 Vpp per input (single-ended):
G≈2.82/1.13≈2.5 per leg.

Impedance Matching between Microphone and ADA4940
- Output Impedance to ICS-40730 is 430 Ohms
- Input Differential Impedance to ADA4940-2 is Rin = 2 x 200 Ohms = 400 Ohms
- The input impedance (dif) of ADA4940 should be 10x of souurce impedance
  - 10x 430 = 4k3 Ohms therefore make each Rg=2k

Design Factors
1. Power Supply
   - 5V (Exact) through a connector
   - 5V Through USB connector
   - LDO to create 3V3 for digital domain
2. Noise in the power supply (especially for CS5381 ADC)
   - Ferrite beads and capacitors
   - Maybe low noise LDO for the 3V3
3. ON/OFF Switch
   - On the 5V power input
4. ADA4940 to drive the CS5381 ADC
   - Amplify output from microphone ICS-40730 by G2.5 for CS5381 full range
5. Longer traces from microphone ICS-40730 to ADA4940 (about 5cm)
   - Impedance matching not needed
   - Length match
6. ADA4940 close to CS5381
   - Impeddance matching not needed
7. Power input polarity protection
   - Using diode and mosfet
8. RST Trigger (Low power mode when LOW)
   - Local RST button
   - External pin headder input
9. ADA4940 DISABLE PINS
   - Active LOW
   - The DISABLE pin features an internal pull-up network that enables the amplifier for normal operation
   - DISABLE pin can be left floating (that is, no external connection is required) and does not require an external pull-up resistor to ensure normal on operation
10. CS5381 ADC sampling at maximum 216kHz
    - MCLK is 216,000×24×2=10.368 MHz
    - Will transmit data through FPC ribbon cable

Fullscale Input Level = (Ain+)-(Ain-) = 5.64 Vpp
Ain+ is between 3.91 and 1.09 V (Each leg swinging 2.82V)
Ain- is between 3.91 and 1.09 V
Both oscillate around 2.5V (Common mode level)
The DC bias (Common mode level) is sett using VQ or VCOM (one pin)
VQ or VCOM nominal voltage is 2.5V
Filt+ Nominal Voltage 5V (Positive voltage reference output)