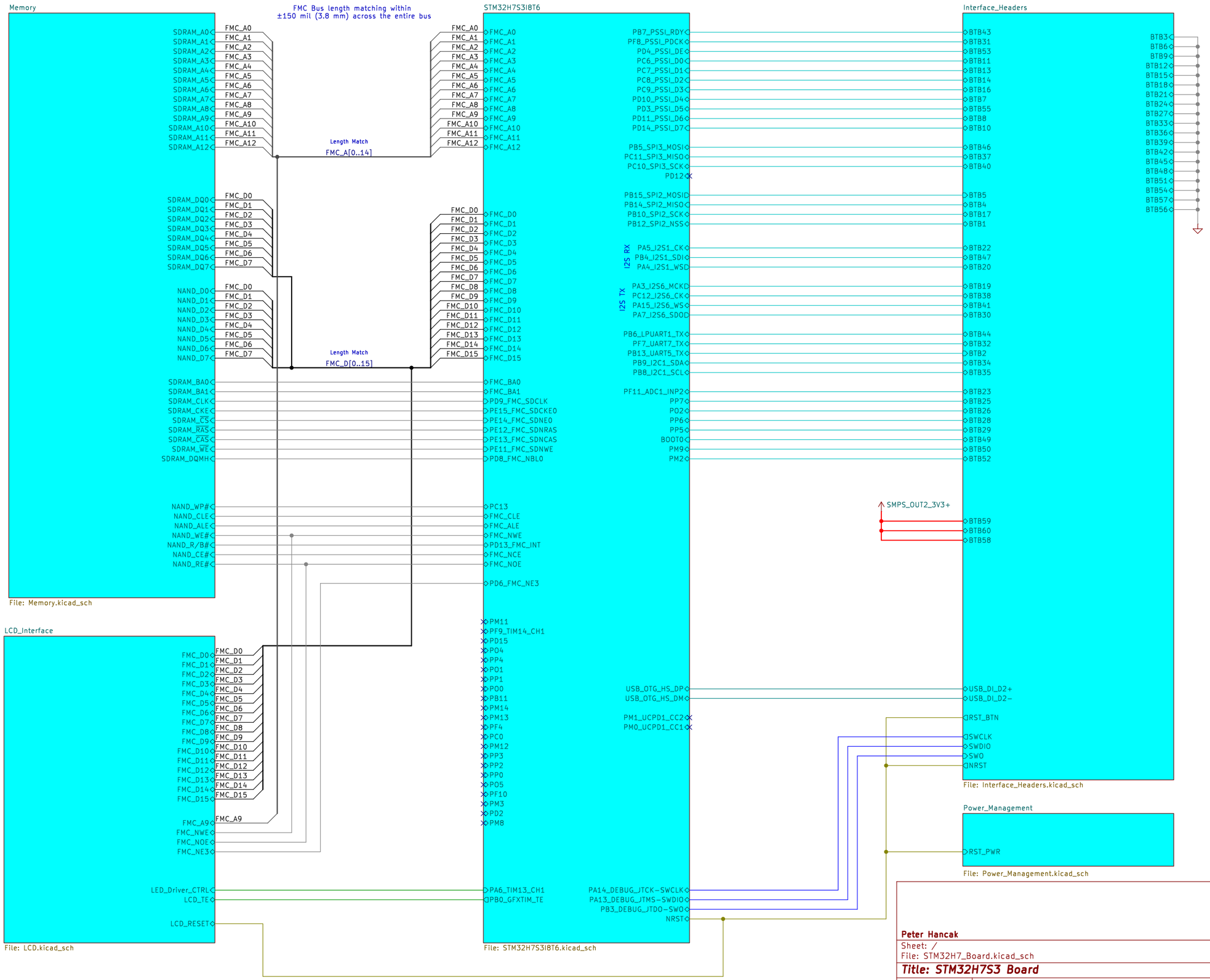

Peter Hancak

Sheet: /

File: STM32H7_Board.kicad_sch

Title: STM32H7S3 Board

Size: A3	Date: 2026-03-17	Rev: B
KiCad E.D.A. 8.0.6		Id: 1/6

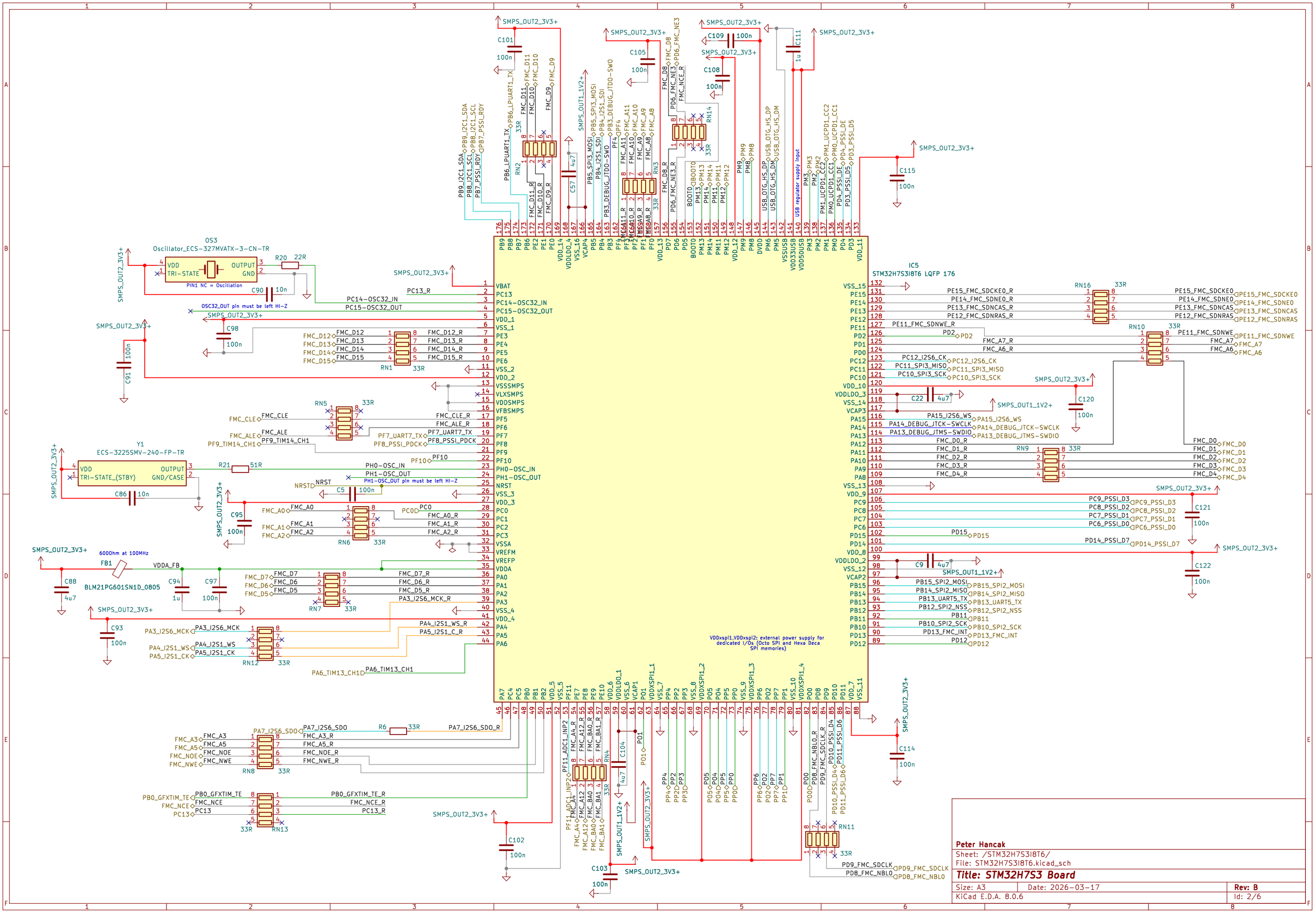
IC5
STM32H7S318T6 LQFP 176
OS3
Oscillator_ECS-327MVATX-3-CN-TR
PIN1 NC = Oscillation
OSC32_OUT pin must be left HI-Z
Y1
ECS-3225SMV-240-FP-TR
PH1-OSC_OUT pin must be left HI-Z
FB1
600Ohm at 100MHz
BLM21PG601SN1D_0805
VDDxspi1,VDDxspi2: external power supply for dedicated I/Os (Octo SPI and Hexa Deca SPI memories)
USB regulator supply input
SMPS_OUT2_3V3+
SMPS_OUT1_1V2+
Peter Hancak
Sheet: /STM32H7S318T6/
File: STM32H7S318T6.kicad_sch
Title: STM32H7S3 Board
Size: A3
Date: 2026-03-17
Rev: B
KiCad E.D.A. 8.0.6
Id: 2/6

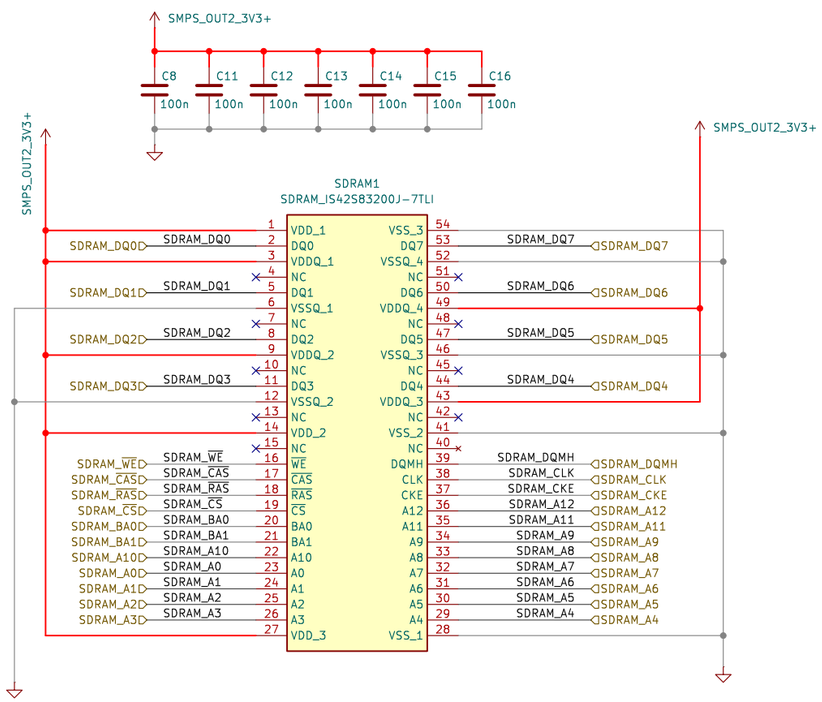

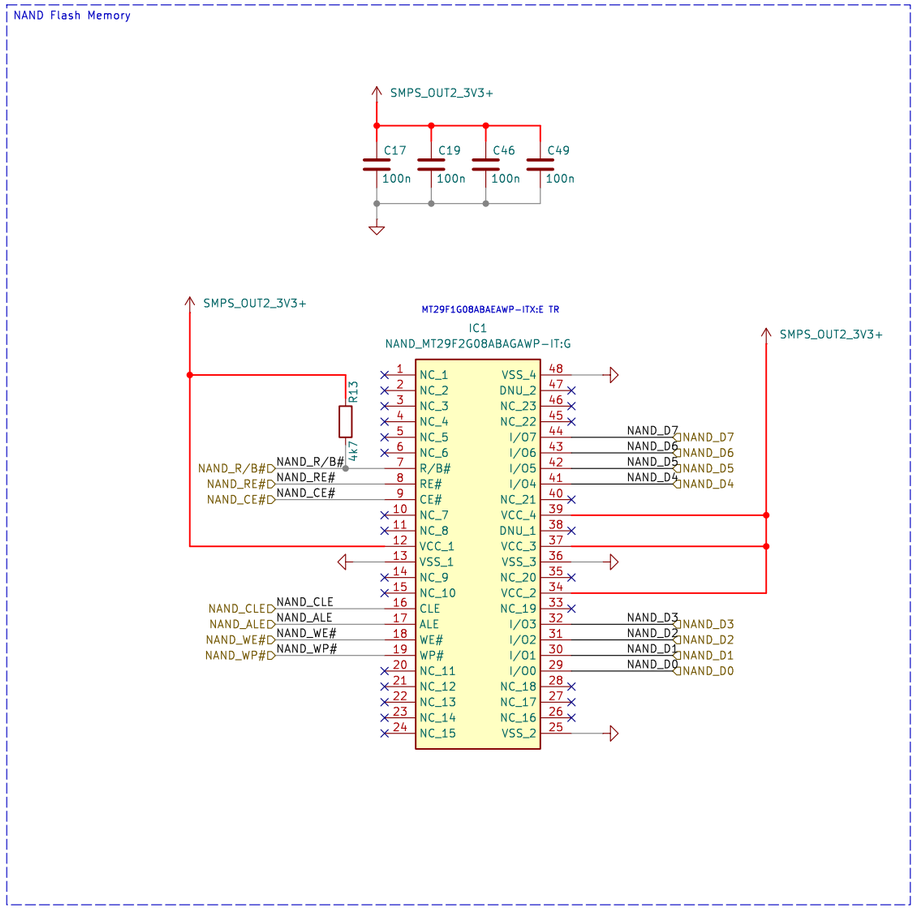

Peter Hancak	
Sheet: /Memory/ File: Memory.kicad_sch	
Title: STM32H7S3 Board	
Size: A3 Date: 2026-03-17	Rev: B
KiCad E.D.A. 8.0.6	Id: 3/6

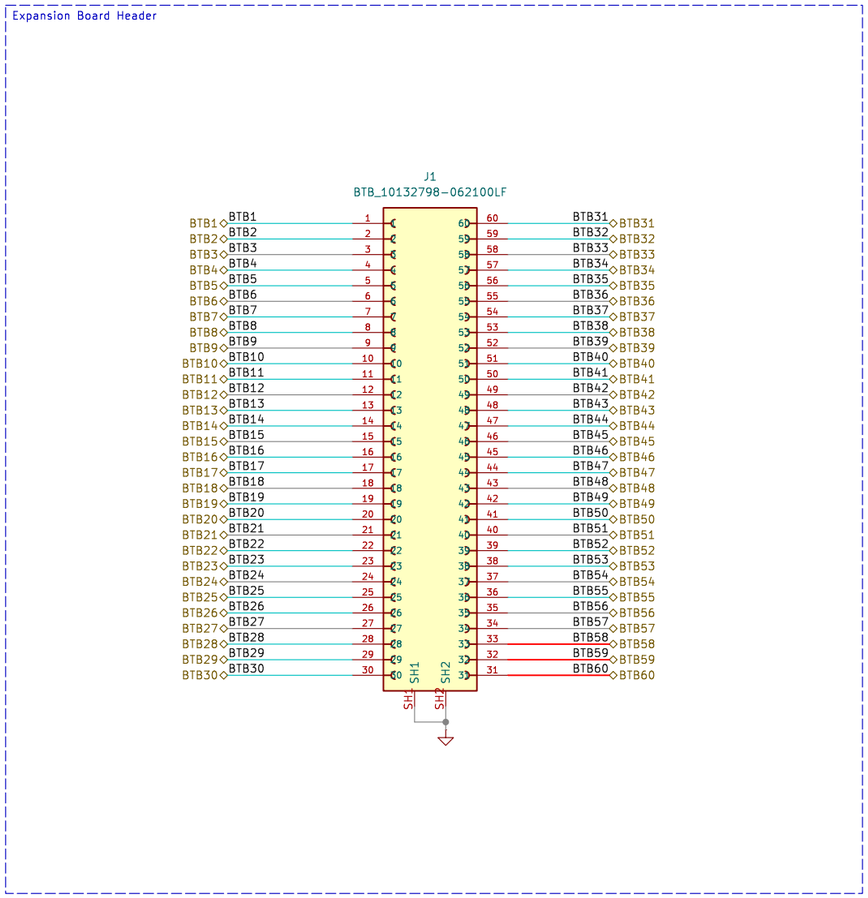

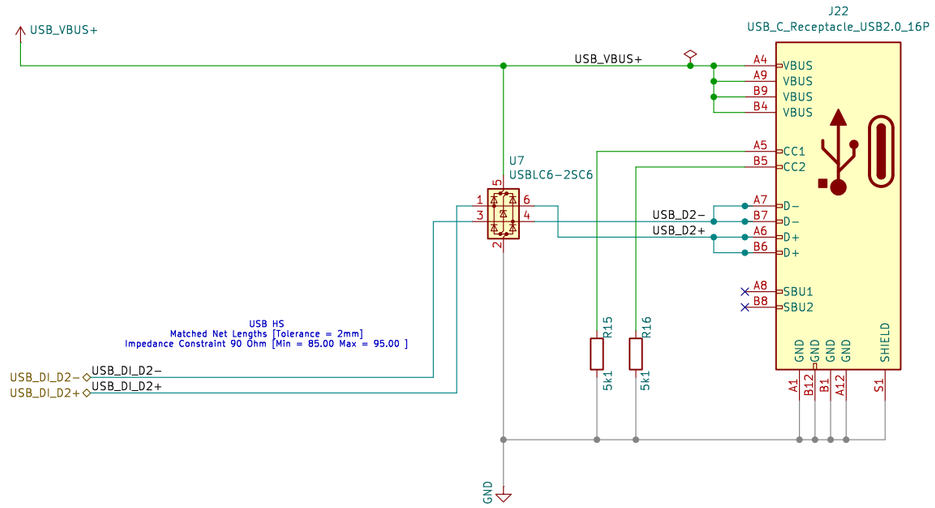

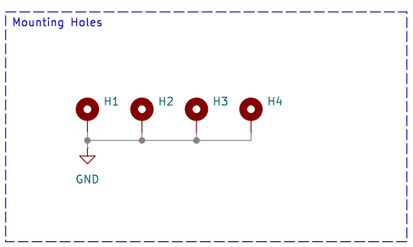

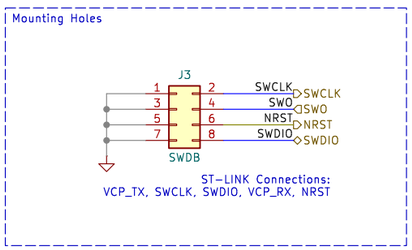

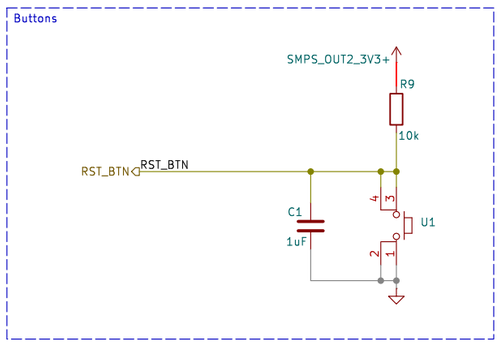

Peter Hancak

Sheet: /Interface_Headers/

File: Interface_Headers.kicad_sch

Title: STM32H7S3 Board

Size: A3	Date: 2026-03-17	Rev: B
KiCad E.D.A. 8.0.6		Id: 5/6

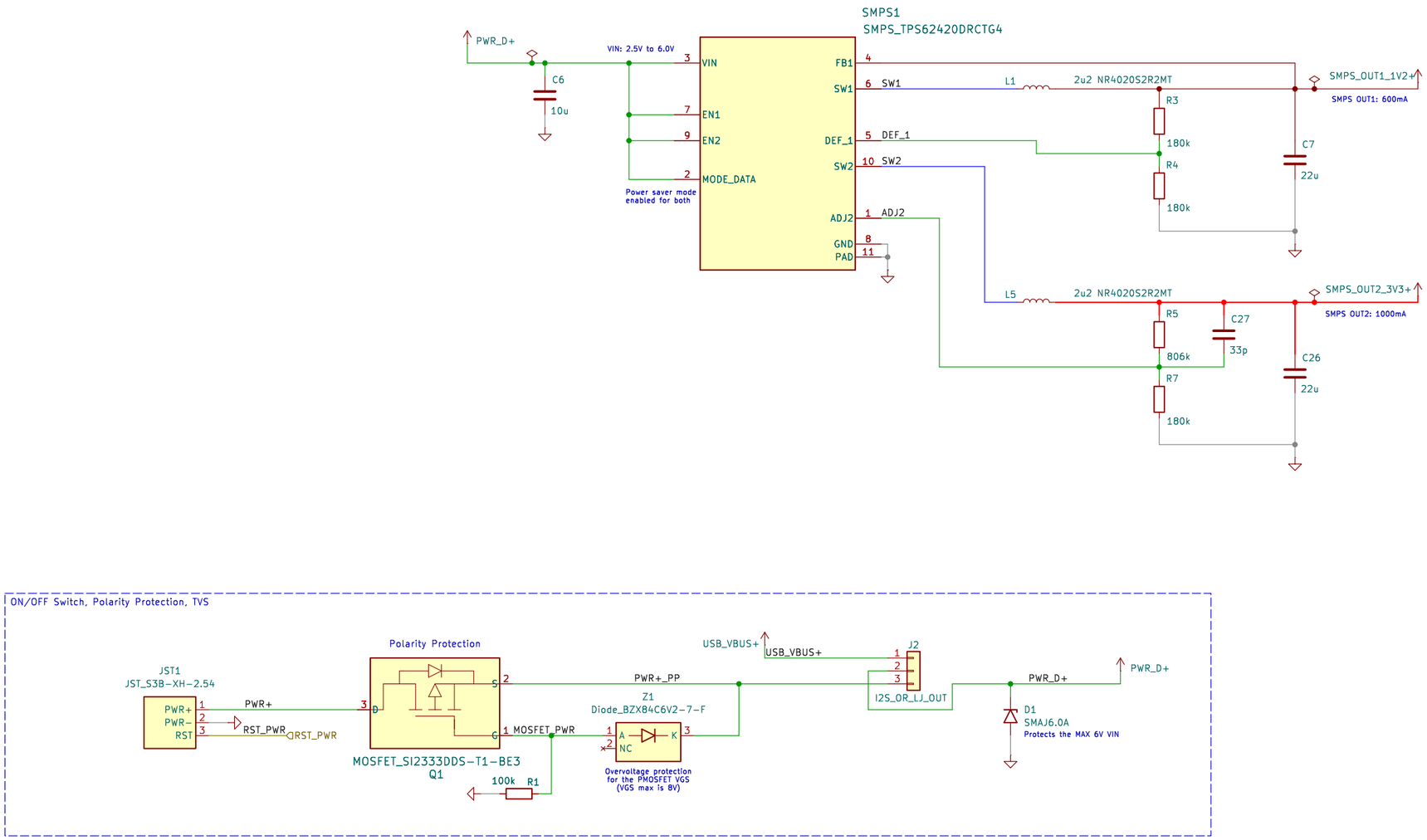

Peter Hancak

Sheet: /Power_Management/
File: Power_Management.kicad_sch

Title: STM32H7S3 Board

Size: A3	Date: 2026-03-17	Rev: B
KiCad E.D.A. 8.0.6		Id: 6/6

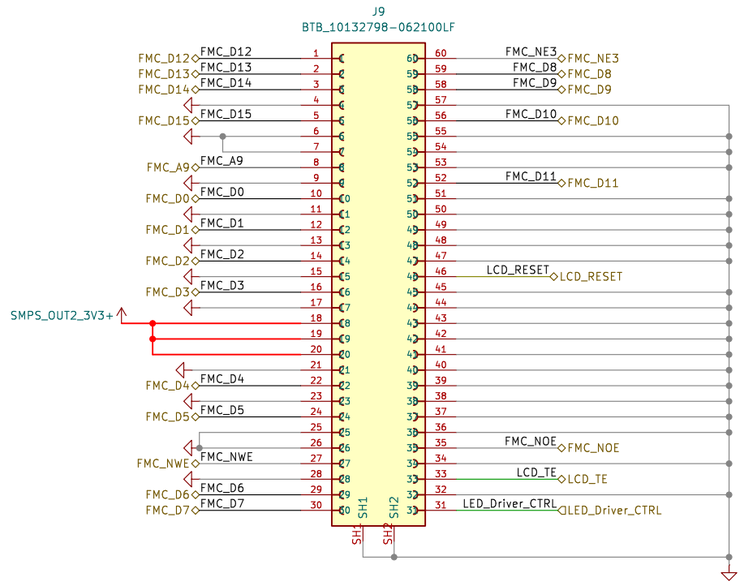

Peter Hancak

Sheet: /LCD_Interface/
File: LCD.kicad_sch

Title: STM32H7S3 Board

Size: A3	Date: 2026-03-17	Rev: B
KiCad E.D.A. 8.0.6		Id: 7/6