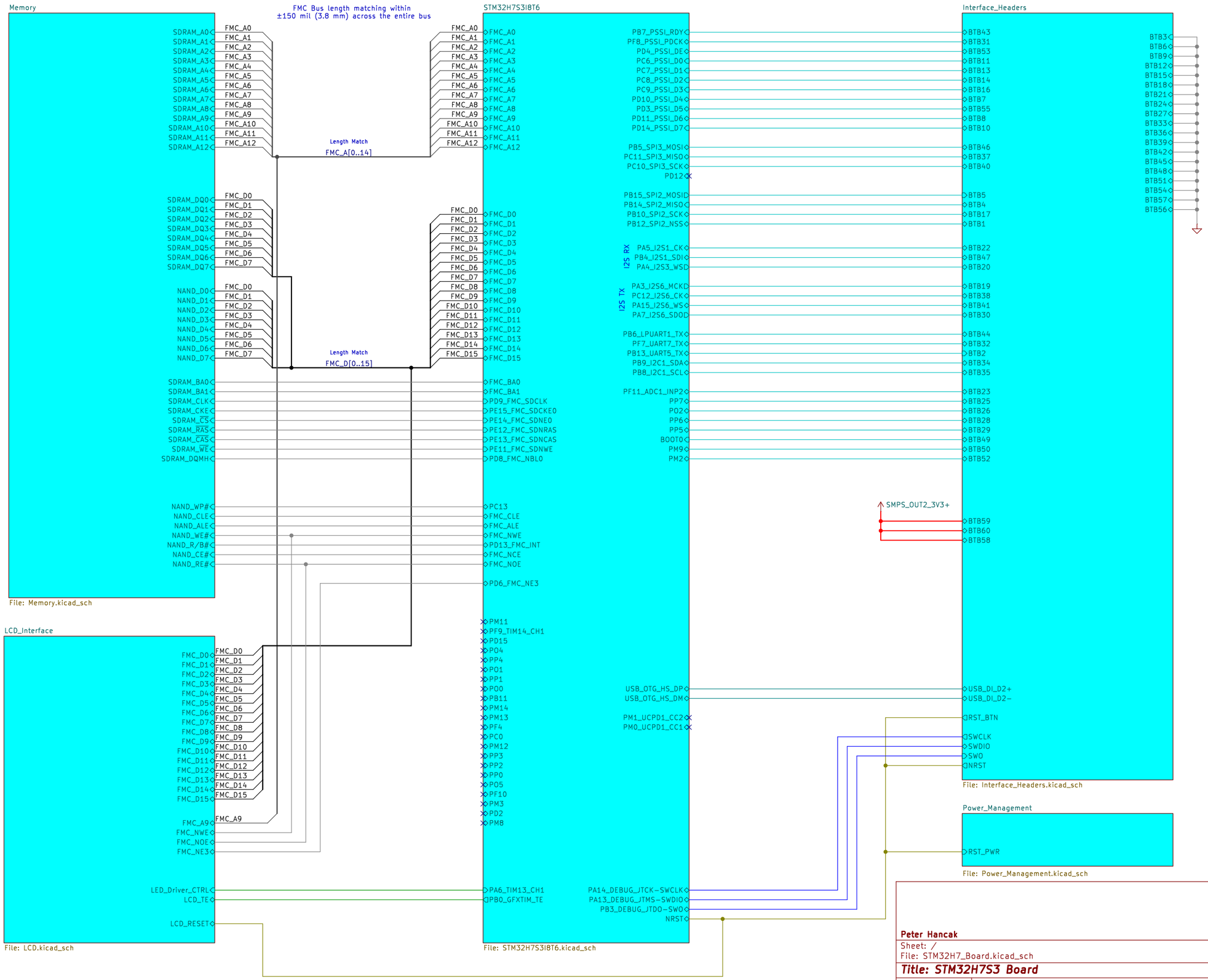

Peter Hancak

Sheet: /

File: STM32H7_Board.kicad_sch

Title: STM32H7S3 Board

Size: A3	Date: 2026-03-11	Rev: B
KiCad E.D.A. 8.0.6		Id: 1/6

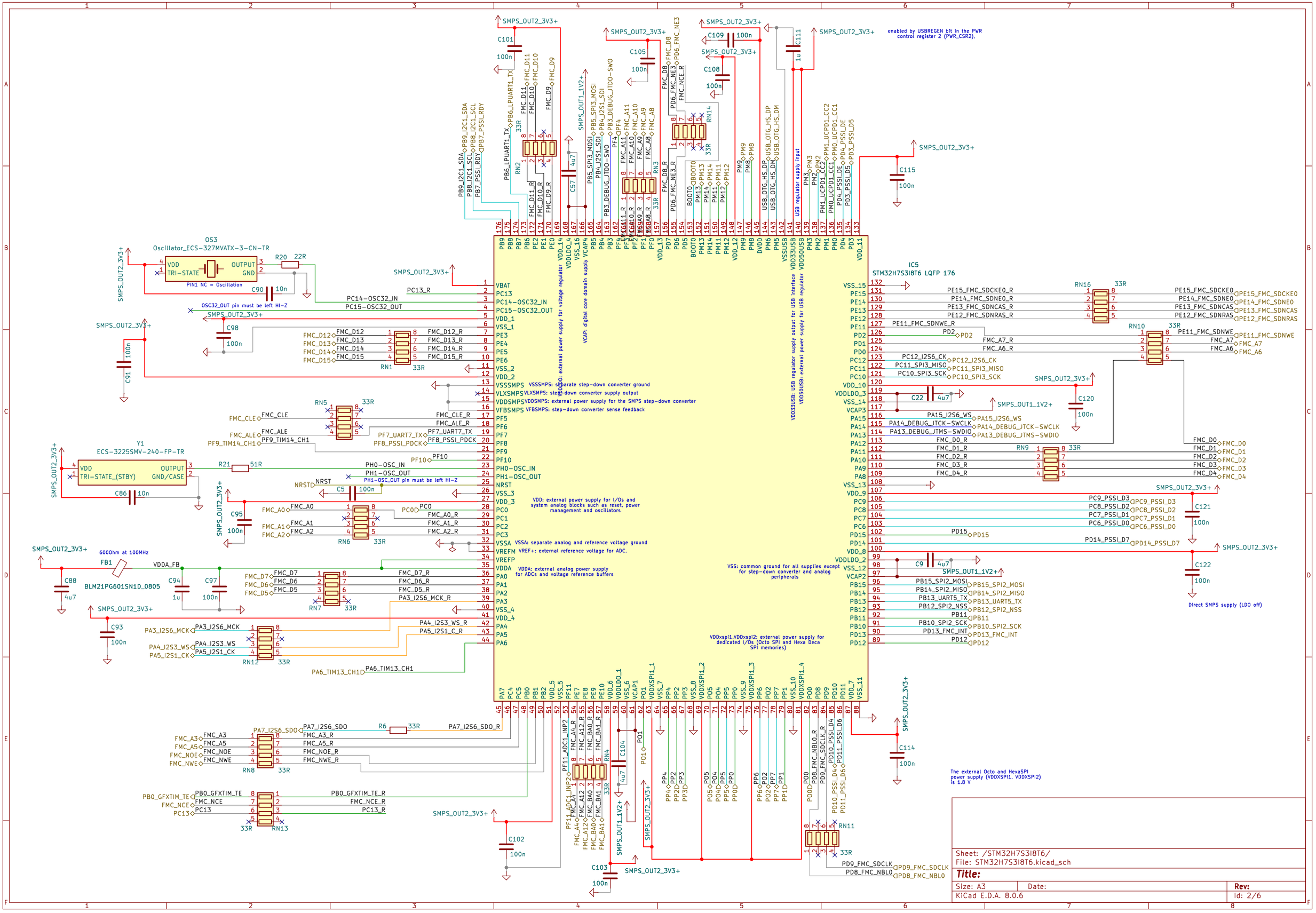
IC5
STM32H7S3I8T6 LQFP 176
OS3
Oscillator_ECS-327MVATX-3-CN-TR
PIN1 NC = Oscillation
Y1
ECS-3225SMV-240-FP-TR
OSC32_OUT pin must be left HI-Z
PH1-OSC_OUT pin must be left HI-Z
enabled by USBREGEN bit in the PWR control register 2 (PWR_CSR2).
VSSSMPS: separate step-down converter ground
VLXSMPS: step-down converter supply output
VDDSMPS: external power supply for the SMPS step-down converter
VFBSMPS: step-down converter sense feedback
VDD: external power supply for I/Os and system analog blocks such as reset, power management and oscillators
VSSA: separate analog and reference voltage ground
VREF+: external reference voltage for ADC.
VDDA: external analog power supply for ADCs and voltage reference buffers
VSS: common ground for all supplies except for step-down converter and analog peripherals
VDDxspi1,VDDxspi2: external power supply for dedicated I/Os (Octo SPI and Hexa Deca SPI memories)
VDD: external power supply for voltage regulator
VCAP: digital core domain supply
VDD33USB: USB regulator supply output for USB interface
VDD50USB: external power supply for USB regulator
USB regulator supply input
Direct SMPS supply (LDO off)
The external Octo and HexaSPI power supply (VDDXSPI1, VDDXSPI2) is 1.8 V
Sheet: /STM32H7S3I8T6/
File: STM32H7S3I8T6.kicad_sch
Title:
Size: A3
Date:
Rev:
KiCad E.D.A. 8.0.6
Id: 2/6

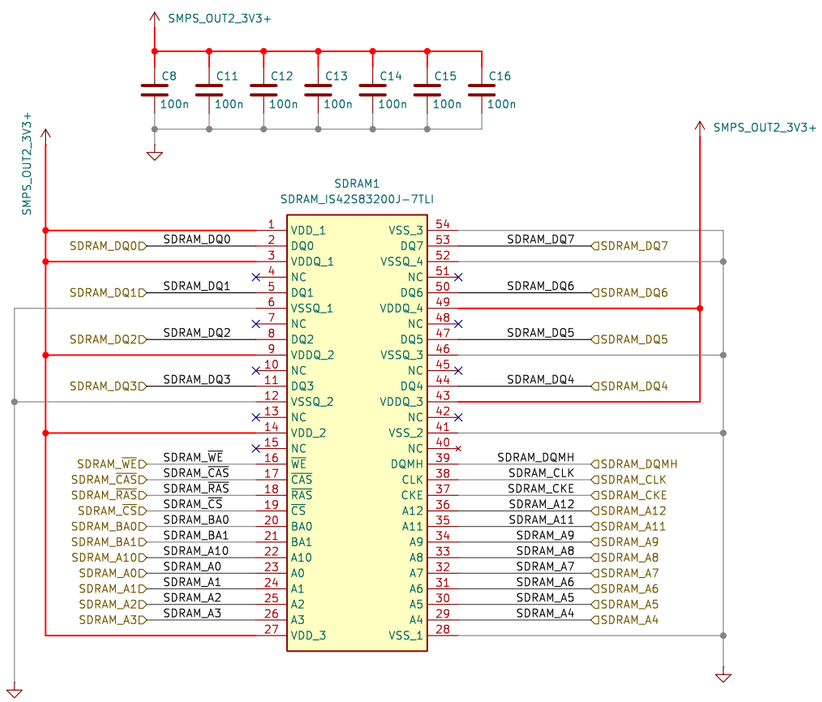

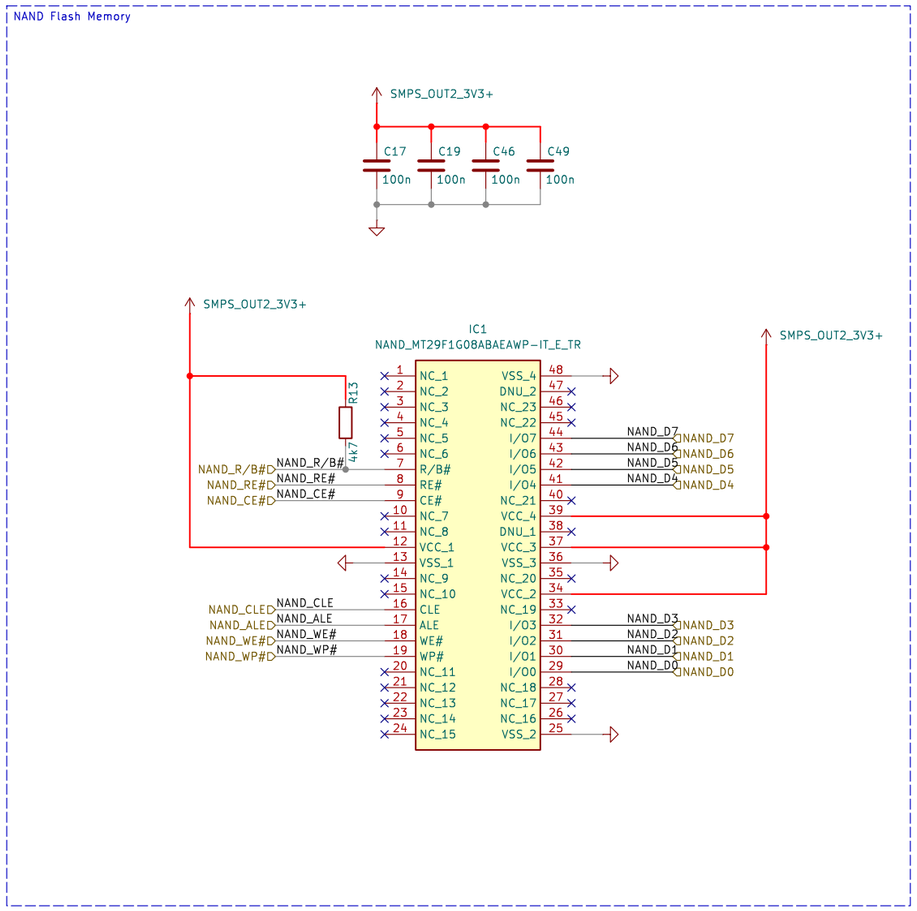

Sheet: /Memory/
File: Memory.kicad_sch

Title:

Size: A3	Date:	Rev:
KiCad E.D.A. 8.0.6		Id: 3/6

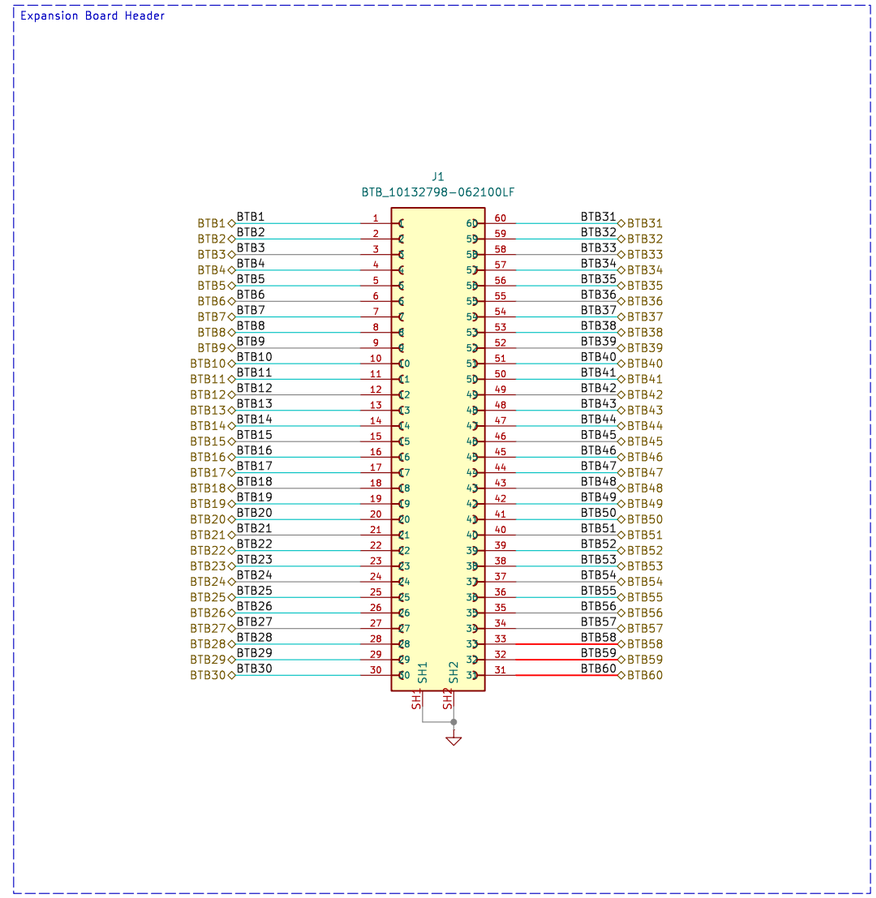

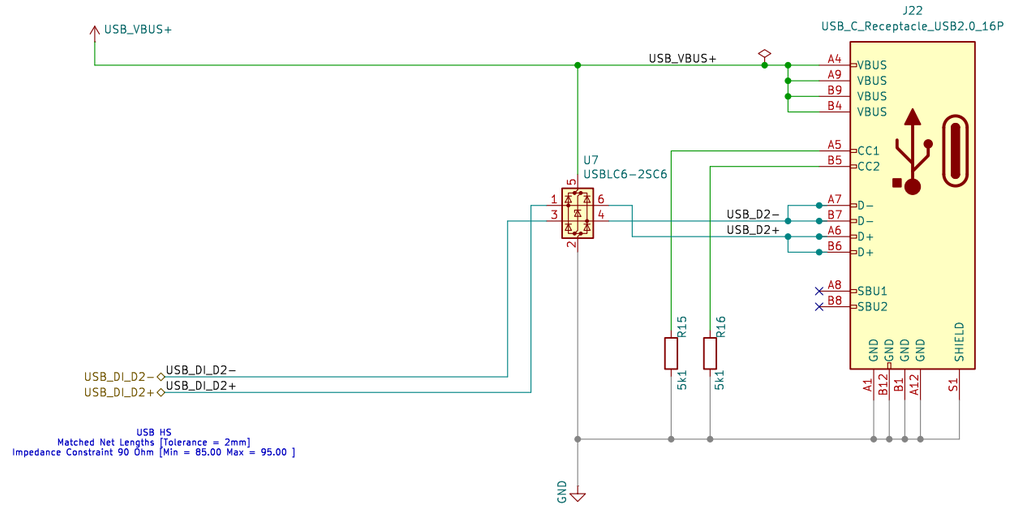

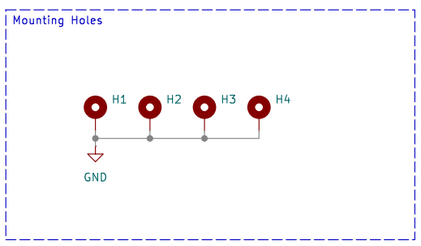

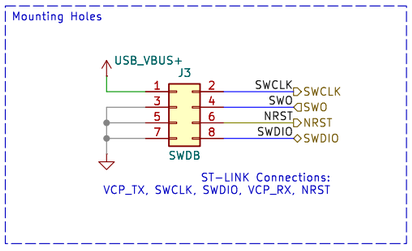

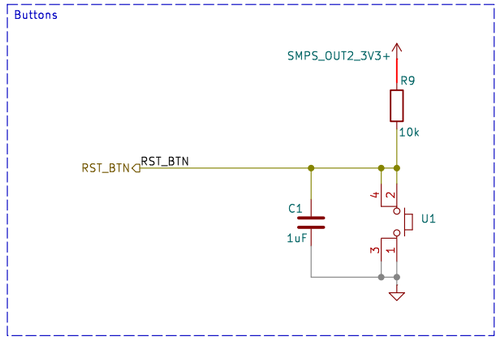

Sheet: /Interface_Headers/
File: Interface_Headers.kicad_sch

Title:

Size: A3	Date:	Rev:
KiCad E.D.A. 8.0.6		Id: 5/6

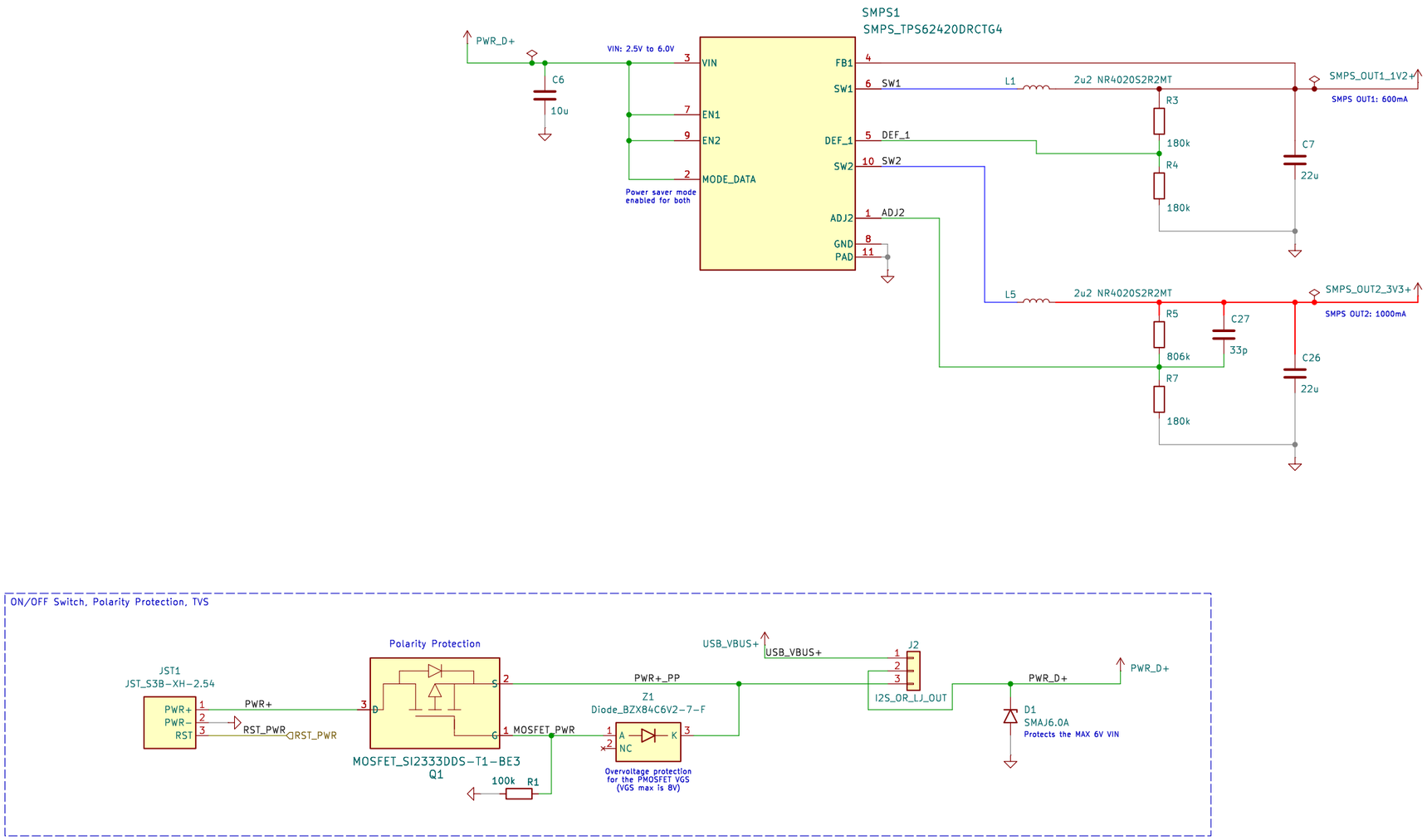

Sheet: /Power_Management/
File: Power_Management.kicad_sch

Title:

Size: A3	Date:	Rev:
KiCad E.D.A. 8.0.6		Id: 6/6

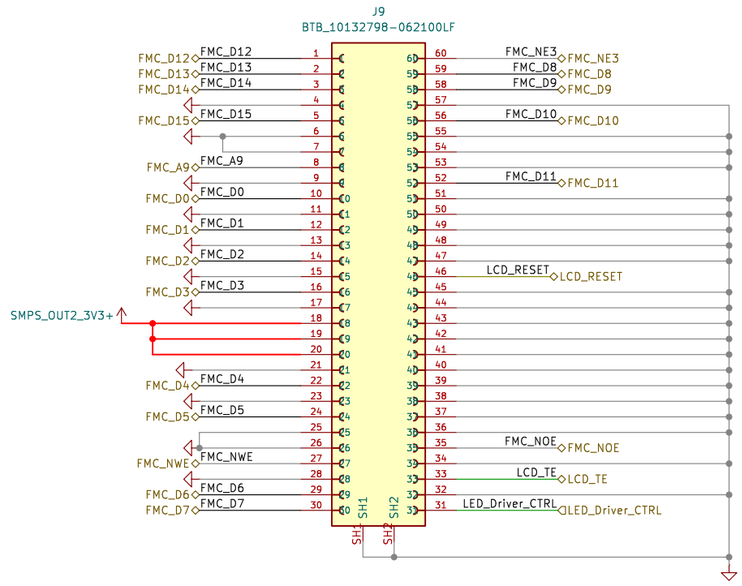

Sheet: /LCD_Interface/
File: LCD.kicad_sch

Title:

Size: A3	Date:	Rev:
KiCad E.D.A. 8.0.6		Id: 7/6