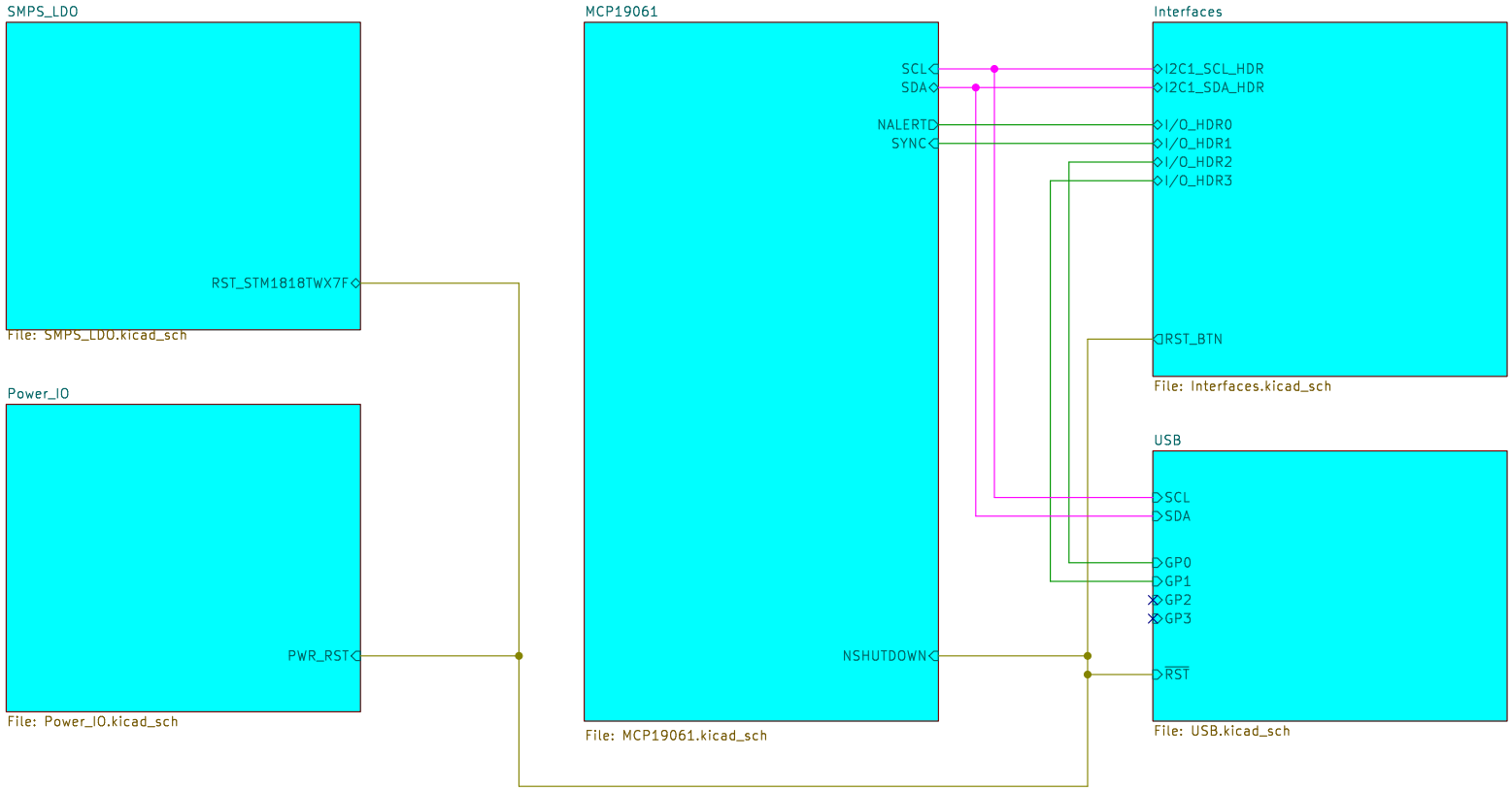

Peter Hancak

Sheet: /
File: USBPD_Board.kicad_sch

Title: USB-PD Board

Size: USLetter	Date: 2025-12-03	**Rev: B**
KiCad E.D.A. 8.0.6		Id: 1/6

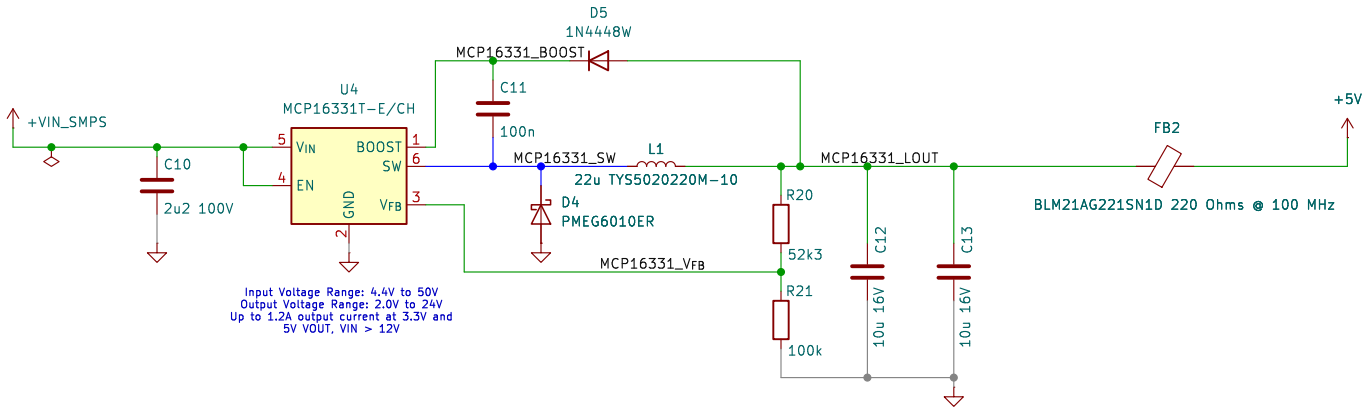

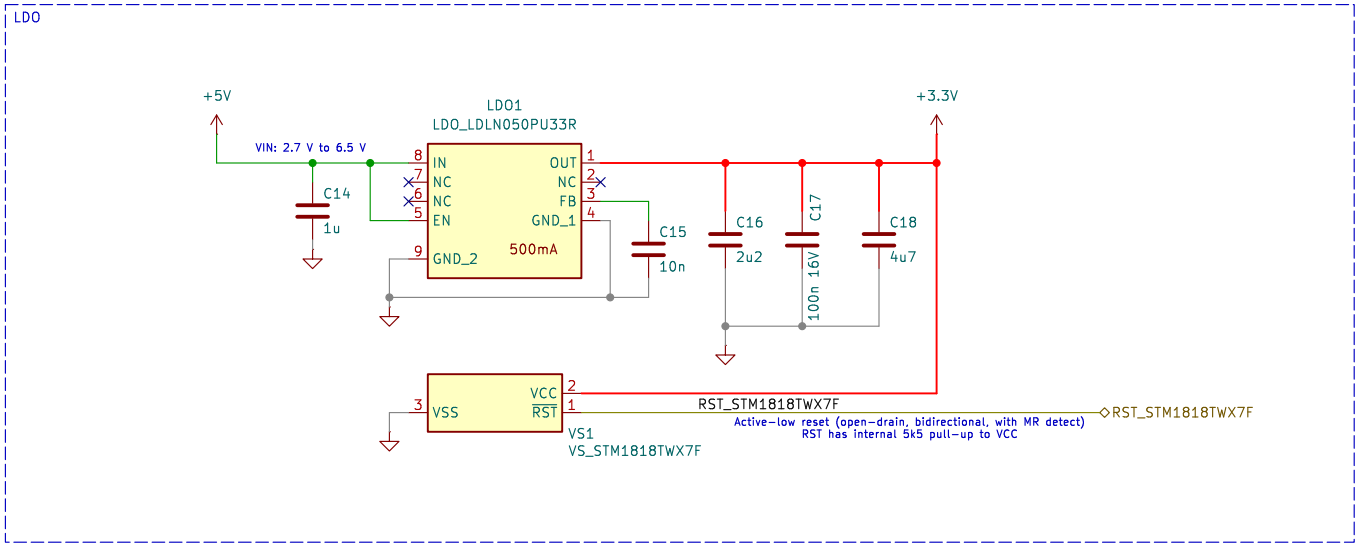

RESET
- The RAA489118
- MCP22301T-2I/KYX
  - ATSAMD20E RESET pin itself has an internal pull-up resistor, hence it is optional to add any external pull-up resistor.
  - MCP22350 Has inner pull-up
- STM32L100C6U6A The NRST pin input driver uses CMOS technology. It is connected to a permanent pull-up resistor,
- STM1818TWX7F voltage supervisor has own pull up 5k5
- BQ41Z50RSNT to reset power cycle

Peter Hancak

Sheet: /SMPS_LDO/
File: SMPS_LDO.kicad_sch

Title: USB-PD Board

Size: USLetter	Date: 2025-12-03	**Rev: B**
KiCad E.D.A. 8.0.6		Id: 3/6

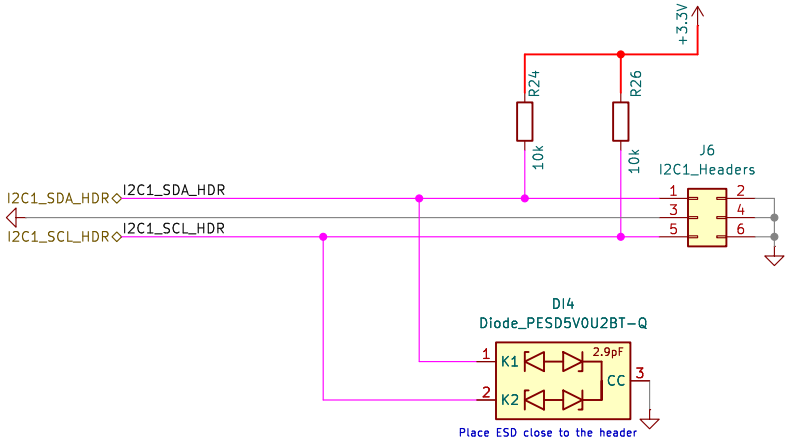

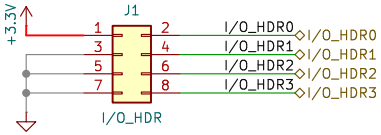

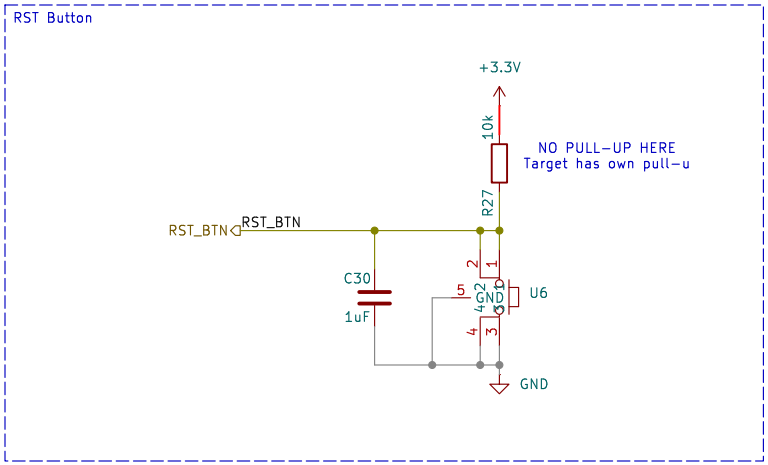

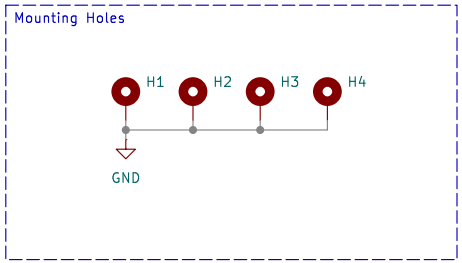

Peter Hancak

Sheet: /Interfaces/
File: Interfaces.kicad_sch

Title: USB-PD Board

Size: USLetter	Date: 2025-12-03	**Rev: B**
KiCad E.D.A. 8.0.6		Id: 4/6

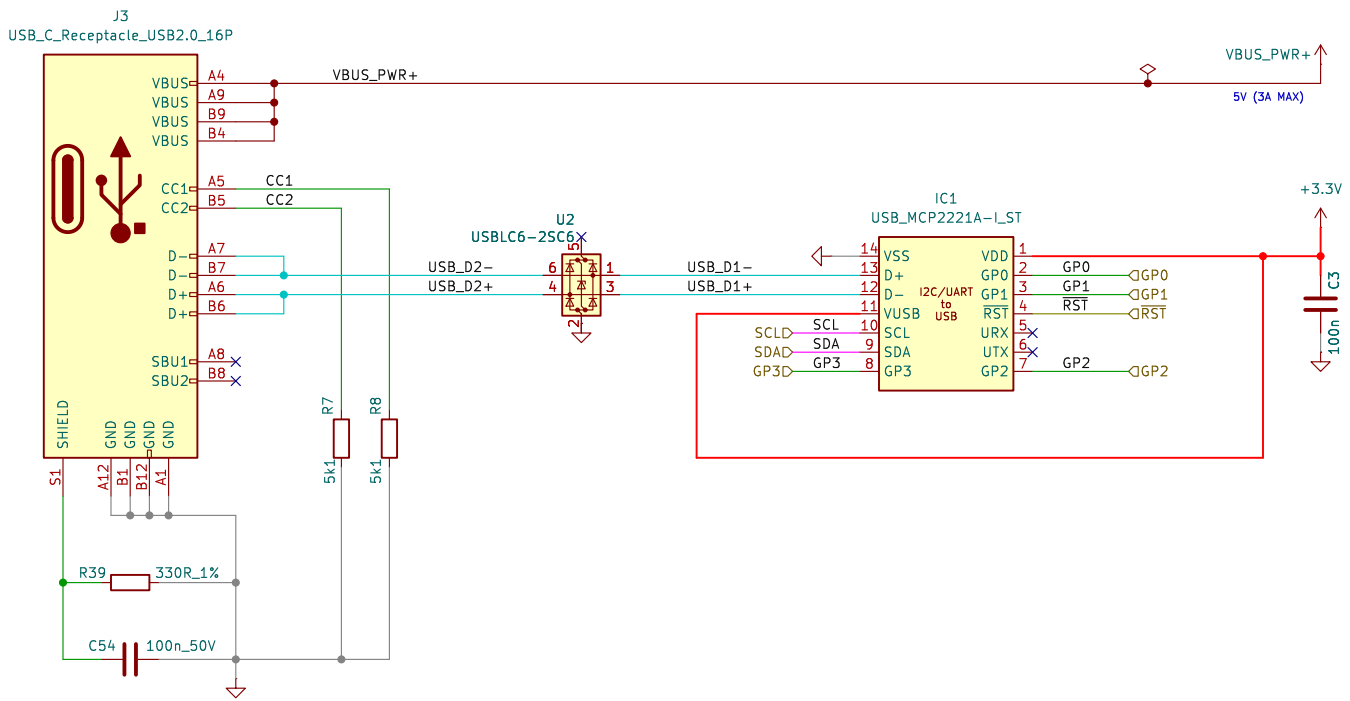

Peter Hancak	
Sheet: /USB/	
File: USB.kicad_sch	
Title: USB−PD Board	
Size: USLetter Date: 2025−12−03	**Rev: B**
KiCad E.D.A. 8.0.6	Id: 6/6

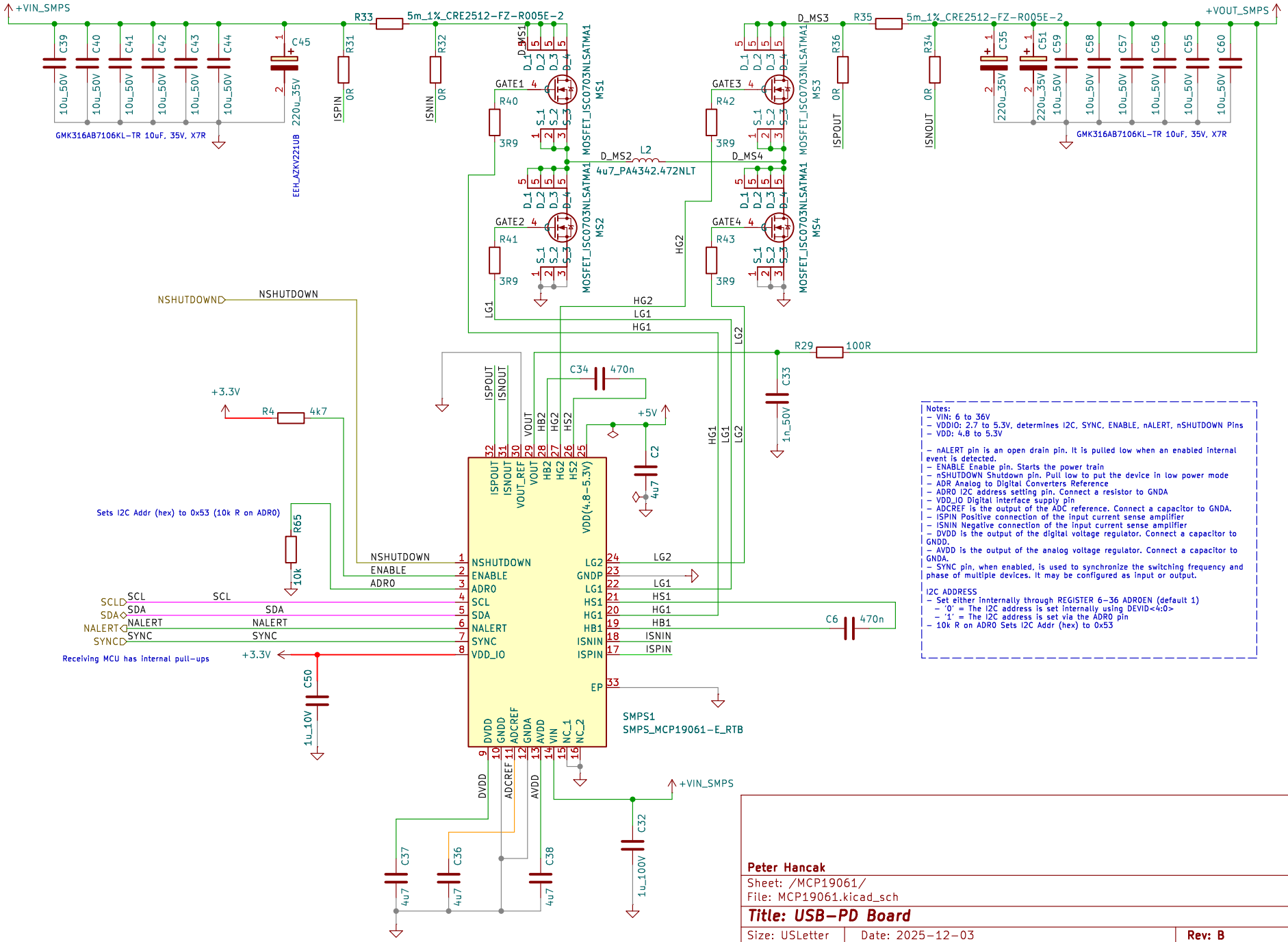

Notes:
- VIN: 6 to 36V
- VDDIO: 2.7 to 5.3V, determines I2C, SYNC, ENABLE, nALERT, nSHUTDOWN Pins
- VDD: 4.8 to 5.3V

- nALERT pin is an open drain pin. It is pulled low when an enabled internal event is detected.
- ENABLE Enable pin. Starts the power train
- nSHUTDOWN Shutdown pin. Pull low to put the device in low power mode
- ADR Analog to Digital Converters Reference
- ADR0 I2C address setting pin. Connect a resistor to GNDA
- VDD_IO Digital interface supply pin
- ADCREF is the output of the ADC reference. Connect a capacitor to GNDA.
- ISPIN Positive connection of the input current sense amplifier
- ISNIN Negative connection of the input current sense amplifier
- DVDD is the output of the digital voltage regulator. Connect a capacitor to GNDD.
- AVDD is the output of the analog voltage regulator. Connect a capacitor to GNDA.
- SYNC pin, when enabled, is used to synchronize the switching frequency and phase of multiple devices. It may be configured as input or output.

I2C ADDRESS
- Set either innternally through REGISTER 6-36 ADROEN (default 1)
  - '0' = The I2C address is set internally using DEVID<4:0>
  - '1' = The I2C address is set via the ADR0 pin
- 10k R on ADR0 Sets I2C Addr (hex) to 0x53

Peter Hancak

Sheet: /MCP19061/
File: MCP19061.kicad_sch

Title: USB-PD Board

Size: USLetter	Date: 2025-12-03	**Rev: B**
KiCad E.D.A. 8.0.6		Id: 7/6

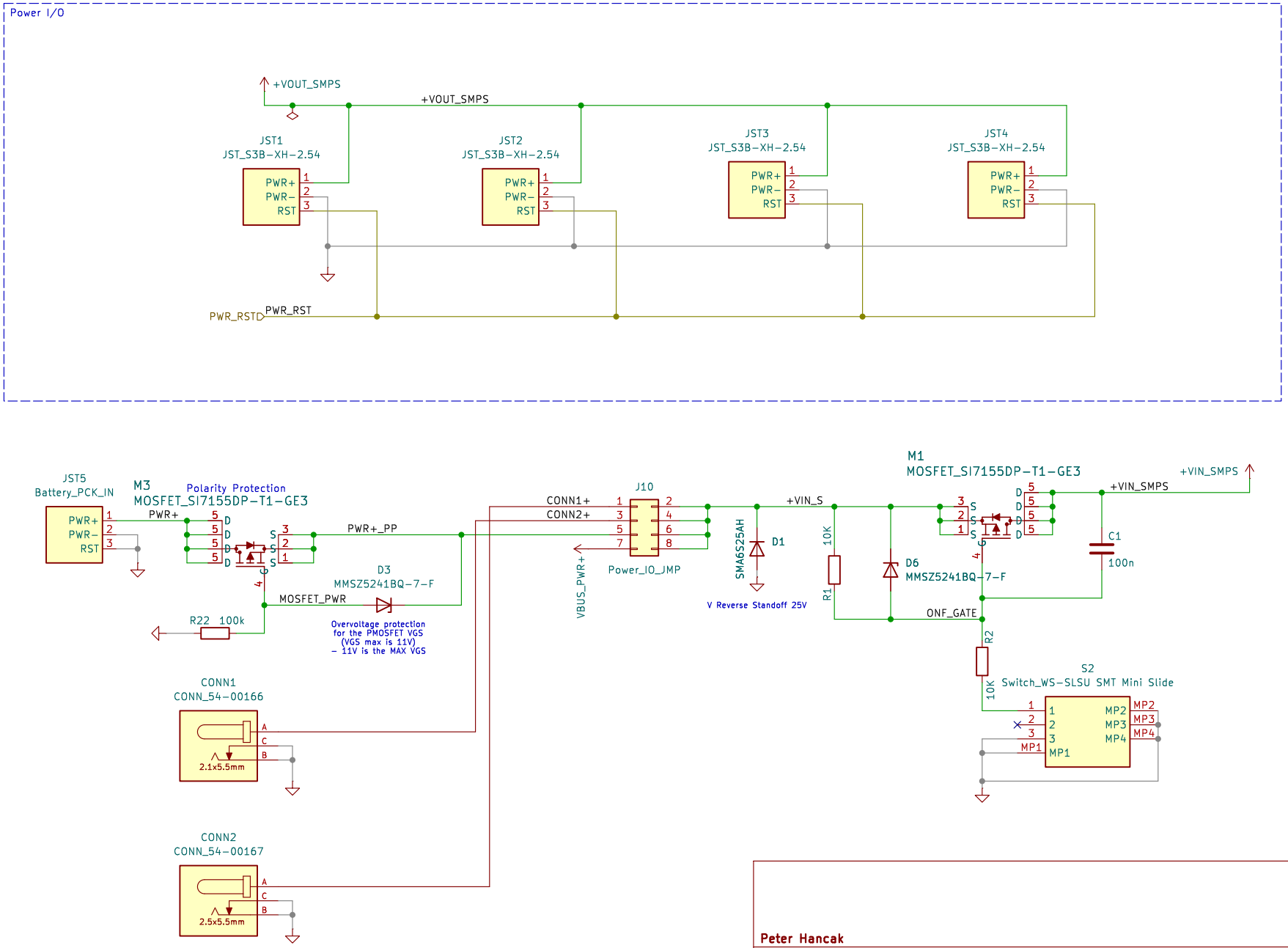

Peter Hancak

Sheet: /Power_IO/

File: Power_IO.kicad_sch

Title: USB-PD Board

Size: USLetter	Date: 2025-12-03	Rev: B
KiCad E.D.A. 8.0.6		Id: 8/6