WARNING:
DO NOT use 'Tools -> Update PCB from Schematic'
Use ONLY 'Tools -> Update Schematic from PCB'
with 'Update: Net Names' checked (it's unchecked by default)

The PCB is the defining authority now.
Update any net names on PCB, and push them to Schematic.

Using 'Tools -> Update PCB from Schematic' will only bring disaster and heartache
by propogating all Schematic mistakes to the PCB, thus erasing all hope of
straightening it out.

After renaming Net Names on PCB and pushing to Schematic, only SOME Labels will be updated.
The Update Schematic from PCB action only updates the label closest to each pin on each component.
All other net names on the schematic trace between component pins remain the old name
(EG Buss labels), so take great care when renaming begins.

BEWARE also of overlapping text searches when using find/replace
For example, replacing UA5_1 will also modify all UA5_16

Entrex Trapezoid Terminal
(AKA: ROCC MKIII Terminal and Nixdorf 06418 Terminal)
Processor Board

- = Data Bus?
- = Keyboard
- = Interface Board
- = Floppy Disk Controller Board (FDC)
- = RAM Bus
- = NC on Backplane

WARNING: Until refined & corrected, Global Label tag arrows may not indicate the proper signal in/out direction.
IN was used as default when KiCad Symbols (components) were not clear on In vs Out signals, so always check component datasheets when in doubt.

Misc. Control Line Bus
Don't know what they control yet
just needed the signalas
over on the other side

1920/480 Jumper Bus

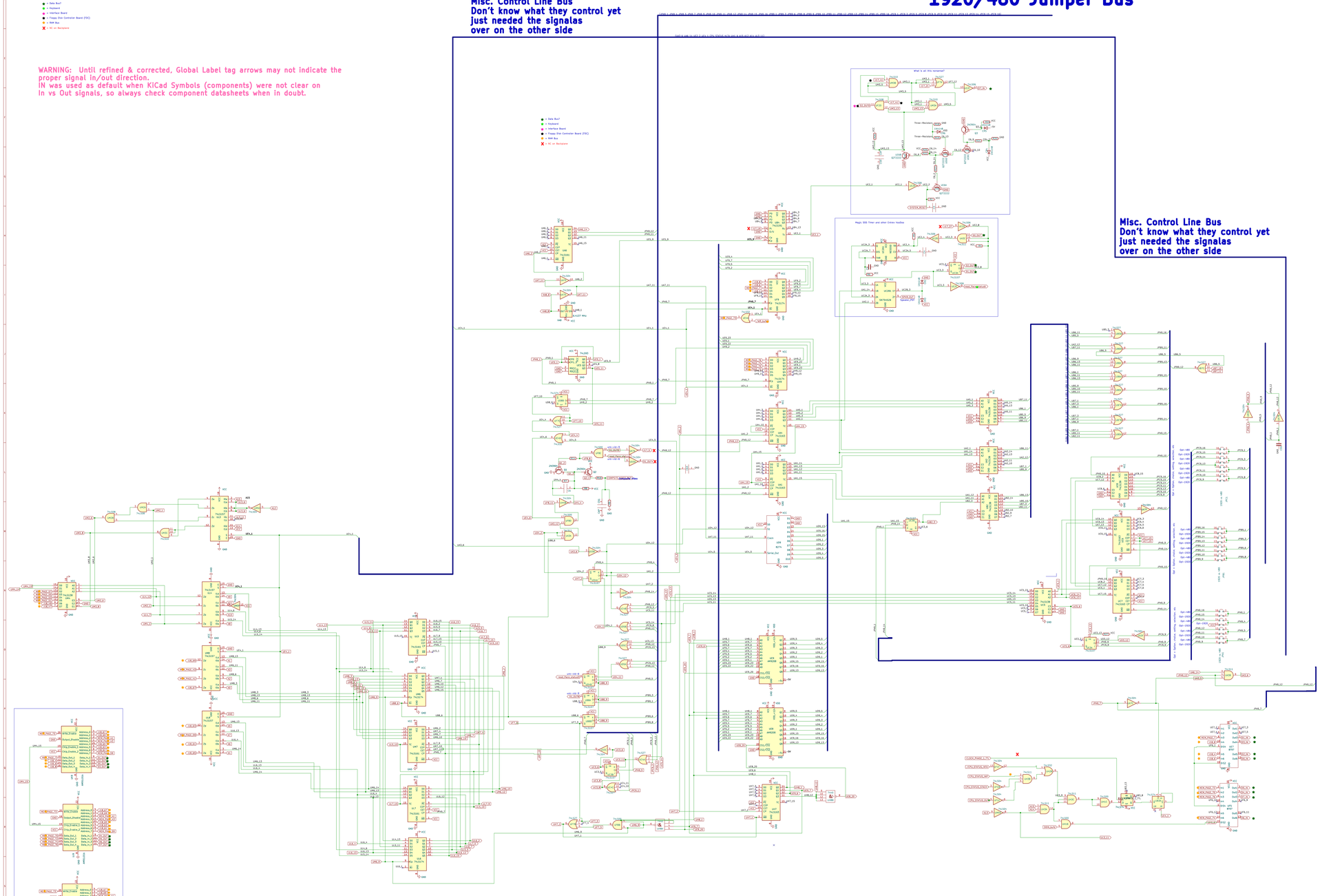

Misc. Control Line Bus
Don't know what they control yet
just needed the signalas
over on the other side

WARNING: Until refined & corrected, Global Label tag arrows may not indicate the proper signal in/out direction.
IN was used as default when KiCad Symbols (components) were not clear on In vs Out signals, so always check component datasheets when in doubt.

WARNING:
DO NOT use 'Tools -> Update PCB from Schematic'
Use ONLY 'Tools -> Update Schematic from PCB'
with 'Update: Net Names' checked (it's unchecked by default)

The PCB is the defining authority now.
Update any net names on PCB, and push them to Schematic.

Using 'Tools -> Update PCB from Schematic' will only bring disaster and heartache
by propogating all Schematic mistakes to the PCB, thus erasing all hope of
straightening it out.

After renaming Net Names on PCB and pushing to Schematic, only SOME Labels will be updated.
The Update Schematic from PCB action only updates the label closest to each pin on each component.
All other net names on the schematic trace between component pins remain the old name
(EG Buss labels), so take great care when renaming begins.
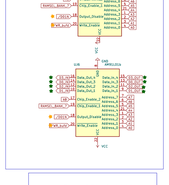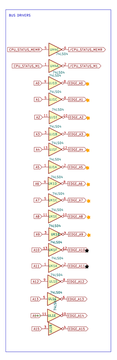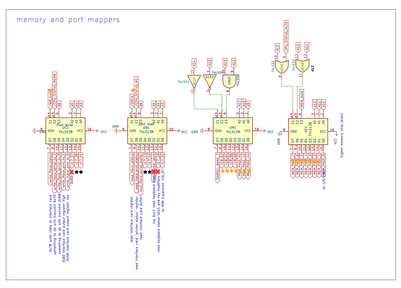
BEWARE also of overlapping text searches when using find/replace
For example, replacing UA5_1 will also modify all UA5_16