WARNING:
DO NOT use 'Tools -> Update PCB from Schematic'
Use ONLY 'Tools -> Update Schematic from PCB'
with 'Update: Net Names' checked (it's unchecked by default)

The PCB is the defining authority now.
Update any net names on PCB, and push them to Schematic.

Using 'Tools -> Update PCB from Schematic' will only bring disaster and heartache by propogating all Schematic mistakes to the PCB, thus erasing all hope of straightening it out.

After renaming Net Names on PCB and pushing to Schematic, only SOME Labels will be updated.
The Update Schematic from PCB action only updates the label closest to each pin on each component.
All other net names on the schematic trace between component pins remain the old name
(EG Buss labels), so take great care when renaming begins.

BEWARE also of overlapping text searches when using find/replace
For example, replacing UA5_1 will also modify all UA5_16

- = Data Bus?
- = Keyboard
- = Interface Board
- = Floppy Disk Controller Board (FDC)
- = RAM Bus
- = NC on Backplane

PHARS WARNING: I have done a lot of feng shui here to push things into some shapes that make sense, unfortunatly every now and again a renaming mistake or wire/bus may get away from me but i try to label them with a "fixme" as i notice them
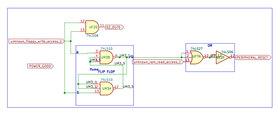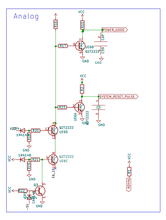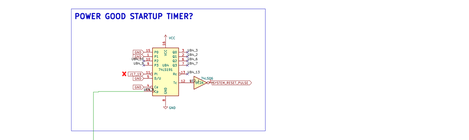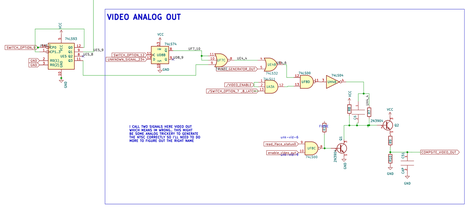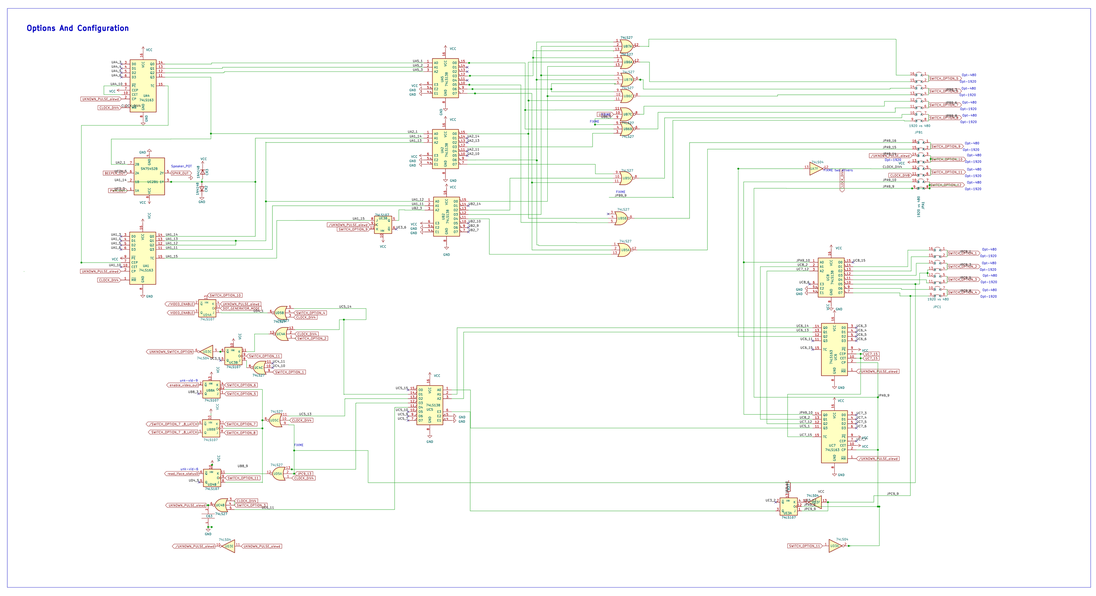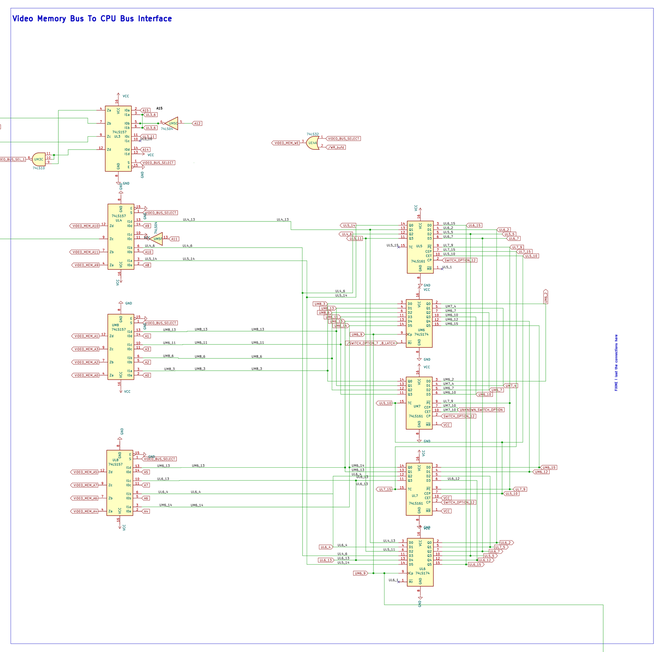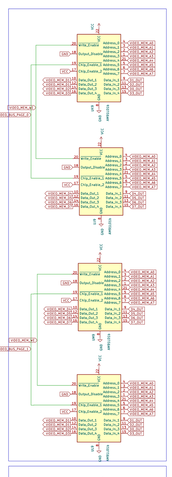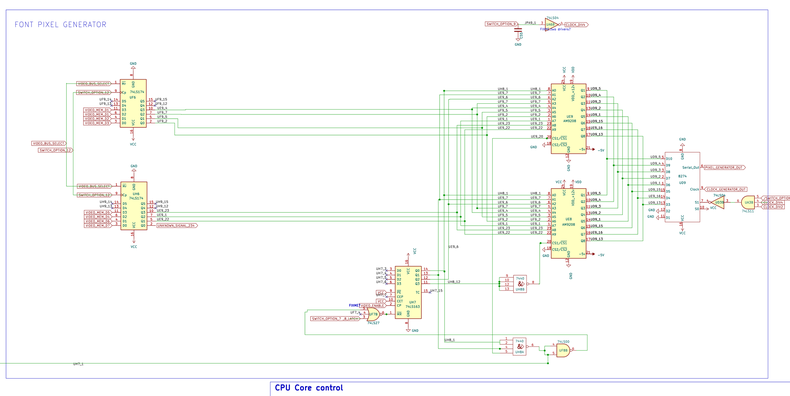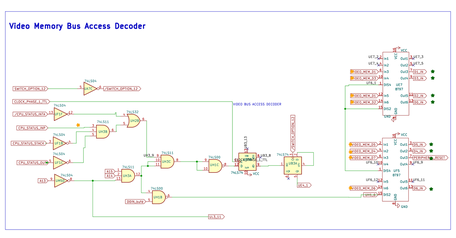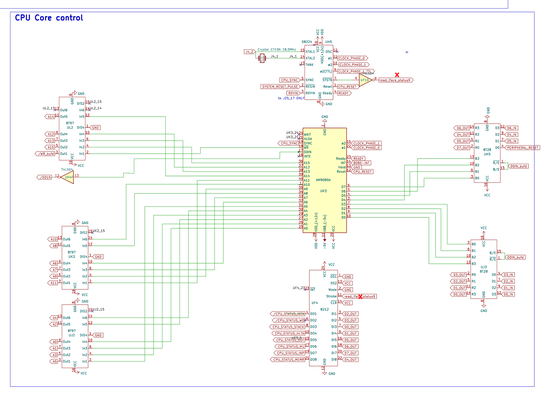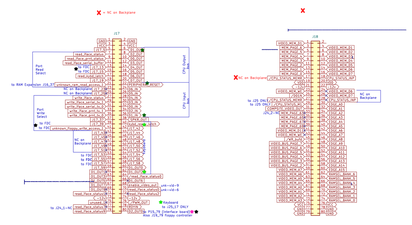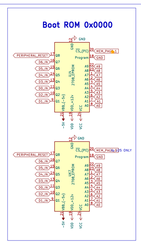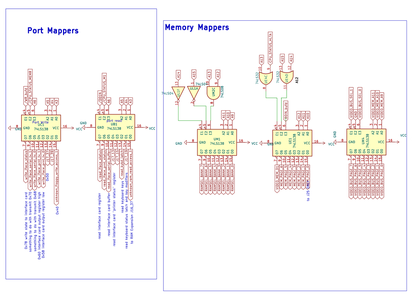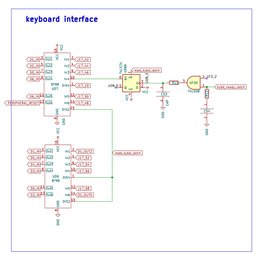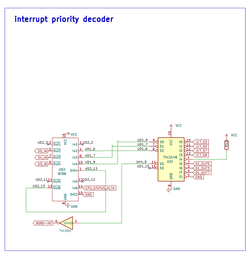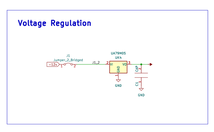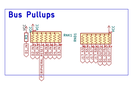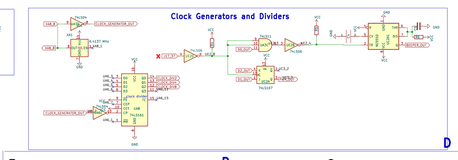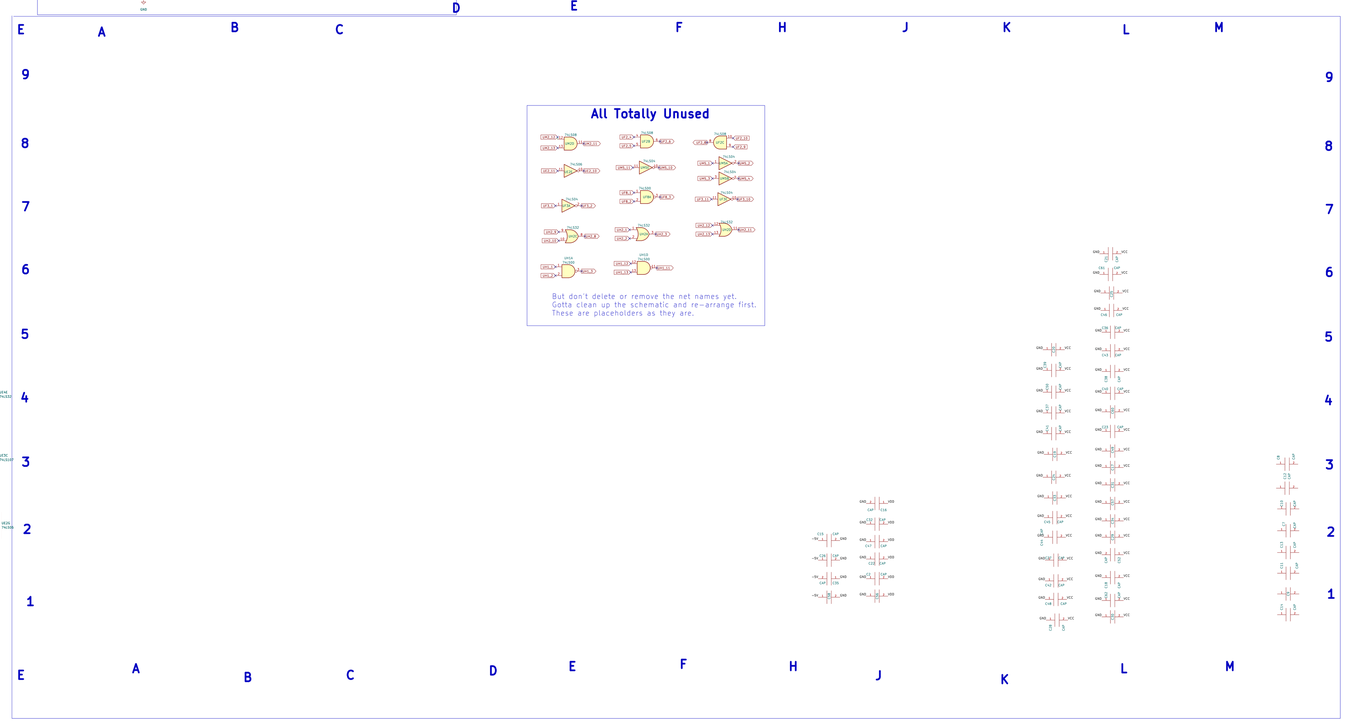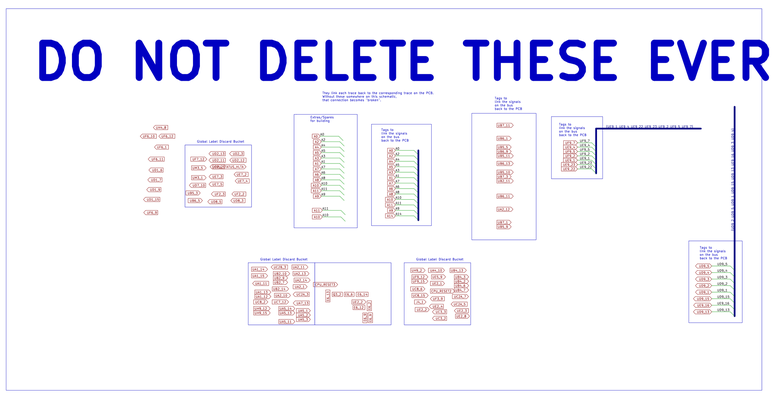
Entrex Trapezoid Terminal
(AKA: ROCC MKIII Terminal and Nixdorf 06418 Terminal)
Processor Board