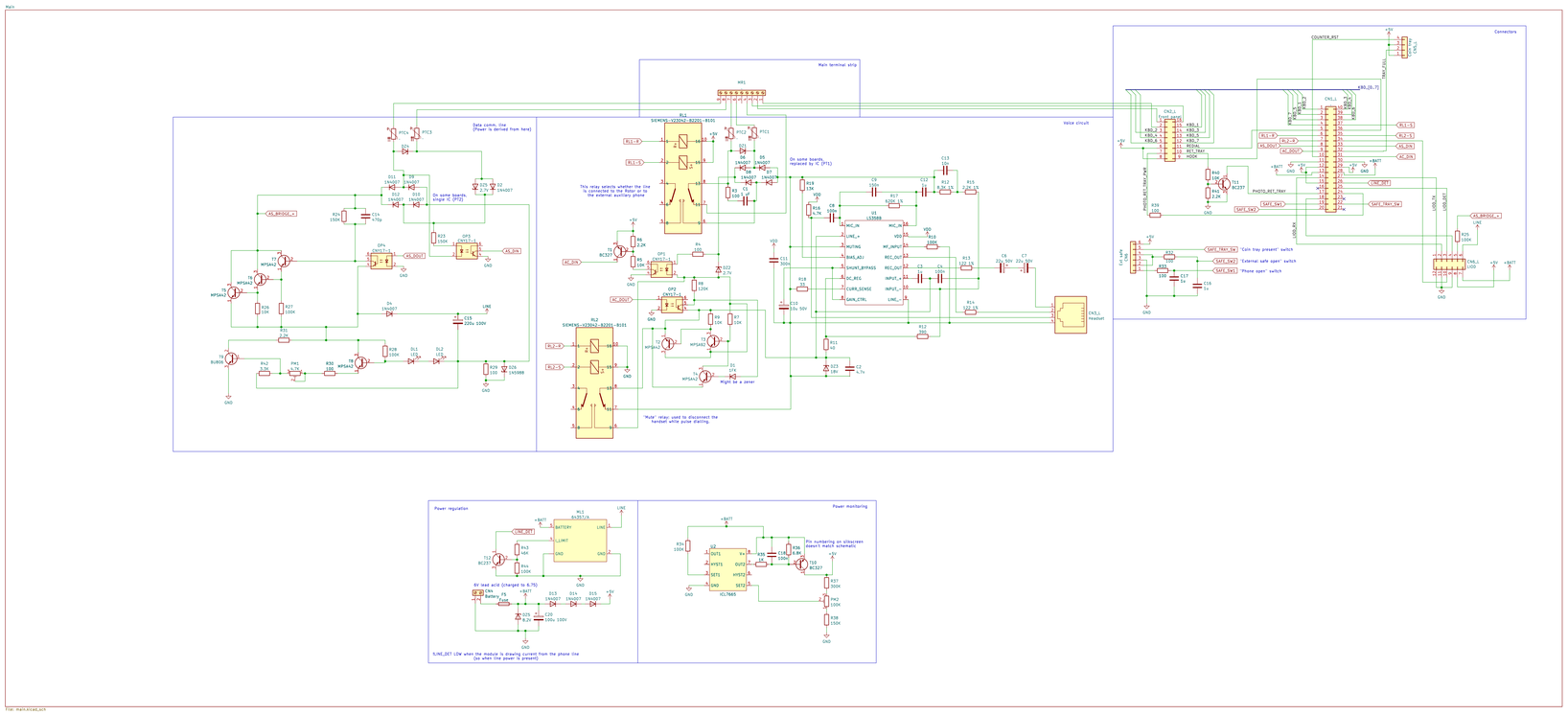

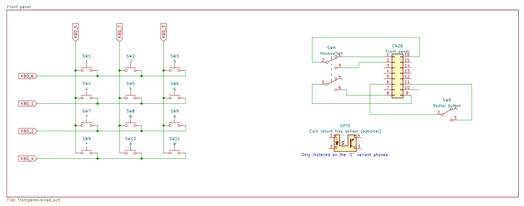

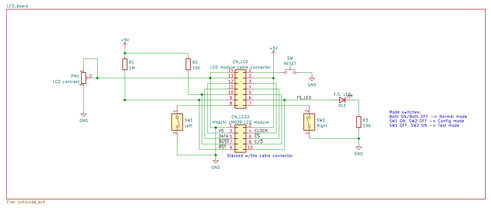

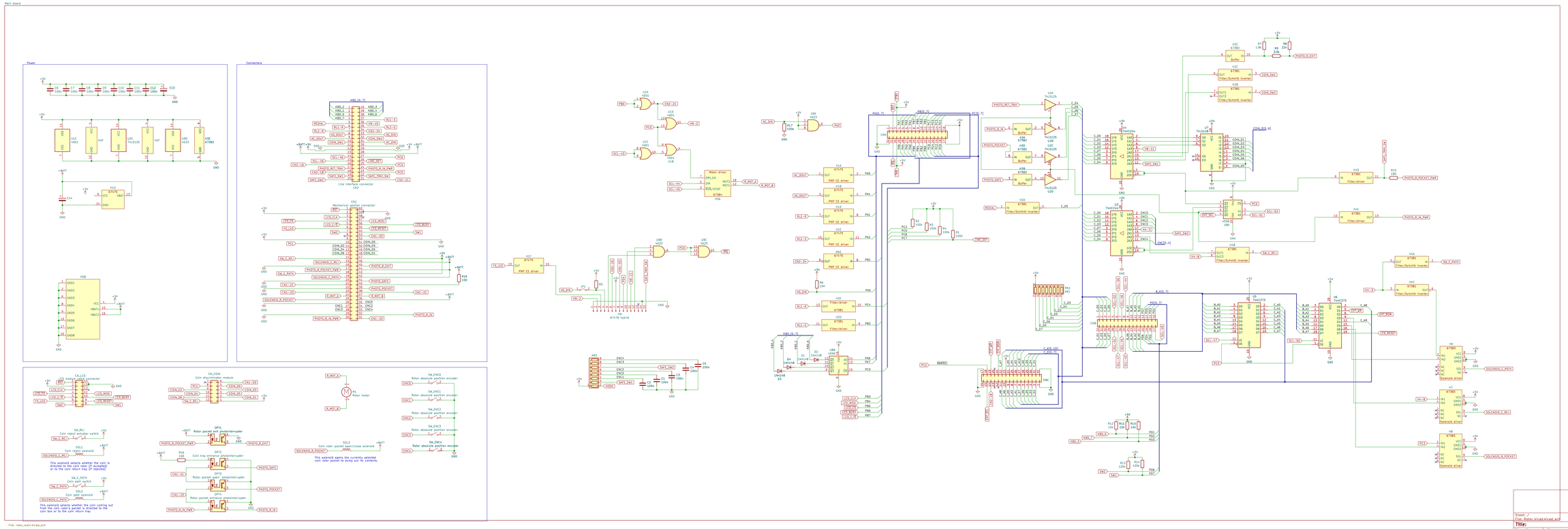

Sheet: /
File: Rotor_Kicad_sch
Title:
Size: A3 Date:
KiCad E.D.A. 9.0.1 Rev:
Id: 1/12