Session 10

P&ID Design

By Dr. Diew Koolpiruck

AGENDA

- P&ID Design

4. P&ID Design

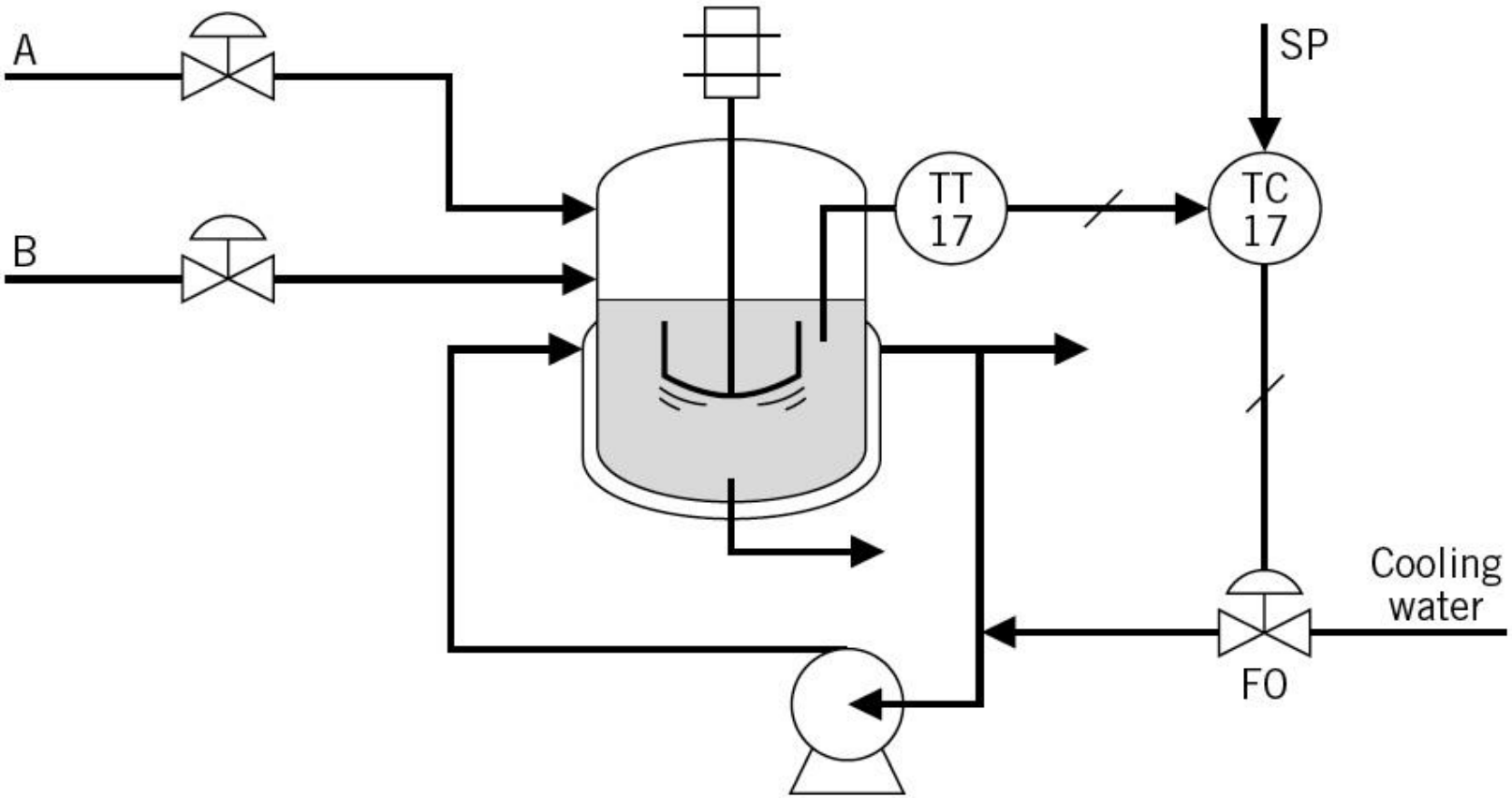

Figure 10-5.1 Reactor for Example 10-5.1.

4. P&ID Design

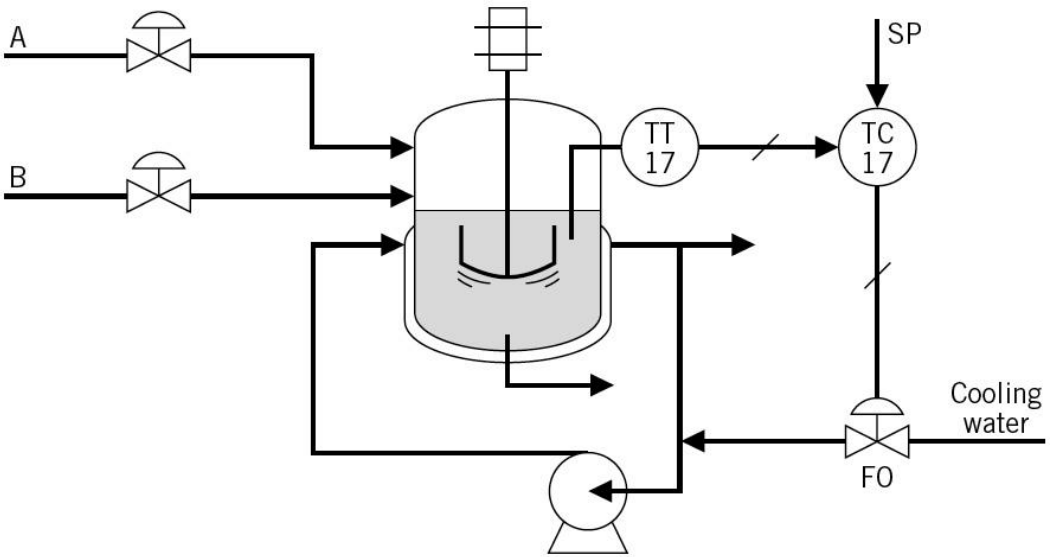

Figure 10-5.1 Reactor for Example 10-5.1.

- The flow of reactants A and B enter the reactor with a ratio R=FB /FA

- Design system to improve temperature control to reduce the disturbance due to the temperature of cooling water

- Avoid the condition that cooling system does not provide enough cooling.

4. P&ID Design

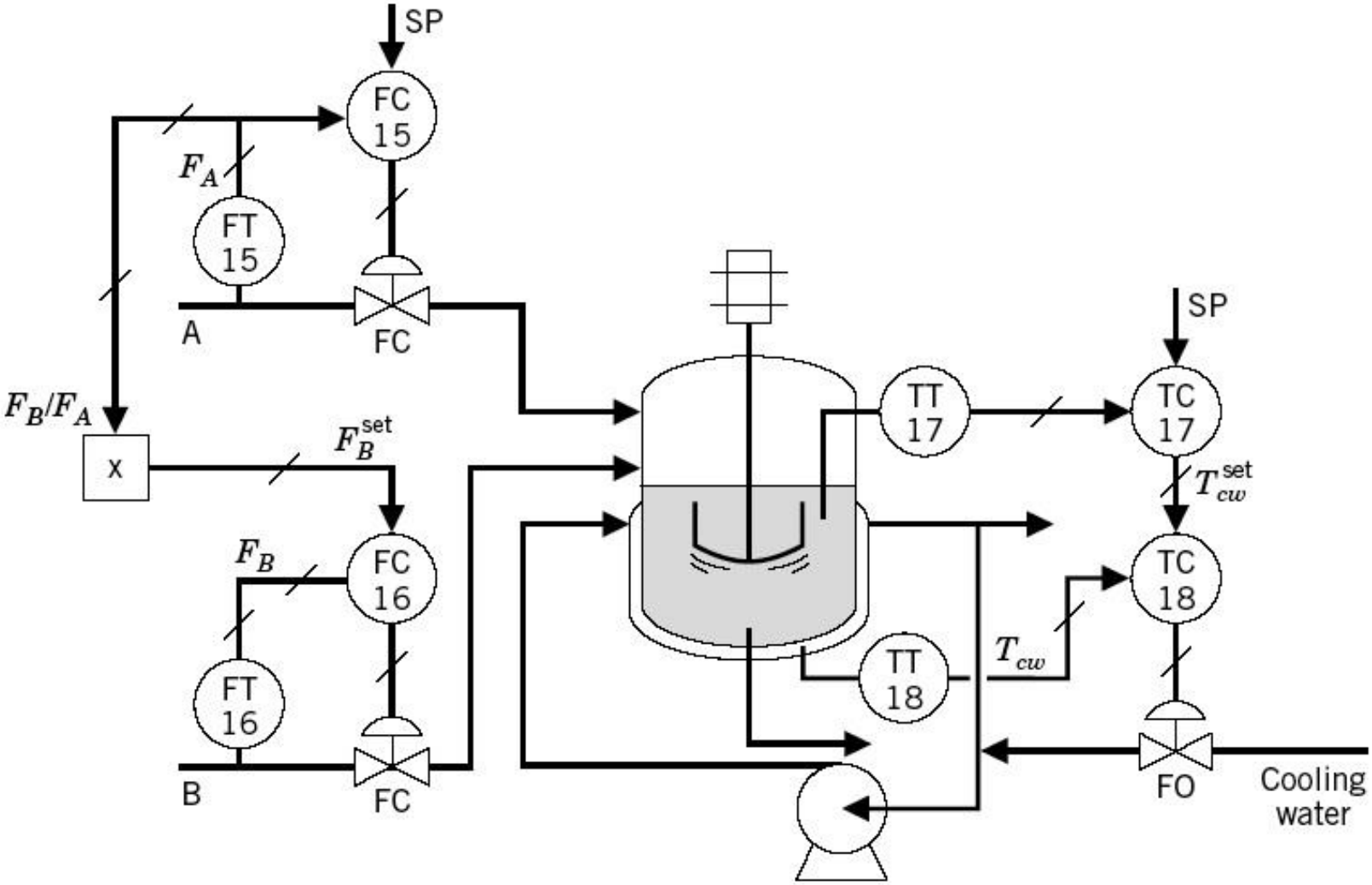

Figure 10-5.8 Cascade control scheme.

4. P&ID Design

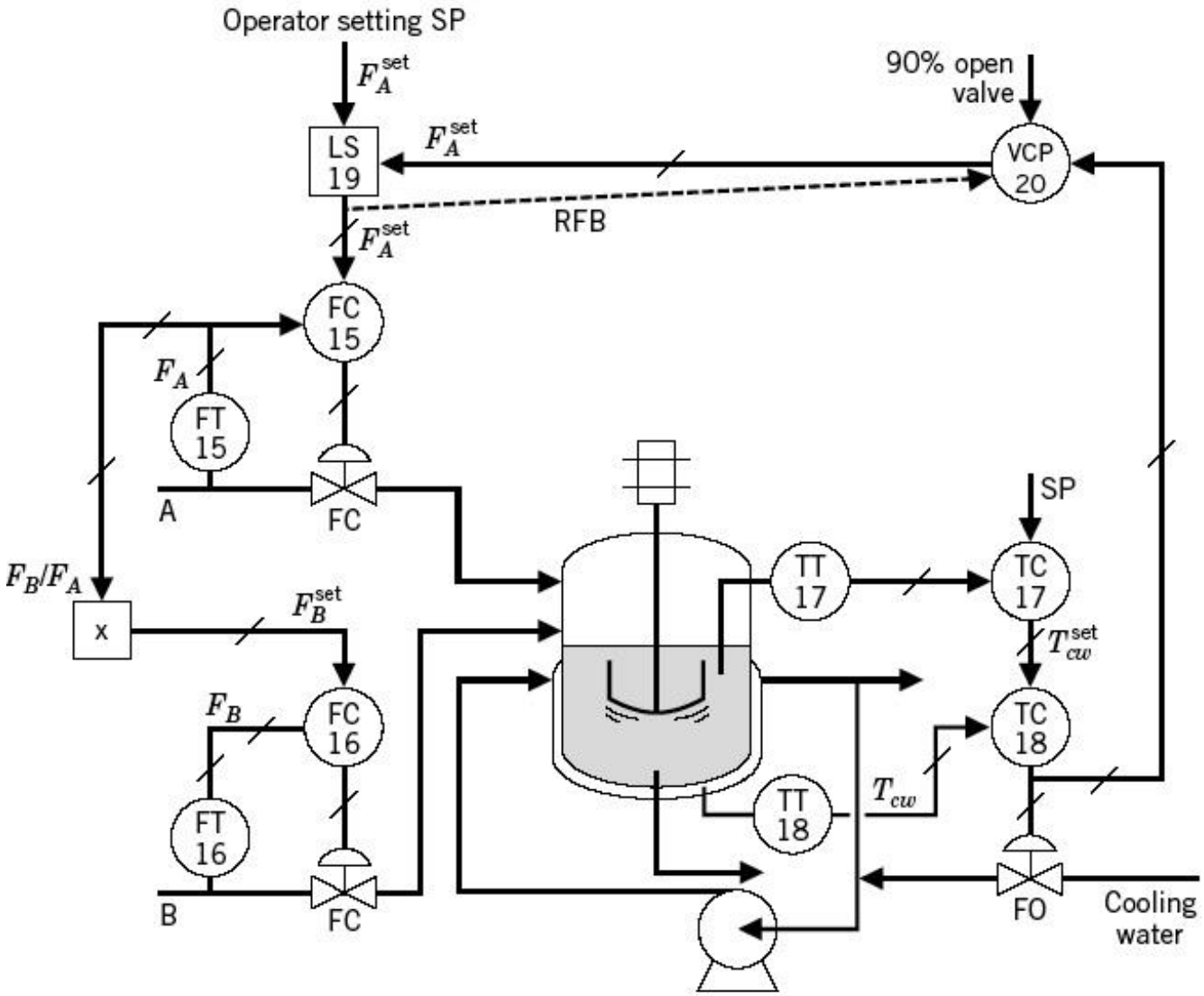

Figure 10-5.11 Override control scheme to compensate for loss of cooling capacity.

Source : Carlos A. Smith, Principles and practice of automatic process control, Wiley.

4. P&ID Design

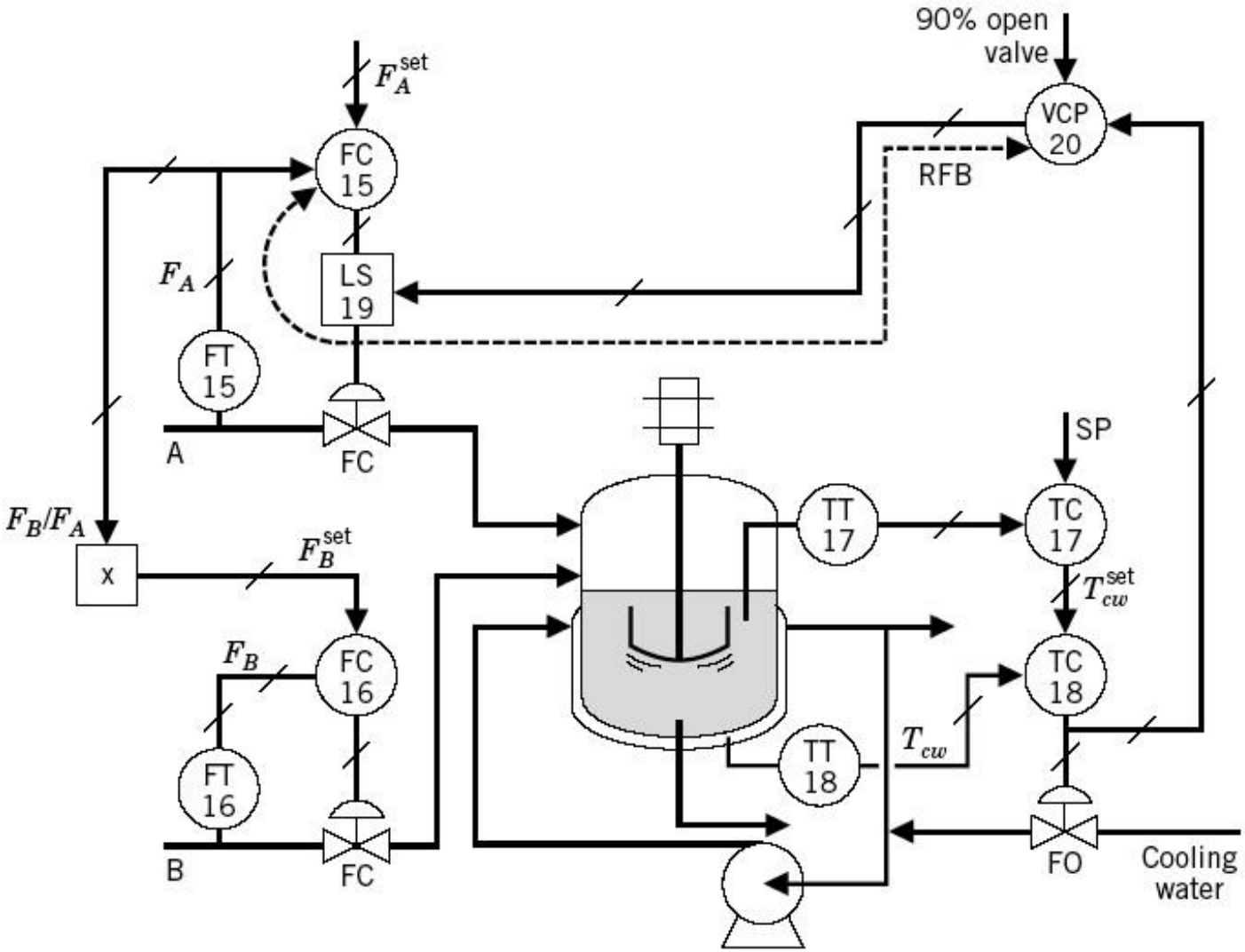

Figure 10-5.12 Another override control scheme.

Source : Carlos A. Smith, Principles and practice of automatic process control, Wiley.

4. P&ID Design

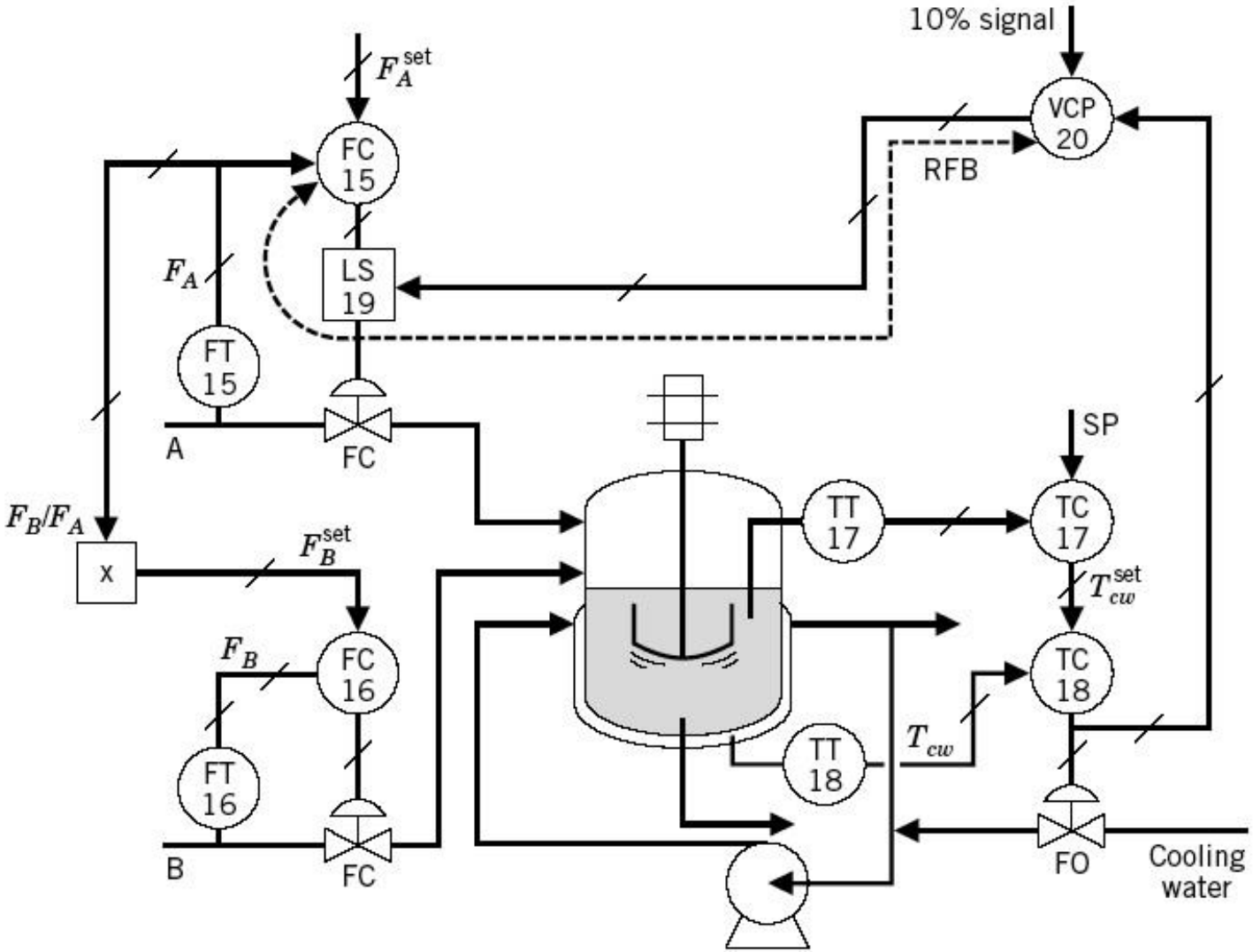

Figure 10-5.13 Override control scheme.

Source : Carlos A. Smith, Principles and practice of automatic process control, Wiley.

4. P&ID Design

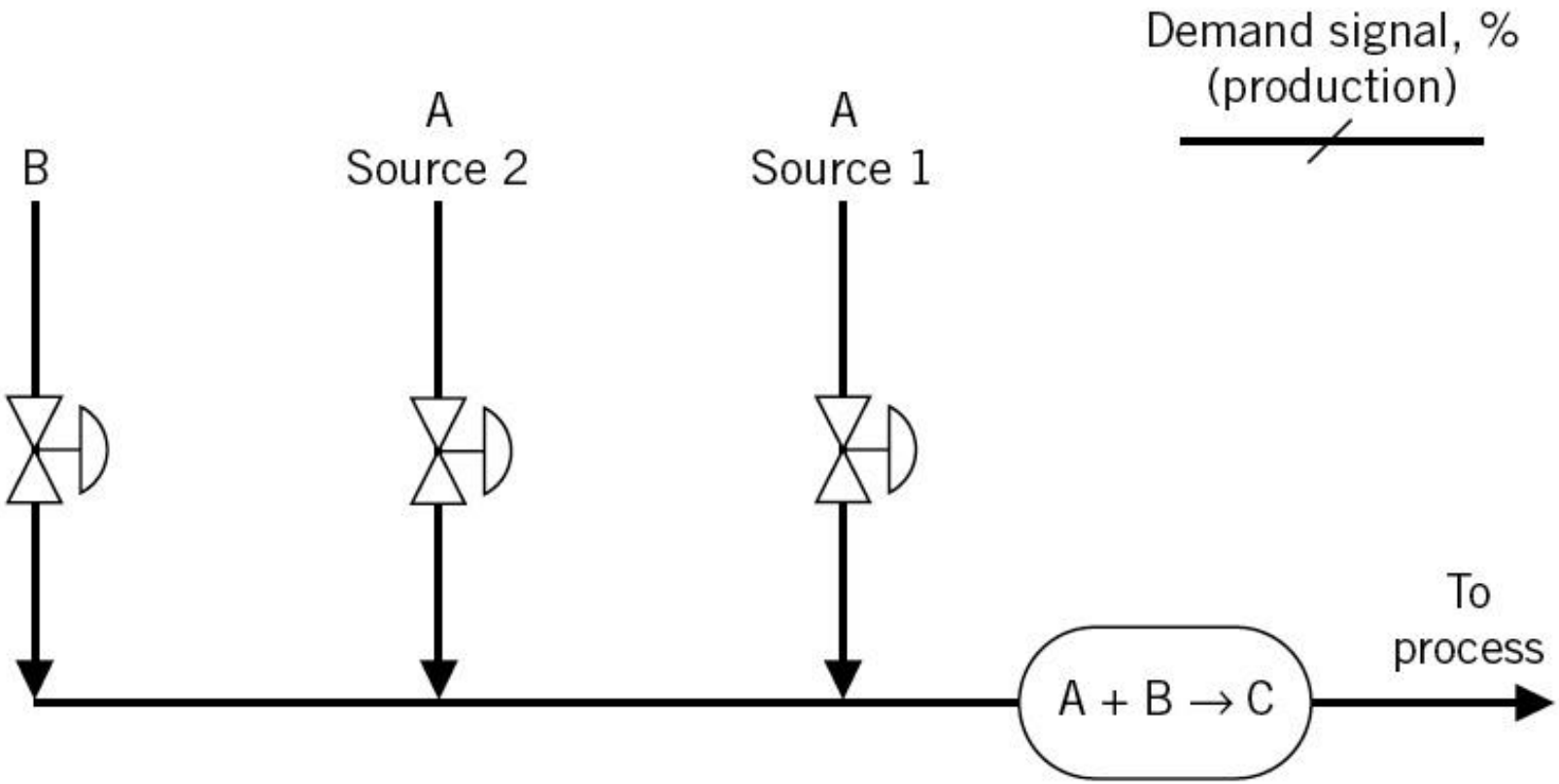

Figure 10-5.15 Reactor for Example 10-5.2.

4. P&ID Design

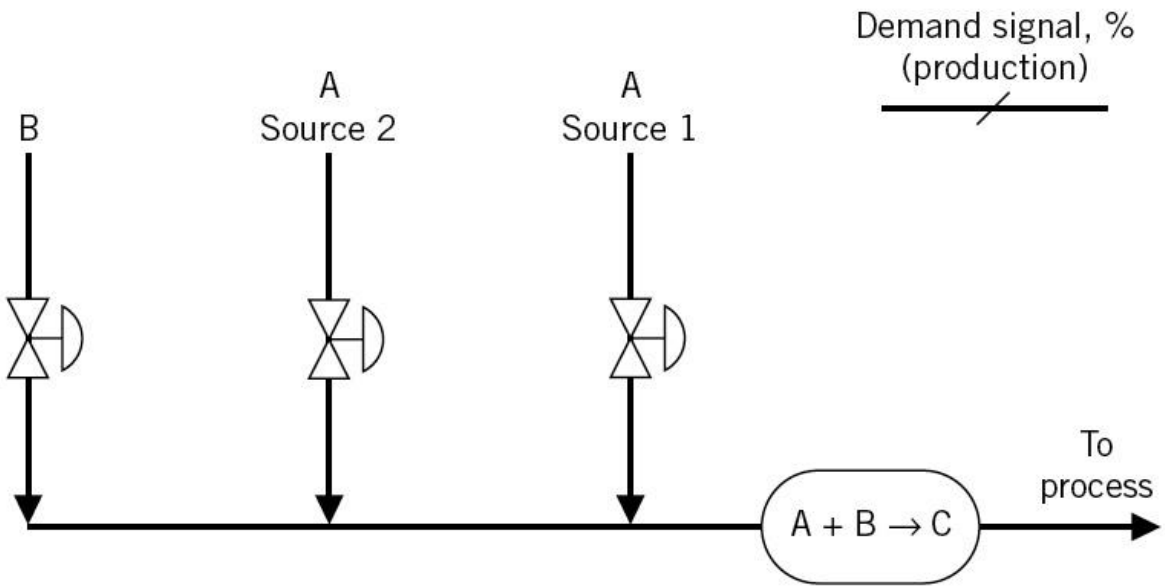

Figure 10-5.15 Reactor for Example 10-5.2.

- The irreversible reaction is A + B -> C.
- The Source 1 is cheaper than the Source 2.
- A maximum instantaneous rate at 100 GPM, and a maximum monthly consumption of 3.744x106 gals. Otherwise, a very high penalty must be paid.

4. P&ID Design

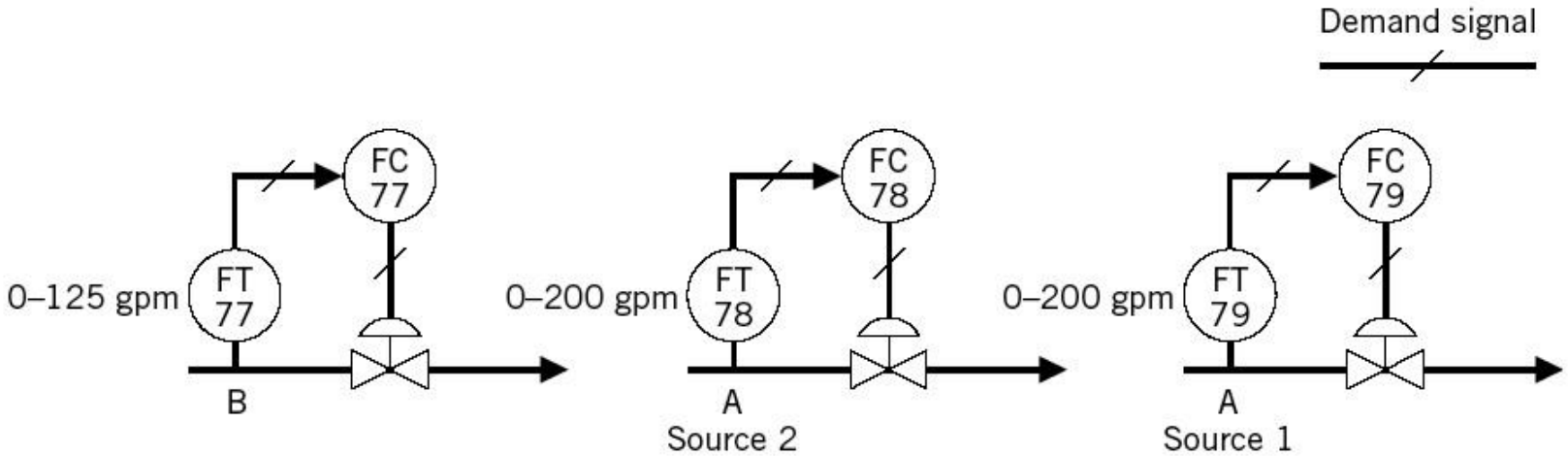

Figure 10-5.16 Flow loop installed in each stream.

- The irreversible reaction is A + B -> C.
- The Source 1 is cheaper than the Source 2.
- A maximum instantaneous rate at 100 GPM, and a maximum monthly consumption of 3.744x106 gals. Otherwise, a very high penalty must be paid.

Source : Carlos A. Smith, Principles and practice of automatic process control, Wiley.

4. P&ID Design

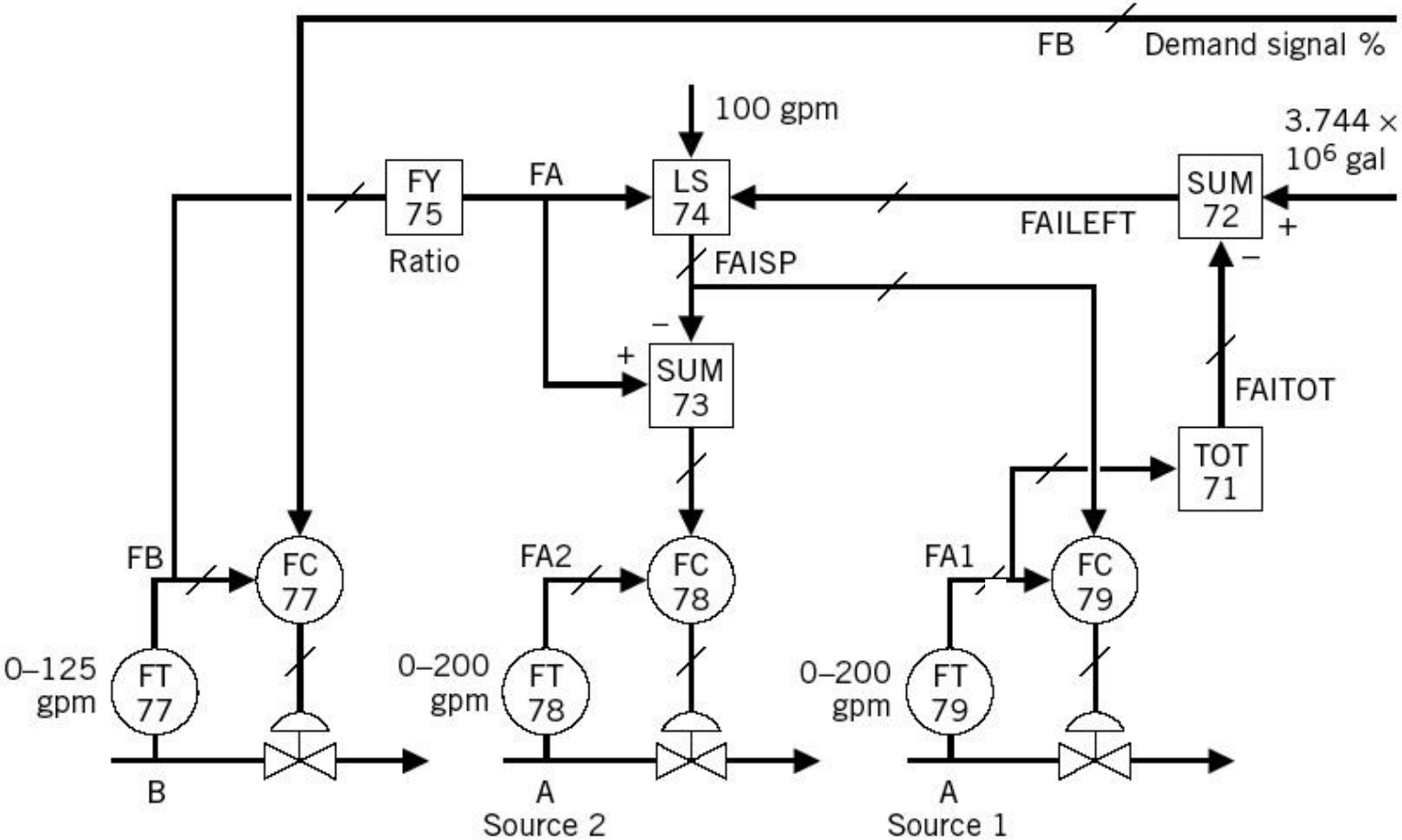

Figure 10-5.17 Control scheme for Example 10-5-2.

• A maximum instantaneous rate at 100 GPM, and a maximum monthly consumption of 3.744x106 gals. Otherwise, a very high penalty must be paid.

Reaction: $2NaOH + Cl_2 \rightarrow NaOCl + H_2O + NaCl$

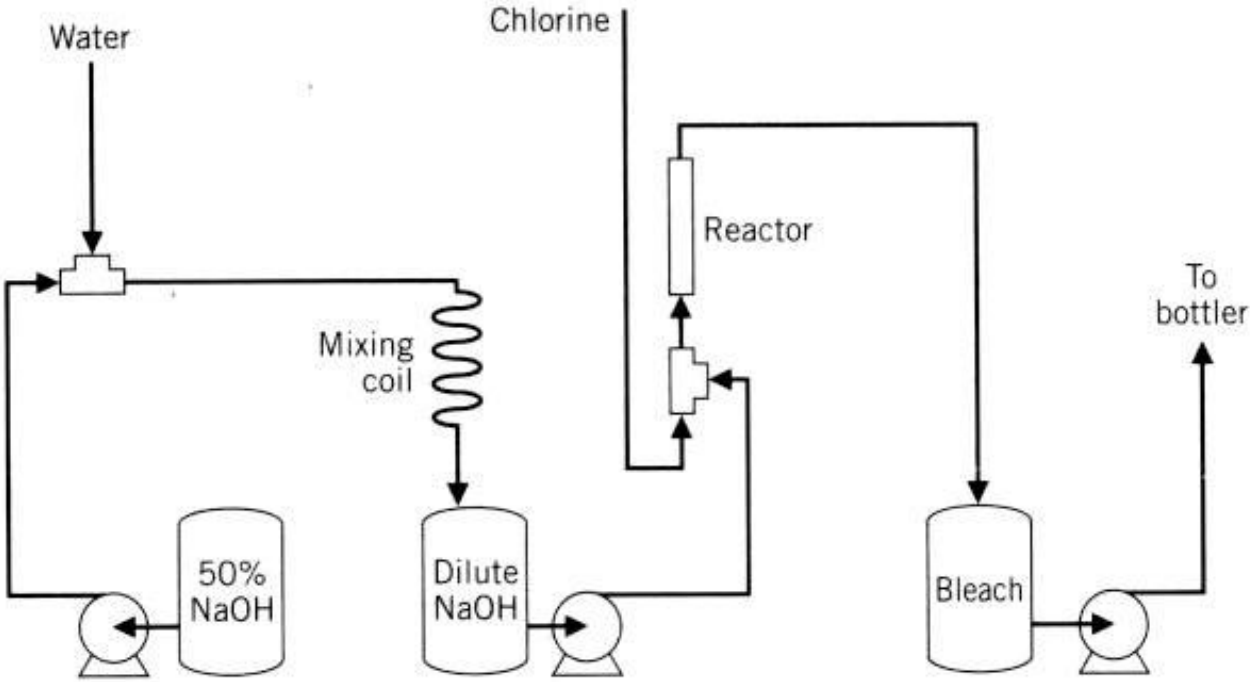

Figure B-1 Sodium hypochlorite process.

- Dilute caustic (NaOH) is continuously prepared, to a set concentration (15% solution), by water dilution of a 50% caustic solution and stored in an intermediate tank.
- From this tank, the solution is pumped to the hypochlorite reactor. Chlorine gas is introduced into the reactor for the reaction.

Source : Carlos A. Smith, Principles and practice of automatic process control, Wiley.

4. P&ID Design

A. How would you set the production rate from this unit?

B. Design the control system to accomplish the following:

1. Control the **level** in the dilution tank.
2. Control the dilution of the 50% caustic solution. The concentration of this stream is to be measured by a conductivity cell. When the dilution of this stream decreases, the output from this cell increases.
3. Control the **level** in the bleach liquor storage tank.
4. Control the ratio of excess NaOH to available Cl, in the outlet stream from the hypochlorite reactor. This ratio is measured by an ORP (oxidationreduction potential) technique. As the ratio increases, the ORP signal also increases.

Specify the action of valves and controllers. Briefly discuss your design.

C. For safety reasons, when the flow of caustic solution from the dilute caustic tank to the reactor fails, the flow of chlorine must be stopped immediately. Design this scheme and explain it.

Source : Carlos A. Smith, Principles and practice of automatic process control, Wiley.

Reaction: $2NaOH + Cl_2 \rightarrow NaOCl + H_2O + NaCl$

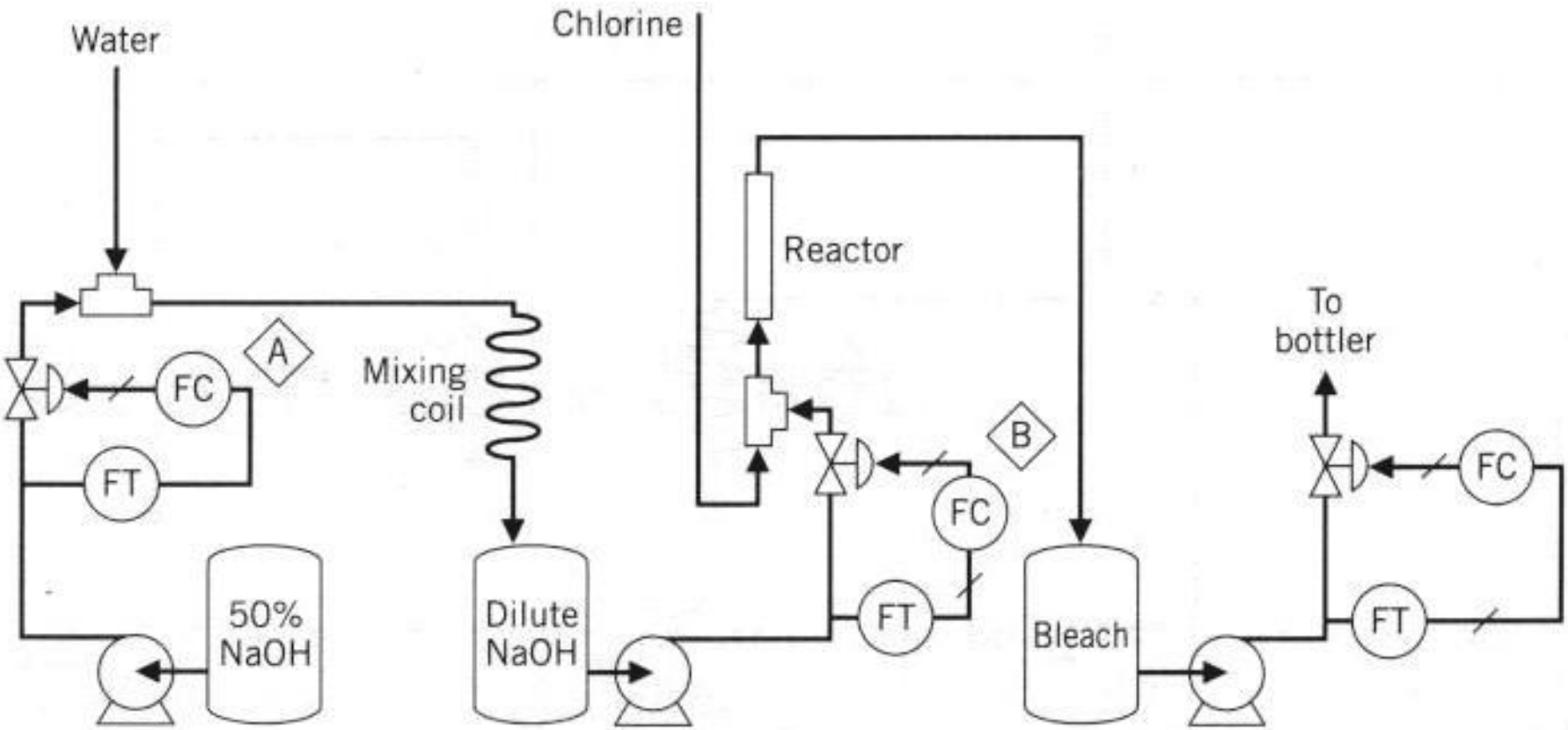

Figure B-3 Possible locations for control of production rate.

Source : Carlos A. Smith, Principles and practice of automatic process control, Wiley.

4. P&ID Design

A. How would you set the production rate from this unit?

B. Design the control system to accomplish the following:

1. Control the **level** in the dilution tank.

2. Control the **dilution concentration** of the 50% caustic solution. The concentration of this stream is to be measured by a conductivity cell. When the dilution of this stream decreases, the output from this cell increases.

3. Control the **level** in the bleach liquor storage tank.

4. Control the **ratio** of excess NaOH to available Cl, in the outlet stream from the hypochlorite reactor. This ratio is measured by an ORP (oxidationreduction potential) technique. As the ratio increases, the ORP signal alsoincreases.

Specify the action of valves and controllers. Briefly discuss your design.

C. For safety reasons, when the flow of caustic solution from the dilute caustic tankto the reactor fails, the flow of chlorine must be stopped immediately. Design this scheme and explain it.

Source : Carlos A. Smith, Principles and practice of automatic process control, Wiley.

4. P&ID Design

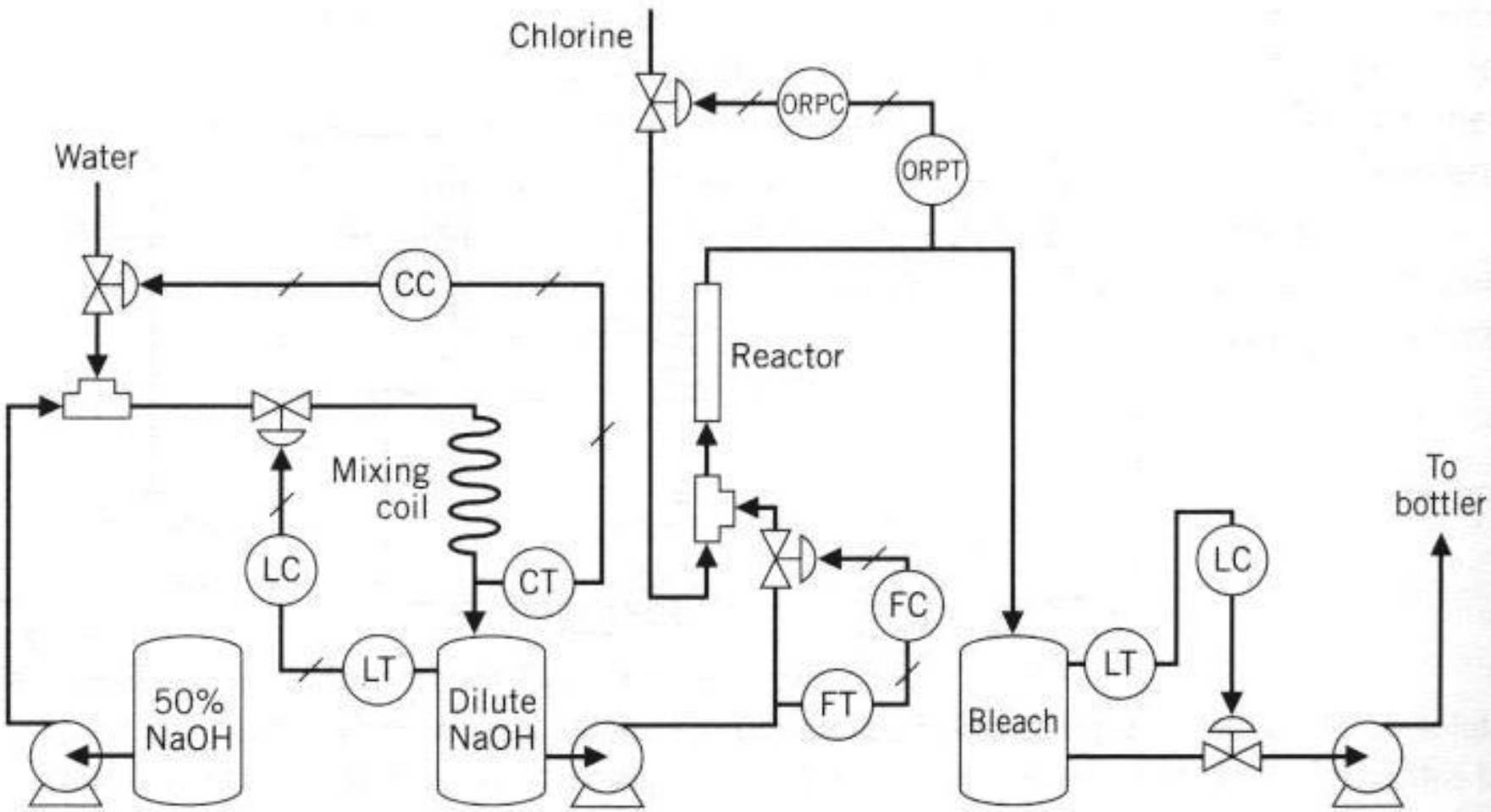

Figure B-4 First proposed schemes.

Source : Carlos A. Smith, Principles and practice of automatic process control, Wiley.

4. P&ID Design

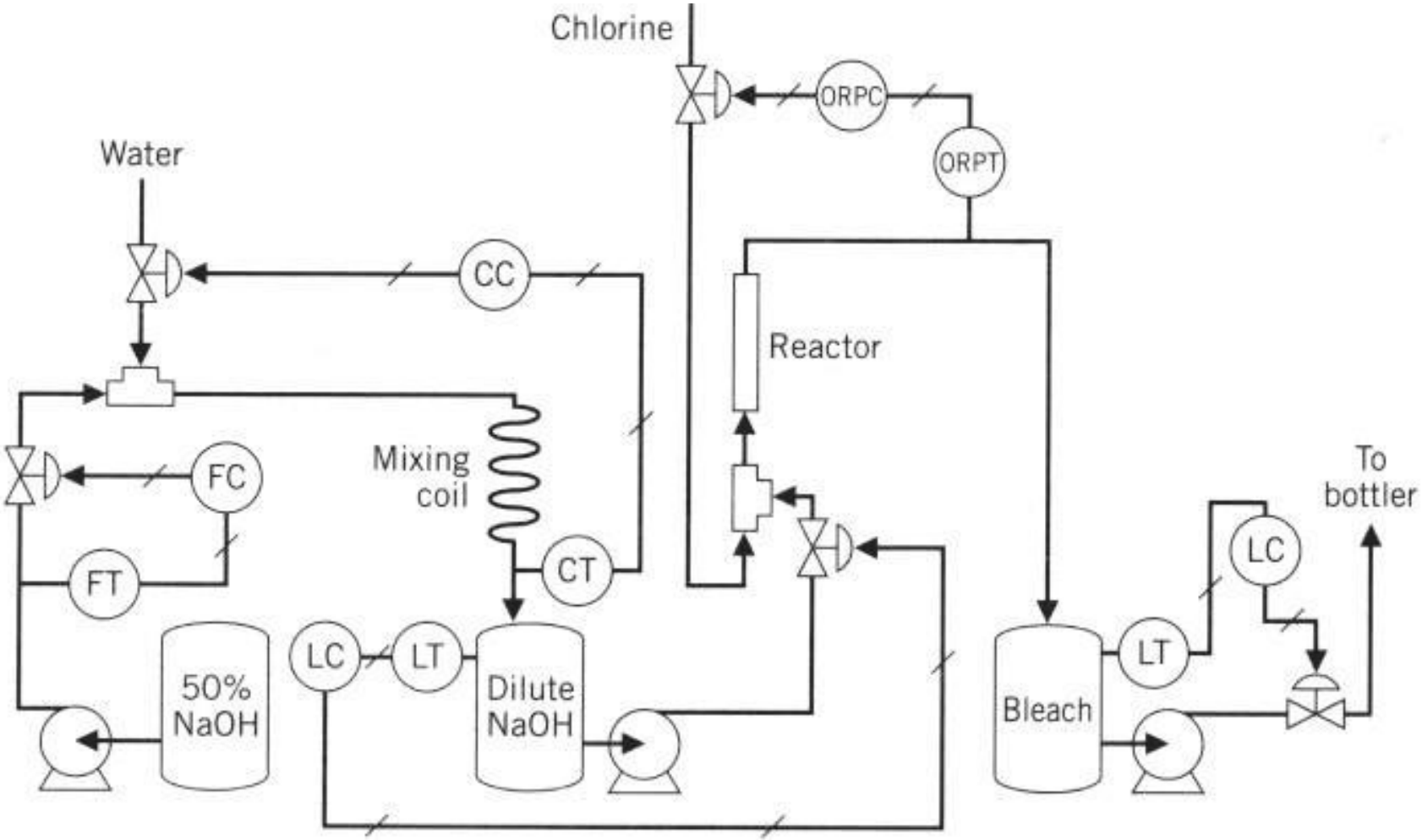

Figure B-7 Production control manipulating flow of concentrated NaOH.

Source : Carlos A. Smith, Principles and practice of automatic process control, Wiley.

4. P&ID Design

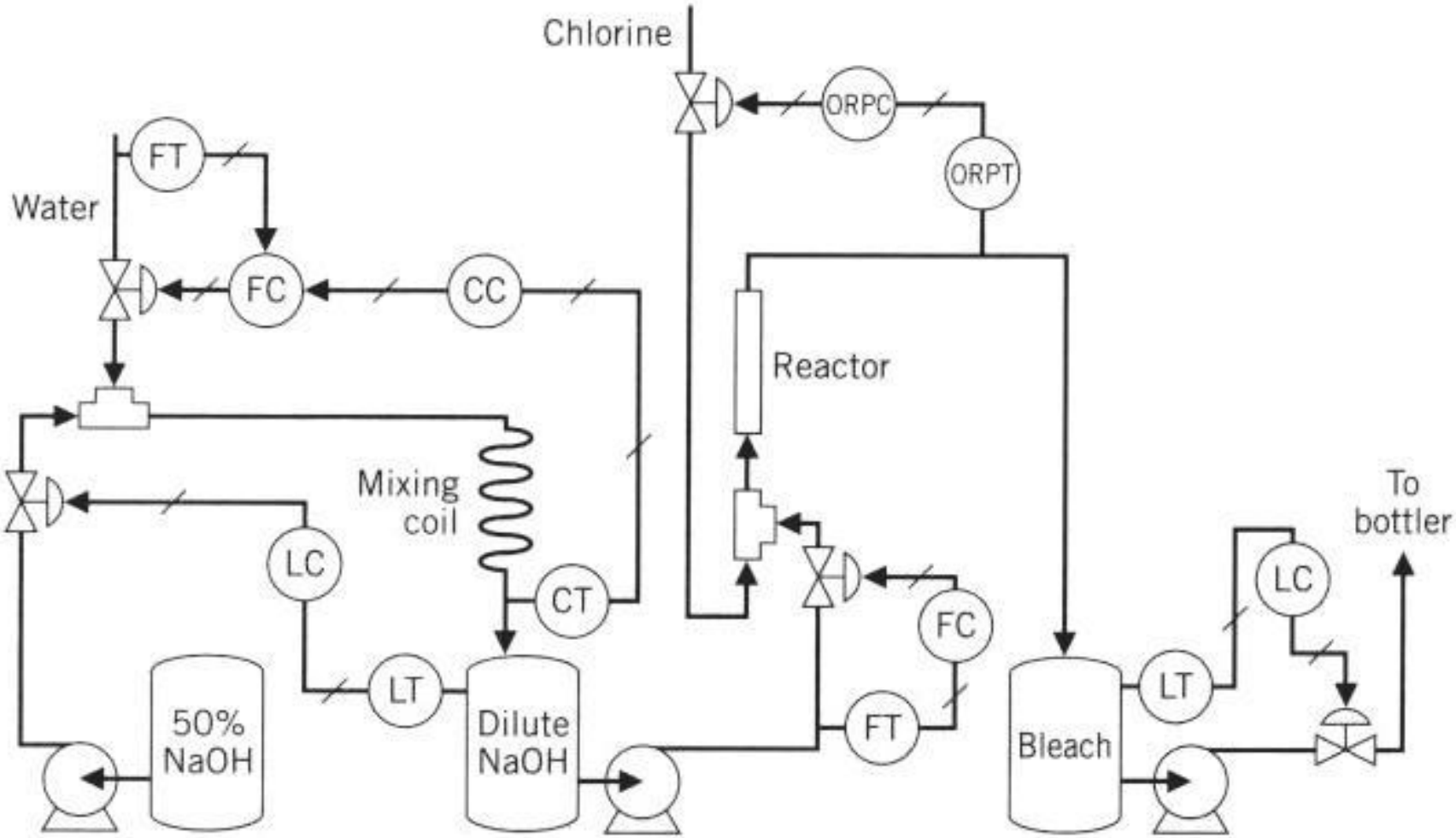

Figure B-8 Cascade control in dilution water stream.

Source : Carlos A. Smith, Principles and practice of automatic process control, Wiley.

4. P&ID Design

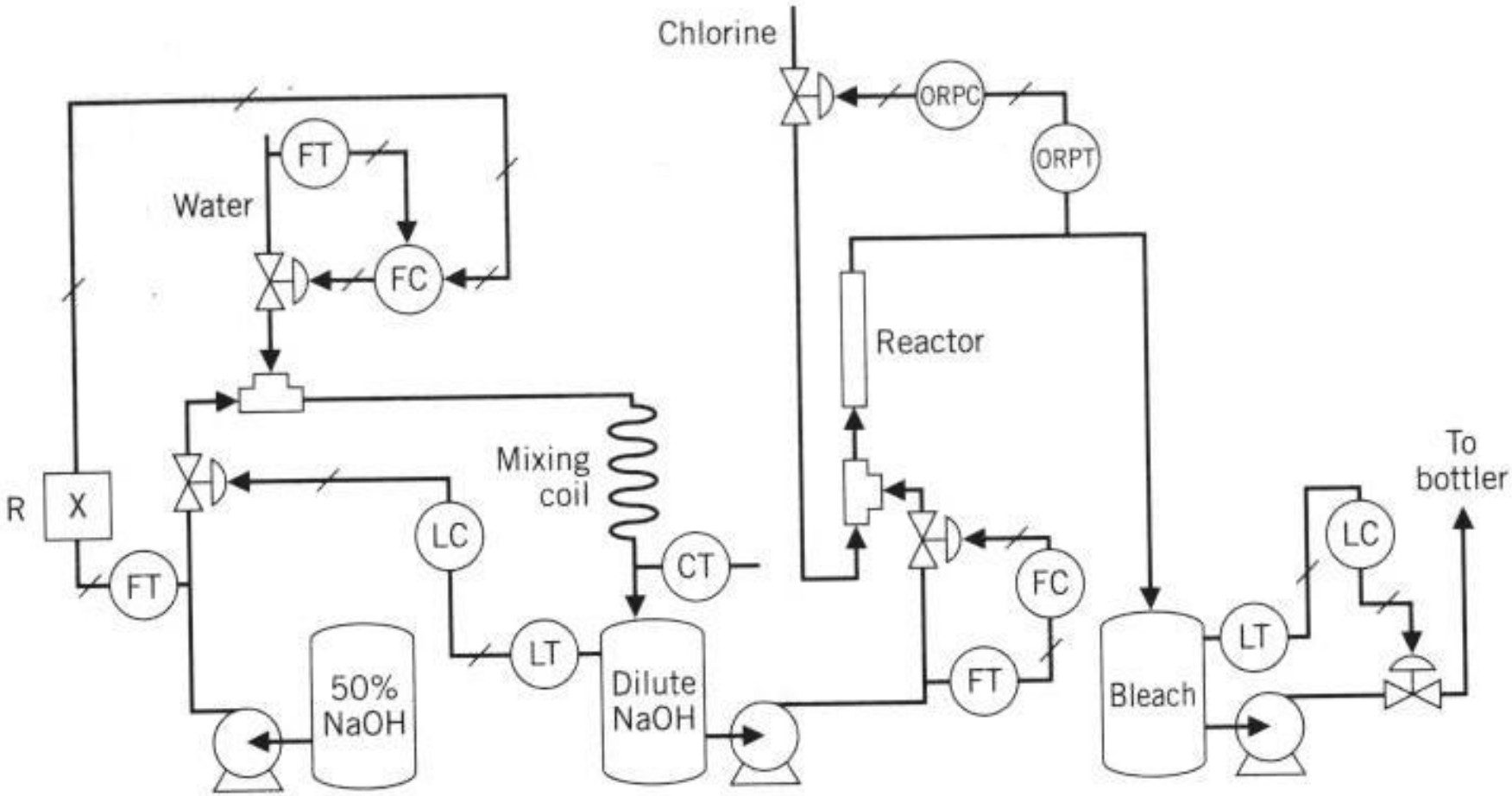

Figure B-9 Ratio control to improve performance of dilution control.

Source : Carlos A. Smith, Principles and practice of automatic process control, Wiley.

4. P&ID Design

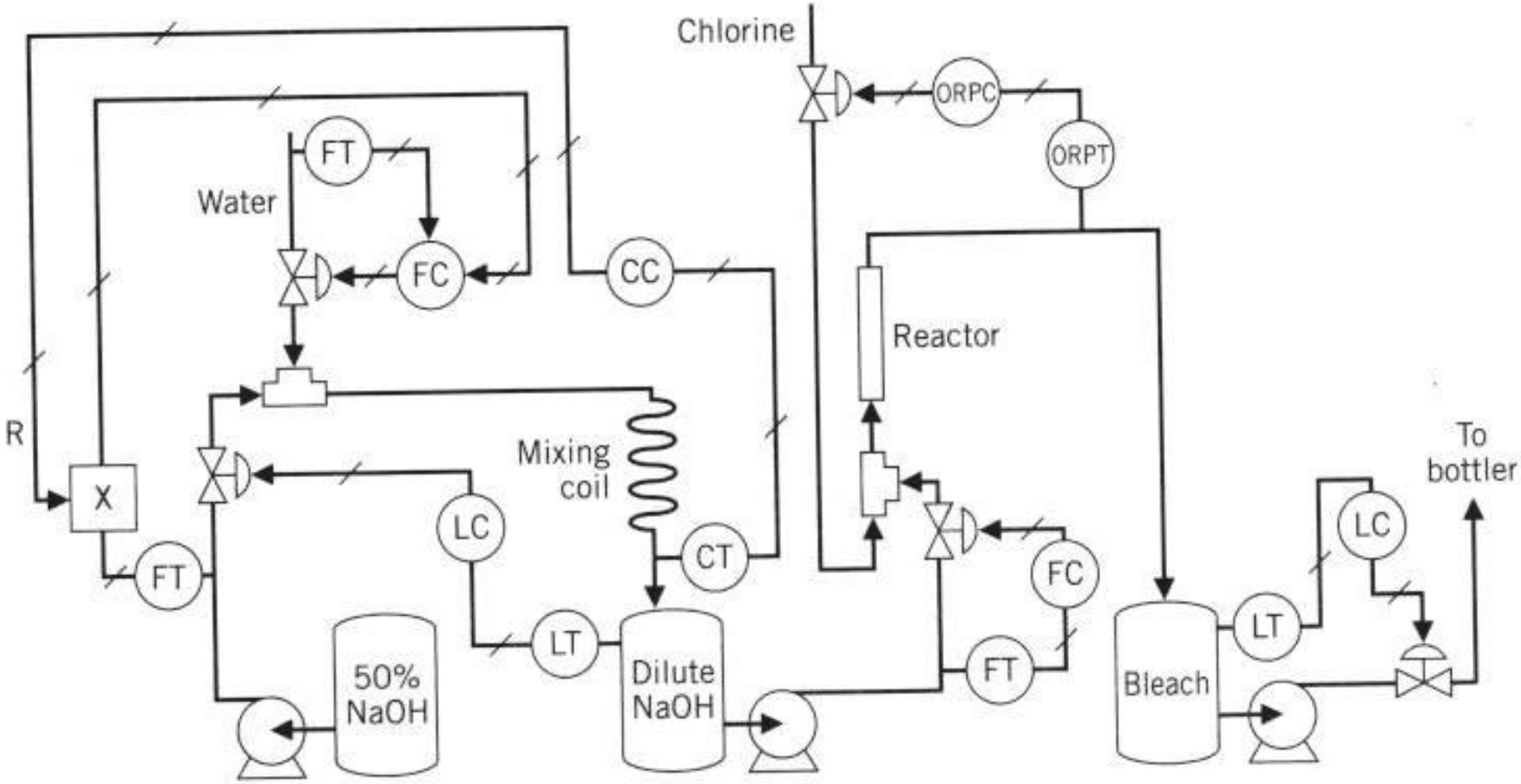

Figure B-10 Feedforward control to improve performance of dilution control.

Source : Carlos A. Smith, Principles and practice of automatic process control, Wiley.

4. P&ID Design

A. How would you set the production rate from this unit?

B. Design the control system to accomplish the following:

1. Control the **level** in the dilution tank.

2. Control the **dilution concentration** of the 50% caustic solution. The concentration of this stream is to be measured by a conductivity cell. When the dilution of this stream decreases, the output from this cell increases.

3. Control the **level** in the bleach liquor storage tank.

4. Control the **ratio** of excess NaOH to available Cl, in the outlet stream from the hypochlorite reactor. This ratio is measured by an ORP (oxidationreduction potential) technique. As the ratio increases, the ORP signal alsoincreases.

Specify the action of valves and controllers. Briefly discuss your design.

C. For safety reasons, when the flow of caustic solution from the dilute caustic tankto the reactor fails, the flow of chlorine must be stopped immediately. Design this scheme and explain it.

Source : Carlos A. Smith, Principles and practice of automatic process control, Wiley.

4. P&ID Design

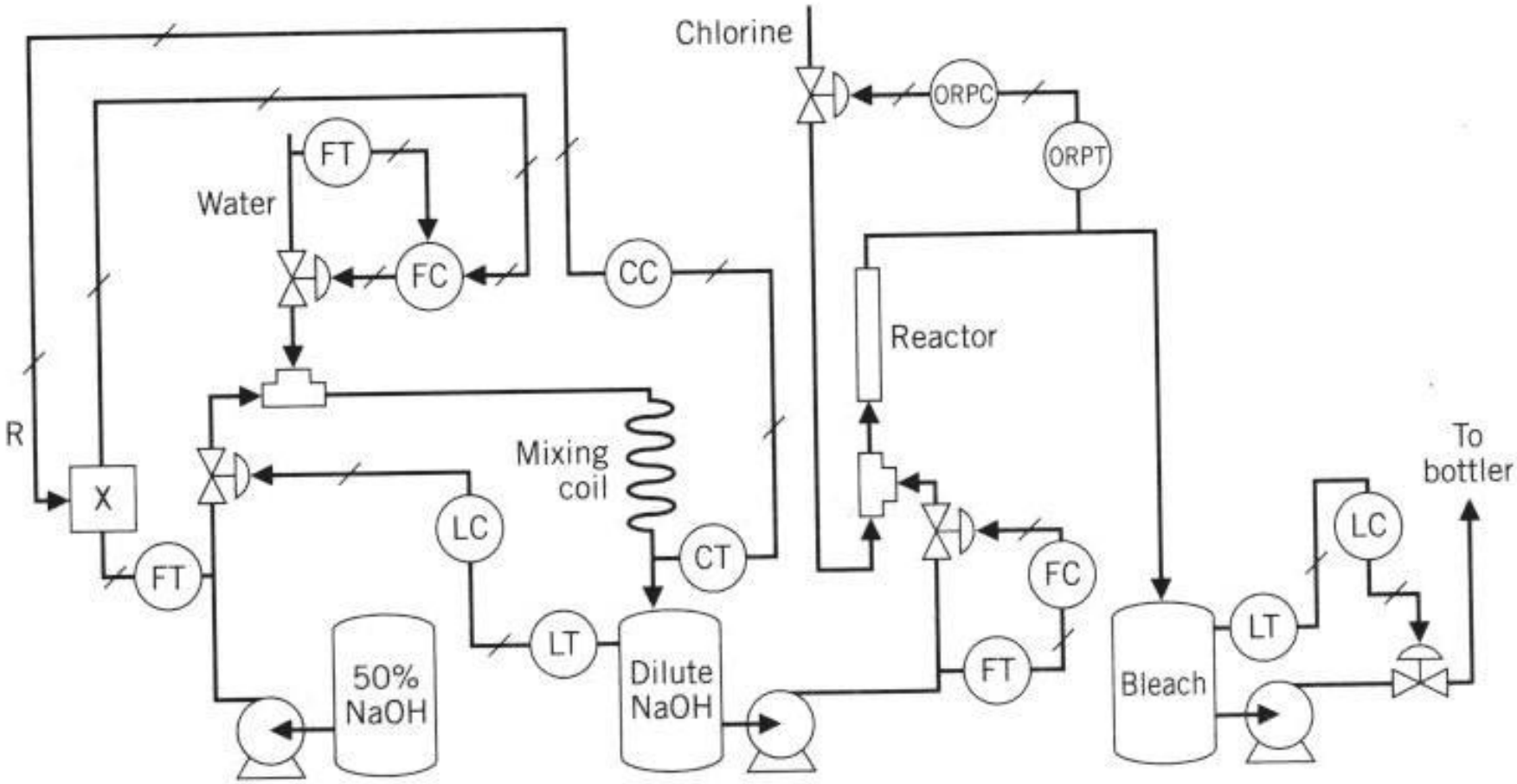

Figure B-10 Feedforward control to improve performance of dilution control.

Source : Carlos A. Smith, Principles and practice of automatic process control, Wiley.