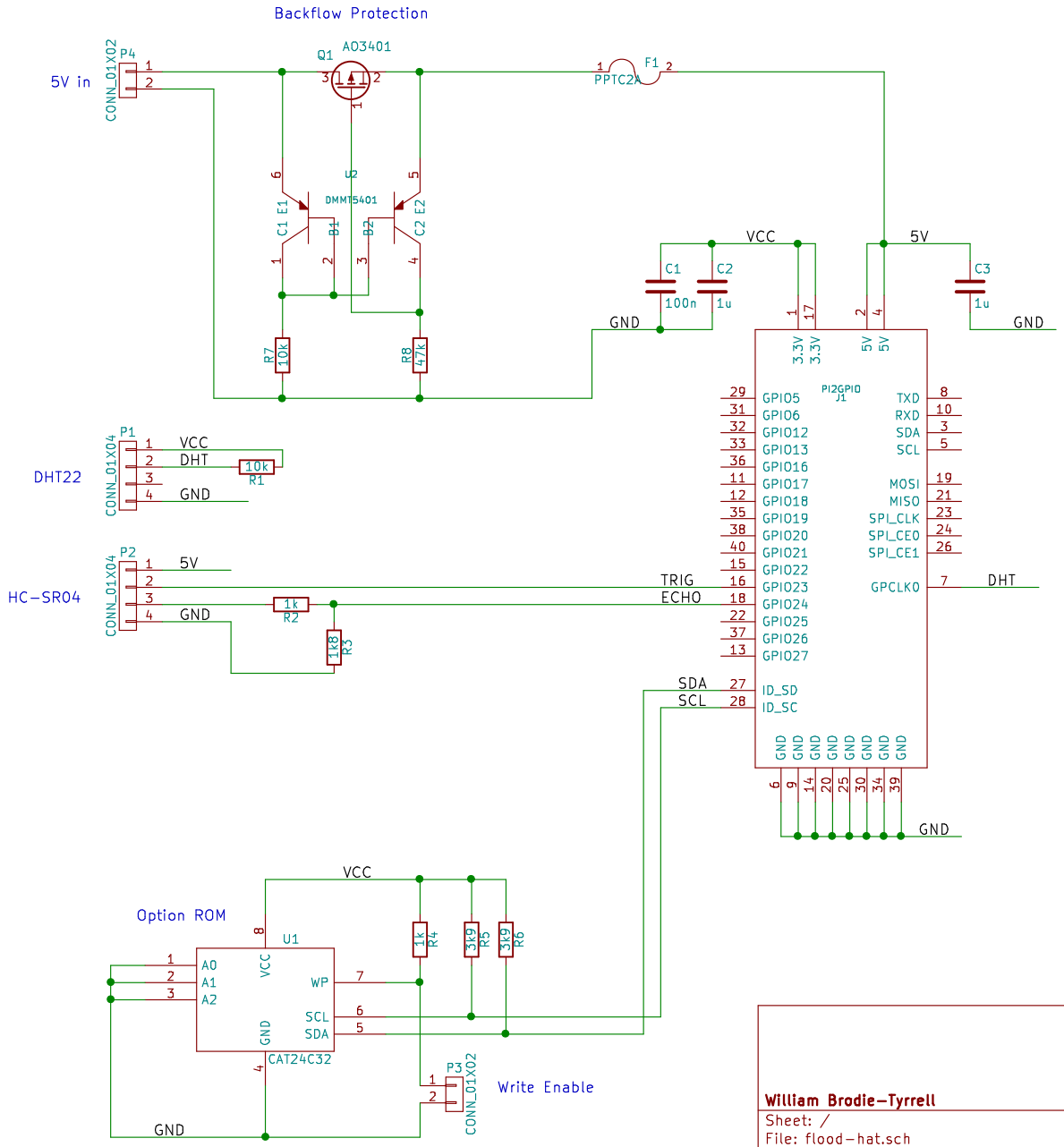

William Brodie-Tyrrell

Sheet: /

File: flood-hat.sch

Title: IOT Flood Sensor HAT

Size: A4	Date: 2016-08-05	**Rev: a**
KiCad E.D.A. kicad 4.0.2+e4-622538ubuntu15.04.1-stable		Id: 1/1