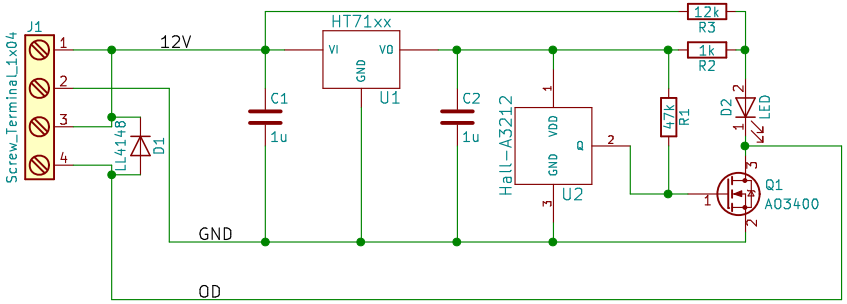

Sheet: /
File: hall-relay.sch

Title: Hall Effect Relay

Size: A4	Date: 2017-12-18	**Rev: A**
KiCad E.D.A. kicad 4.0.5-e0-633749ubuntu15.04.1		Id: 1/1