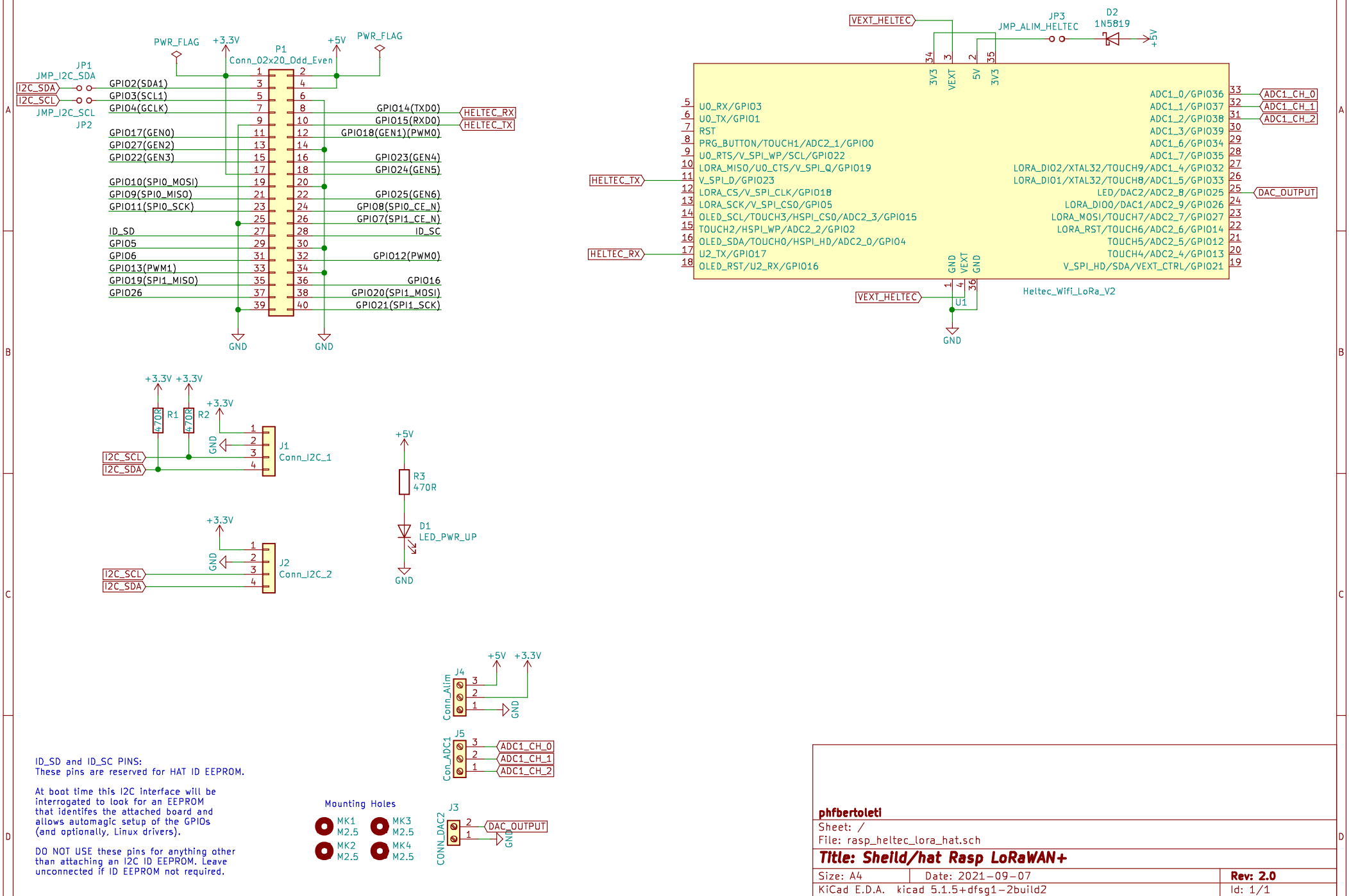
P1
Conn_02x20_Odd_Even
JP1
JMP_I2C_SDA
JP2
JMP_I2C_SCL
I2C_SDA
I2C_SCL
PWR_FLAG
+3.3V
+5V
GND
GPIO2(SDA1)
GPIO3(SCL1)
GPIO4(GCLK)
GPIO17(GEN0)
GPIO27(GEN2)
GPIO22(GEN3)
GPIO10(SPI0_MOSI)
GPIO9(SPI0_MISO)
GPIO11(SPI0_SCK)
ID_SD
GPIO5
GPIO6
GPIO13(PWM1)
GPIO19(SPI1_MISO)
GPIO26
GPIO14(TXD0)
GPIO15(RXD0)
GPIO18(GEN1)(PWM0)
GPIO23(GEN4)
GPIO24(GEN5)
GPIO25(GEN6)
GPIO8(SPI0_CE_N)
GPIO7(SPI1_CE_N)
ID_SC
GPIO12(PWM0)
GPIO16
GPIO20(SPI1_MOSI)
GPIO21(SPI1_SCK)
HELTEC_RX
HELTEC_TX
VEXT_HELTEC
JP3
JMP_ALIM_HELTEC
D2
1N5819
U1
Heltec_Wifi_LoRa_V2
U0_RX/GPIO3
U0_TX/GPIO1
RST
PRG_BUTTON/TOUCH1/ADC2_1/GPIO0
U0_RTS/V_SPI_WP/SCL/GPIO22
LORA_MISO/U0_CTS/V_SPI_Q/GPIO19
V_SPI_D/GPIO23
LORA_CS/V_SPI_CLK/GPIO18
LORA_SCK/V_SPI_CS0/GPIO5
OLED_SCL/TOUCH3/HSPI_CS0/ADC2_3/GPIO15
TOUCH2/HSPI_WP/ADC2_2/GPIO2
OLED_SDA/TOUCH0/HSPI_HD/ADC2_0/GPIO4
U2_TX/GPIO17
OLED_RST/U2_RX/GPIO16
ADC1_0/GPIO36
ADC1_1/GPIO37
ADC1_2/GPIO38
ADC1_3/GPIO39
ADC1_6/GPIO34
ADC1_7/GPIO35
LORA_DIO2/XTAL32/TOUCH9/ADC1_4/GPIO32
LORA_DIO1/XTAL32/TOUCH8/ADC1_5/GPIO33
LED/DAC2/ADC2_8/GPIO25
LORA_DIO0/DAC1/ADC2_9/GPIO26
LORA_MOSI/TOUCH7/ADC2_7/GPIO27
LORA_RST/TOUCH6/ADC2_6/GPIO14
TOUCH5/ADC2_5/GPIO12
TOUCH4/ADC2_4/GPIO13
V_SPI_HD/SDA/VEXT_CTRL/GPIO21
ADC1_CH_0
ADC1_CH_1
ADC1_CH_2
DAC_OUTPUT
R1
470R
R2
470R
J1
Conn_I2C_1
J2
Conn_I2C_2
R3
470R
D1
LED_PWR_UP
J4
Conn_Alim
J5
Con_ADC1
J3
CONN_DAC2
Mounting Holes
MK1
M2.5
MK2
M2.5
MK3
M2.5
MK4
M2.5
ID_SD and ID_SC PINS:
These pins are reserved for HAT ID EEPROM.
At boot time this I2C interface will be interrogated to look for an EEPROM that identifies the attached board and allows automagic setup of the GPIOs (and optionally, Linux drivers).
DO NOT USE these pins for anything other than attaching an I2C ID EEPROM. Leave unconnected if ID EEPROM not required.
phfbertoleti
Sheet: /
File: rasp_heltec_lora_hat.sch
Title: Sheild/hat Rasp LoRaWAN+
Size: A4
Date: 2021-09-07
Rev: 2.0
KiCad E.D.A. kicad 5.1.5+dfsg1-2build2
Id: 1/1