VOLVO

Service Manual

Fault tracing

Repairs

Maintenance

TP 3904202

Section 3 (39)

Wiring Diagrams

940 1994

Volvo Car Corporation

Cars with SRS

Warning
Cars equipped with a Supplemental Restraint System (SRS) must be treated extra carefully when repairs are being made. This is to help prevent:1. Injuries when carrying out a repair. 2. Damage or malfunction of the SRS system.Repair to either the SRS itself or a related system or component must be carried out by an authorized Volvo workshop. Refer to the appropriate SRS service manual for complete system information.

Is the car equipped with SRS?

Cars with SRS are most easily recognized by the SRS letters on the steering wheel pad. If the car is also equipped with an air bag on the passenger side, the letters 'SRS' will be embossed on the instrument panel above the glove compartment. Most cars with SRS are also equipped with pyrotechnical seat belt tensioners in the B-posts.

Dashboard or around steering column

Take care to avoid electric wiring being pinched, frayed or pierced by screws when working on firewall, knee bolster, ignition switch, steering column casings, glove compartment, instrument panel, door sills and B-posts.

Driver's seat, centre console or carpeting at left front seat

The SRS collision sensor is located under the left front seat. Do not disconnect the collision sensor connector. Never install accessories on or near the sensor. The crash sensor connector on 1992 and earlier models must **never** be disconnected.

Repairs to steering gear and column

When carrying out repairs to the steering wheel, steering gear or column always follow the repair procedures given in the appropriate SRS service manual. The contact reel in the steering column will be damaged if the steering wheel is turned more than three turns in either direction.

Test terminal

- 1992 : An unused terminal in the fusebox is used as a hook-up for SRS diagnostics. Do not install a fuse or connect an accessory to this terminal.

1993 - : Diagnostic unit B in the engine compartment is used for fault-tracing purposes.

Modifications to September 1993 included

Modifications introduced after the above date are not covered in this manual.
See Service Bulletins as applicable.

Volvos are sold in versions adapted for different markets. These adaptations depend on many factors including legal, taxation and market requirements. This manual may therefore show illustrations and text which do not apply to cars in your country.
Volvo owners planning to export their car(s) to another country should investigate the applicable safety and exhaust emission requirements. In some cases it may be impossible to comply with these requirements.

© Volvo Car Corporation

Contents

How to use the wiring diagrams 2
Electrical distribution unit, fuses 4
Fuses 5
Ignition lock and relay location in engine compartment 6
Relay location, electrical dist. unit 7
Wiring harnesses 8
Connectors 9
Ground connections 20

Group 23
LH-jetronic 2.4 multiport fuel injection system (MFI)
(B 200 F/G, B 230 F/FB/FD/G) 22
LH-jetronic 2.4 multiport fuel injection system (MFI)
(B 200 FT, B 230 FT/GT) 24
Regina multiport fuel injection system (MFI) (B 230 F) 26

Group 26
Engine cooling fan 28

Group 27
Cruise control 30
Cruise control, function (schematic presentation) 32

Group 28
EZ 116 K Distributor ignition (DI) system
(B 200 F/G, B 230 F/FB/FD/G) 34
EZ 116 K Distributor ignition (DI) system (B 200 FT, B 230 FT/GT) 36
REX-1 Distributor ignition (DI) system (B 230 F) 38

Group 32
Power supply 40

Group 33
Starter system 42
Diesel preheating, overload protector and EGR (D 24 TIC) 44

Group 35
High and low beam 46
High and low beam, Nordic region, Netherlands, Belgium 48
High and low beam, Great Britain 50
Reduced intensity low beam (DIM-DIP) Great Britain 52
High and low beam, USA 54
High and low beam, Canada 56
Beam width control 58
Parking lights, tail lights and number plate lights 60
Parking lights, tail lights and number plate lights USA, Canada 62
Brake lights 64
Brake lights, USA, Canada 66
Backup (reversing) lights 68
Glove compartment and vanity mirror lighting 70
Interior lighting 72
Trunk light 74
Instrument and control panel lights 76
Foglights 78
Foglights, Japan, Saudi Arabia, Taiwan and Overseas 80
Foglights, USA, Canada 82
Rear foglights, USA, Canada 84

Group 36
Turn signals and hazard warning flashers 86
Horn 88
Headlight wash/wipe 90
Windshield wash/wipe 92
Tailgate wash/wipe 94
Cigar lighter 96

Group 37
On-board diagnosis (OBD) 98
Pre-routed wiring for anti-theft alarm 100
Pre-routed wiring for towing hook 102

Group 38
Bulb malfunction indicator 104
Bulb malfunction indicator for cars with extra brake light 106
Bulb malfunction indicator with brake monitor 108
Seat belt reminder 110
Seat belt reminder with ignition key warning, USA, Canada, Korea 112
Combined instrument 114
Speedometer and tripmeter 116
Ambient temperature gauge 118

Group 39
Radio connections, 4-door 120
Radio connections, 5-door 122
Radio connections, 4-door (Radio with integrated amplifier) 124
Radio connections, 5-door (Radio with integrated amplifier) 126

Group 43
M 46 Overdrive 128
AW 70/70/72 Overdrive with kickdown inhibitor AW 71/72 130
P-shift lock, automatic transmission 132

Group 59
ABS Brake system 134

Group 83
Power window lifts 136
Central locking 138
Power sunroof 140

Group 84
Heated rear window 142
Heated rear window and door mirrors with timer relay 144
Power door mirrors 146

Group 85
Heated driver's/passenger's seat, normal output 148
Heated driver's/passenger's seat, high output 150
Power seat 152
Power seat with memory 154

Group 87
Cabin fan, standard heater 156
Manual Climate Control (MCC) 158
Electronic Climate Control (ECC) 160
Exhaust temperature sensor (Japan) 162

Group 88
SRS Supplemental Restraint System (airbag) 164
SRS Supplemental Restraint System (airbag) USA, Canada 166

Feedback 168
List of components (foldout) ..... at the end of the book
Alphabetical index ..... at end of book

Order no. TP 3904032 (UK)	**Order no. TP 3904202 (USA/CDN)**
Supersedes TP 3904031	Supersedes TP 3904201

We reserve the right to make alterations to specification

How to use the wiring diagrams

Look up the relevant electrical function in the index.
Let us say you want to look at the central locking system.
According to the index, the central locking system is found on page 138.

Here is a schematic presentation of how the components are connected to each other and their internal appearance.

Each component has a component designation. At the end of the manual there is a component list where you can see what each component is called.

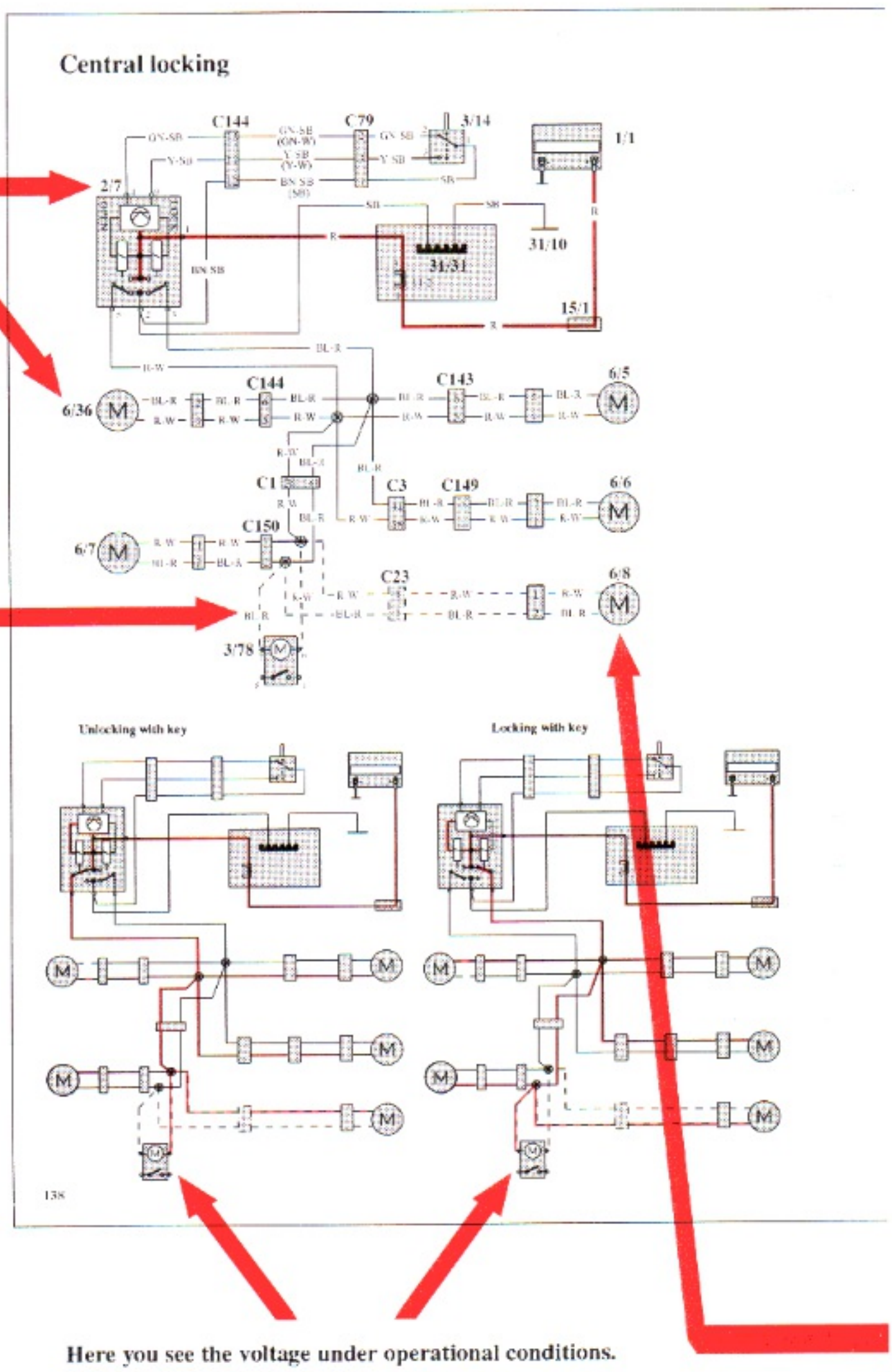

Wire colours are indicated with letters of the alphabet:

SB = Black	BN = Brown	GN = Green
GR = Grey	Y = Yellow	OR = Orange
W = White	P = Pink	VO = Purple
R = Red	BL = Blue	

BL-R is thus = Blue-red.

Code to colours in the wiring diagram

= no voltage

= system voltage

= voltage lower than system voltage

= ground connection

= screened wire

= branching point

= intertwined wires

Here you see the voltage under operational conditions.

How to use the wiring diagrams

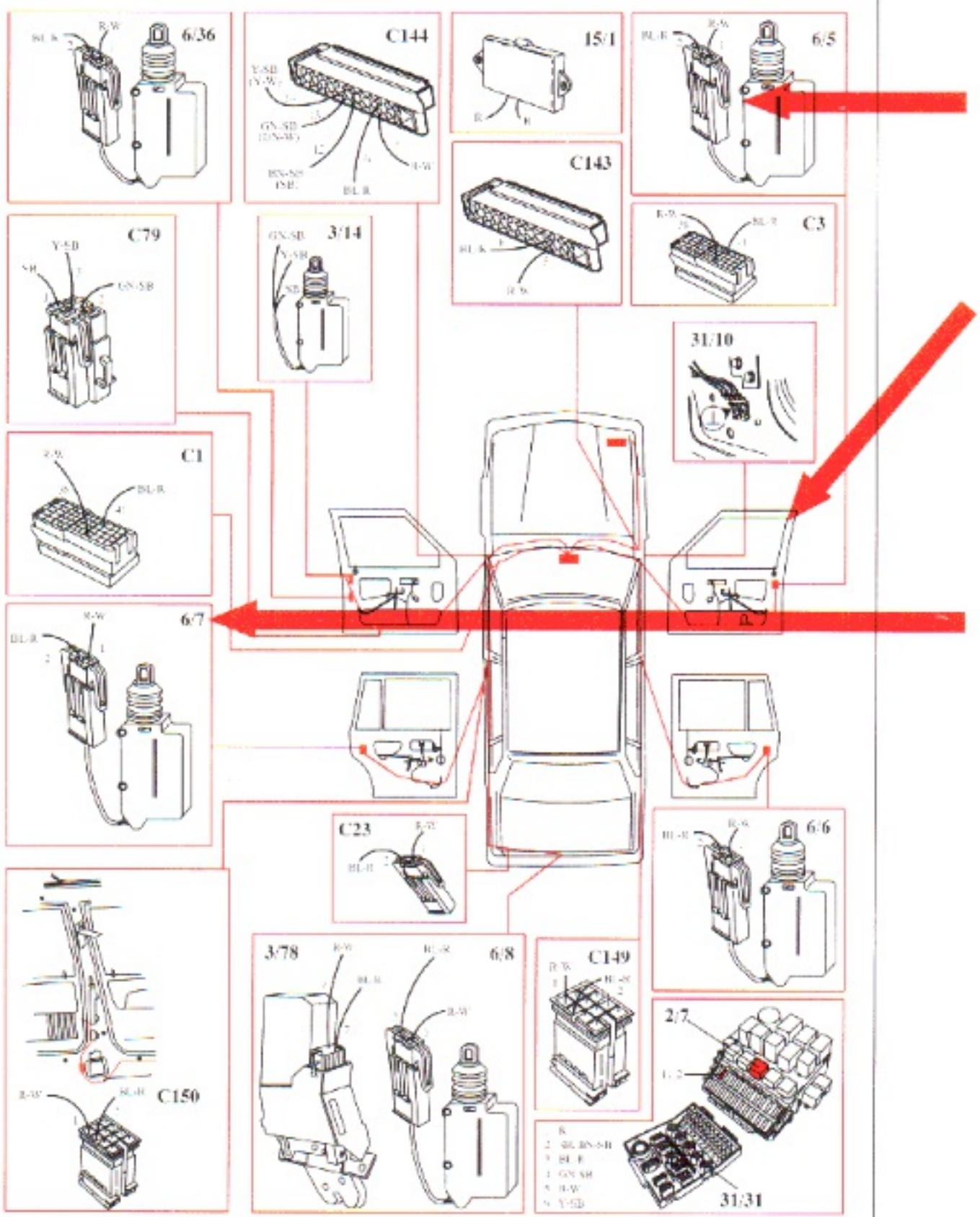

Here you can see how the various wires are connected to each component.

You can also see where in the car the relevant components are located and how the wires are routed.

The component designation consists of a type number and a component number, except for the connectors which feature the letters C or D and a number.

The type number (in this case 6) indicates what type of component it is, eg switch, electric motor or sensor, see the list below. The component number (7) indicates which specific component we are dealing with, eg light switch, central lock motor driver's side rear or knock sensor (KS).

List of type numbers

1	Battery
2	Relay
3	Switch
4	Control module
5	Combined instrument
6	Electric motor
7	Sensor
8	Actuator
9	Heater element
10	Lamp
11	Fuse
15	Distribution rail, current supply
16	Audio
17	Service socket
18	Bridge connector
19	Gauge
20	Ignition component
31	Ground connection

Use of the component ID makes it easy to switch from the component diagrams to the electrical wiring diagram itself.

Electrical distribution unit, fuses

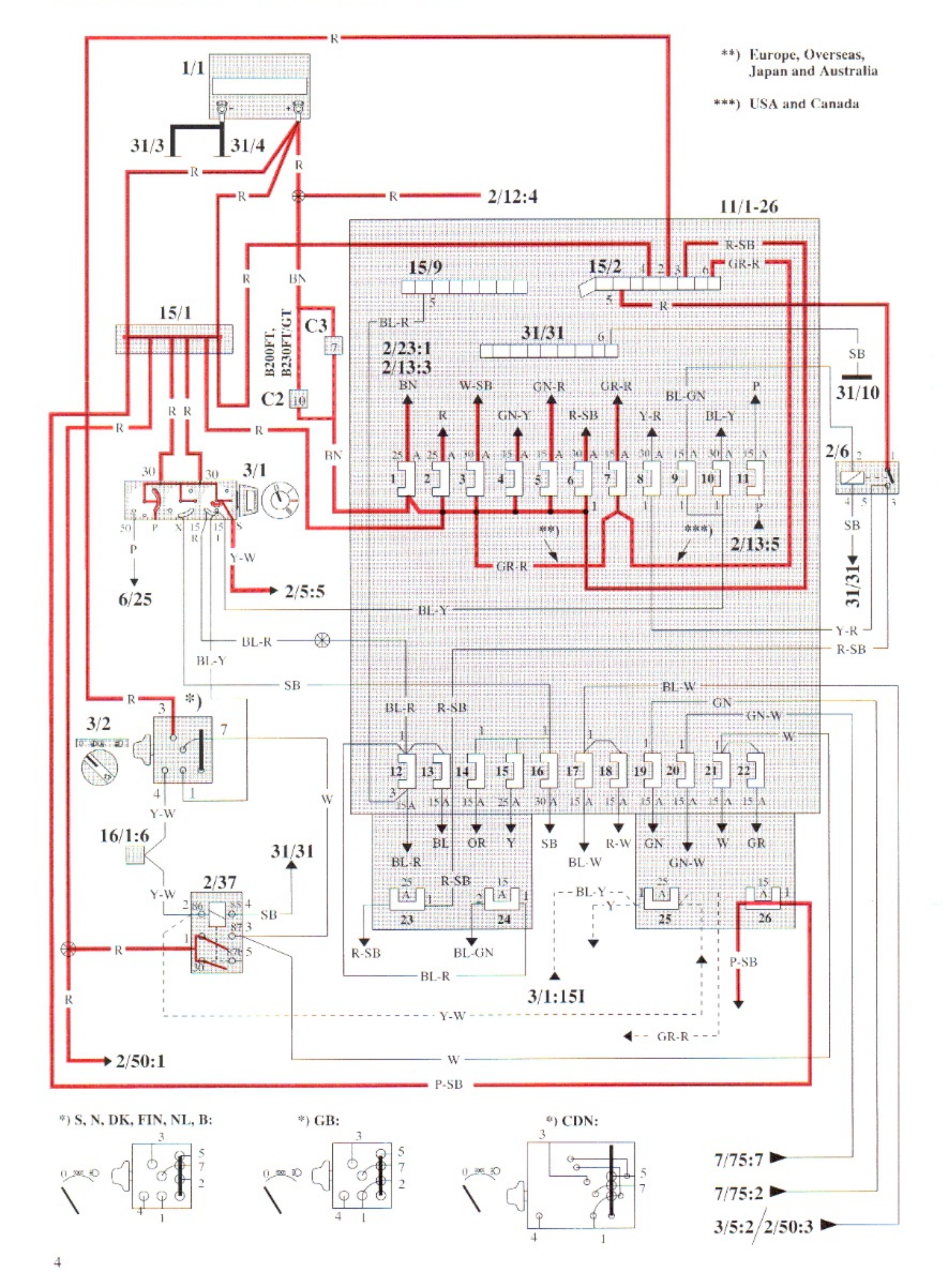

Fuse no.	Function
1	Fuel pump (LH-2.4 MFI)
	Fuel system
	Distributor Ignition (DI) system
	Oxygen sensor (HO2S) heating (B200/230FT)
2	Hazard warning flashers
	Headlight flasher (via fuse 17 and 18)
	Central locking
	Anti-theft alarm
3	Power seats
	(Towing hook)
4	Brake lights
	Solenoid, P-shift lock
5	Clock
	Vanity mirror light
	Glove compartment lighting
	Trunk light
	Interior lighting
	Radio
	Power antenna
	Door-open warning lights
	CD-autochanger
	Anti-theft alarm
6	Electronic Climate Control (ECC)
	Cabin fan, Electronic Climate Control (ECC)
7	Front foglights
	Rear foglights (not USA, Canada)
8	Power windows
9	Turn signals
	Warning lights for seat belts
	Seat belt reminder
	Ignition key warning
	Bypass relay 151 (power windows/seat heating)
	Solenoid, P-shift lock
	(Towing hook)
10	Heated rear window
	Power sunroof
	Heated door mirrors
11	Fuel primer pump in fuel tank (LH-2.4 MFI)
	Fuel pump in tank (Regina MFI)
	Oxygen sensor (HO2S) heating
12	Backup (reversing) lights
	Overdrive relay
	Bulb malfunction indicator with brake monitor
	Exhaust temperature sensor (Japan)
	Cruise control
	Anti-theft alarm

Fuse no.	Functions
13	Fuel valve, diesel
	Pre-heating mechanism, diesel
	EGR diesel
	Solenoid, pulsed secondary air injection (PAIR) (B230FD)
14	Power door mirrors
	Cigar lighter
	Radio
	Tailgate washer
	Tailgate wiper
	Ambient temperature sensor
15	Relays, power seats
	Horn
	Windshield wash/wipe
	Headlight wash/wipe
16	Cabin fan, standard heater
	Cabin fan, Manual Climate Control (MCC)
	Electronic Climate Control (ECC)
17	Left high beam
	Indicator light, high beam
18	Right high beam
	Front fog lights (Japan, Taiwan and Saudi Arabia)
19	Left low beam
	Beam width control
	Relay, front foglights (USA/CDN)
20	Right low beam
	Beam width control
21	Left parking lights, front and rear
	Number plate lights
	Instrument and control panel lights
	Ambient temperature sensor
22	Relay, front foglights (Europe)
	Right parking lights, front and rear
	Ashtray light, rear
	Automatic transmission selector illumination
	Lighting, switches and storage compartment in centre console
23	Heated front seats
24	ABS
25	Rear foglights (USA, Canada, Japan)
	Disconnectable low beam (Nordic market, Netherlands, Belgium)
26	Amplifier, radio

Ignition lock and relay location in engine bay

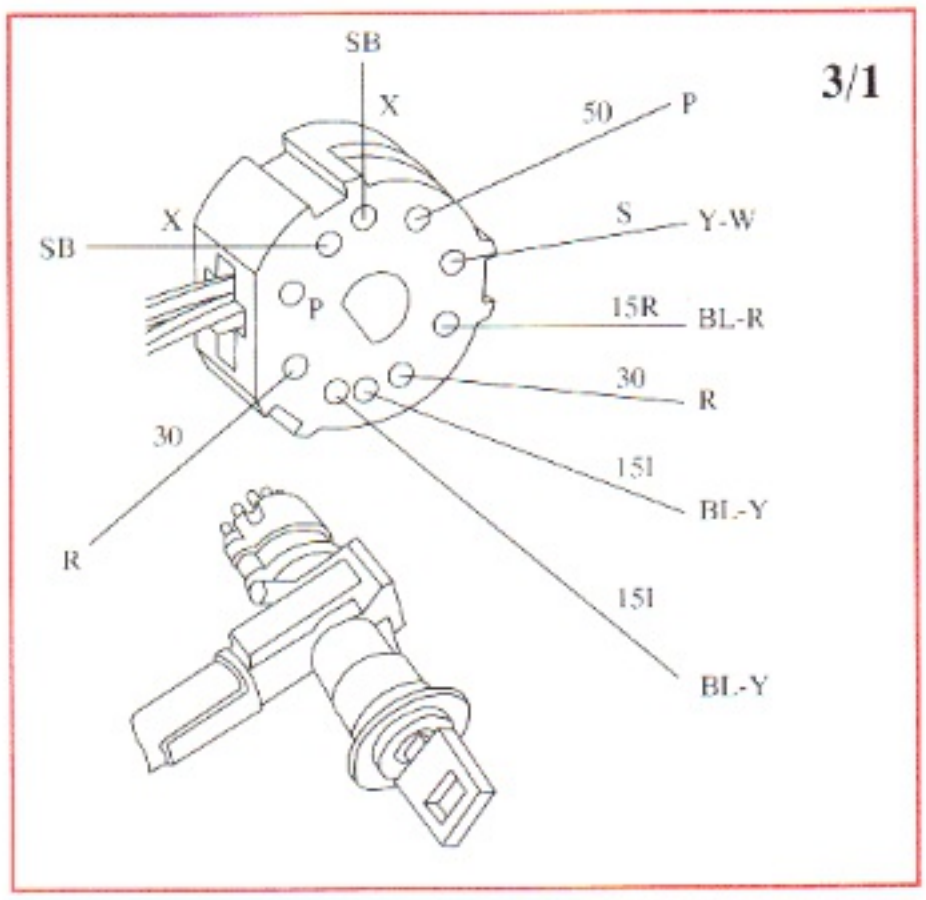

Ignition lock

Inputs
30: two leads from battery

Outputs

Key position:		Voltage at connection:
-	Key withdrawn	P
0	Off	S,P
I	Radio	X,S,P
II	Drive	X,15R,15I,S
III	Start	15R,50,S

Relay location in engine compartment

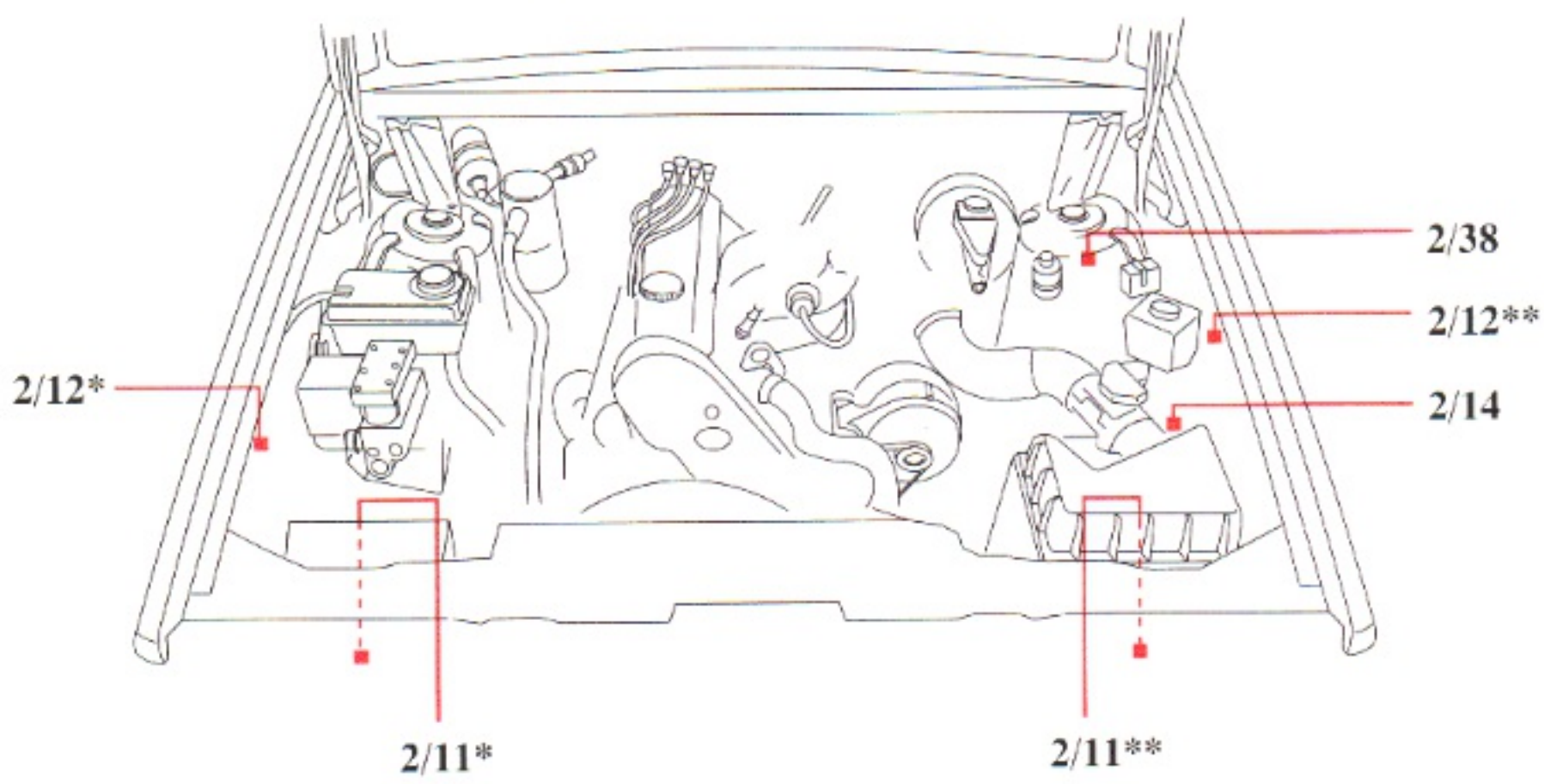

2/11*	Relay, engine cooling fan (B 200 F/G, B 230 F/FB/FD/G)
2/11**	Relay, engine cooling fan (B 200 FT, B 230 FT/GT)
2/12*	Relay, interference suppression (B 200 F/G, B 230 F/FB/FD/G)
2/12**	Relay, interference suppression (B 200 FT, B 230 FT/GT)
2/14	Relay, glow plug (D 24 TIC)
2/38	Timer relay, exhaust feedback EGR (D 24 TIC)

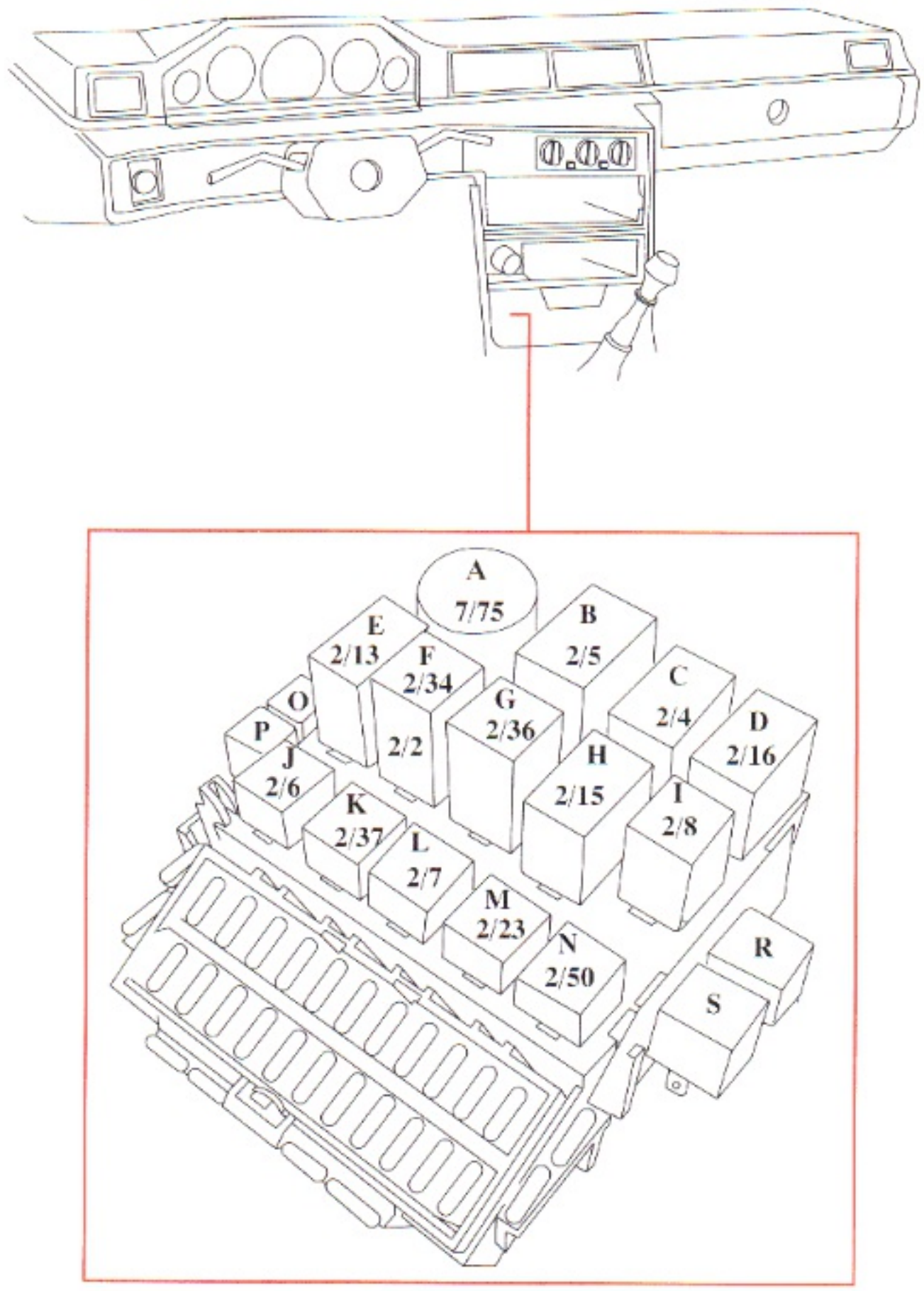

Relays in electrical distribution unit

A Bulb failure warning sensor (7/75)
B Seat belt reminder/key warning (2/5) (USA, Canada, Korea)
C Windshield wiper intermittent relay (2/4)
D Tailgate wiper intermittent relay (2/16)
E Fuel injection (2/13)
F Foglights, front (2/34 or 2/2 USA, Canada)
G Headlight flasher (2/36)
H Exhaust temp. sensor (2/15) (Japan)
I Overdrive (2/8)
J Overload relay 15I (2/6) (power windows/seat heater)
K Headlight (2/37)
L Central lock (2/7)
M Fuel pump relay (2/23)
N Overload relay high beam (2/50) (not USA, Canada)
O -
P -
R -
S -

Wiring harnesses

Cable routing

The routing of the main cables is shown in the illustration.

1 Front lights
2 Battery
3 Generator
4 Starter motor
5 Combined instrument
6 Electrical distribution unit
7 Power door mirrors
8 Power windows
9 Central locking
10 Control modules, power seats
11 Motor, power sunroof
12 Ashtray lighting
13 Interior lighting
14 Loudspeakers, instrument panel
15 Loudspeakers, rear parcel shelf
16 Fuel gauge
17 Power antenna
18 Trunk lighting
19 ABS hydraulic unit
20 Tail lights
21 Number plate lighting
22 Heated rear window
23 Extra brake light
24 Engine cooling fan
25 Pre-routed wiring for towing hook

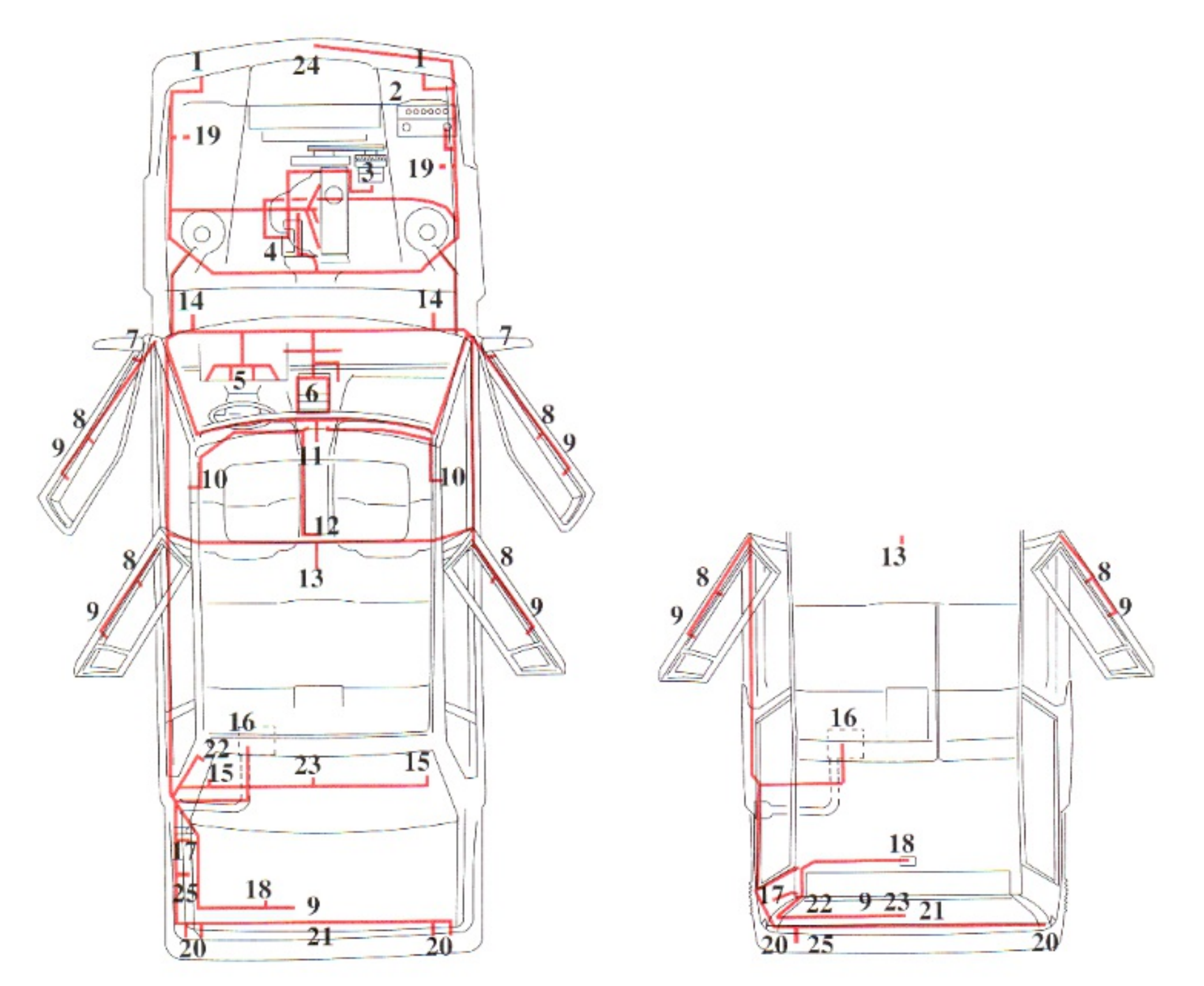

Connector at left A-post (bottom rail harness)

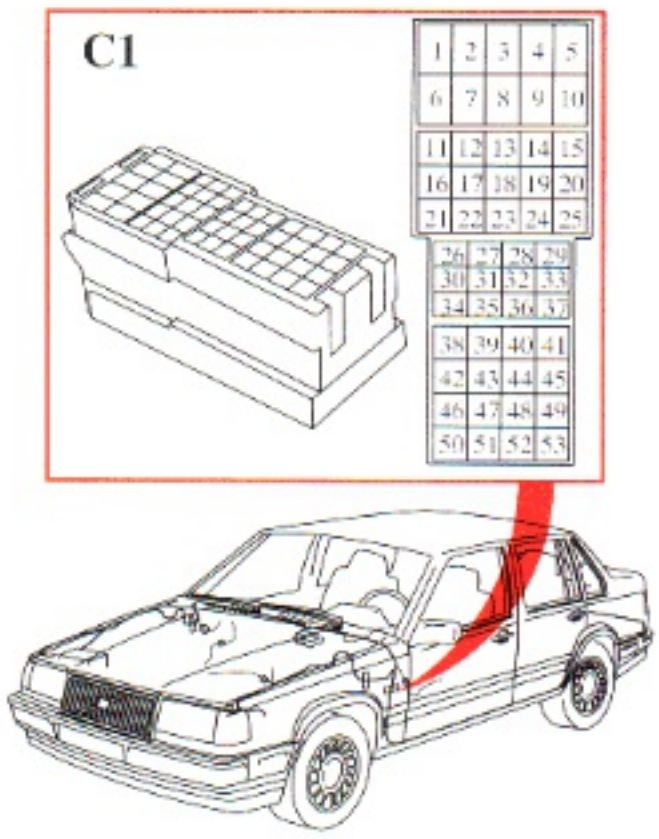

White connector **C1** (53-pin)
Instrument panel harness - sill harness

	all models	
1	Tail lights	(BN-W)
2	Tail lights	(R)
3	Brake light, left	(Y-R)
4	Brake light, right	(Y)
5	Backup (reversing) lights	(SB)
6	Number plate lights	(W)
7	Turn signal, left rear	(GN)
8	Turn signal, right rear	(BL-GN)
9	Fuel level sensor/primer pump (pump)	(GR-W)
10	Heated rear window	(Y)
11	Sensor, speedometer -	(BN-W)
12	Sensor, speedometer +	(GN-W)
13	Door switch, pre-routed interior lighting	(W-SB)
14	Towing hook pos. 10	(BL-GN)
15	Rear foglights	(GR)
16	Fuel level sensor/primer pump (pump)	(BN)
17	Fuel level sensor/primer pump (pump)	(P)
18	Extra brake light	(Y-SB)
19	Tailgate wiper	(OR)
20	Tailgate wiper	(Y-W)
21	Power antenna pos. 3	(GN-GR)
22	-	
23	-	
24	Ground connector, left A-post	(BN-GR)
25	Towing hook pos. 9	(W-SB)
26	Towing hook pos. 7	(W)
27	Towing hook pos. 5	(GR)
28	Towing hook pos. 6	(Y-BN)
29	Door-open warning light, left rear Interior lighting Trunk light Power antenna pos. 1	(GN-R)
30	Interior lighting	(BN-SB)
31	Connector, tailgate/trunk (anti-theft alarm)	(BN-OR)
32	-	
33	Loudspeaker rear parcel shelf right side +	(GN-BN)
34	Loudspeaker rear parcel shelf right side -	(GN)
35	Loudspeaker left rear door + Loudspeaker rear parcel shelf left side +	(Y-W)
36	Loudspeaker left rear door - Loudspeaker rear parcel shelf left side -	(W)
37	-	
38	Central locking, rear door Central locking, tailgate/trunk	(R-W)
39	-	
40	-	
41	Central locking rear door Central locking, tailgate/trunk	(BL-R)
42	-	
43	-	
44	-	
45	-	
46	-	
47	-	
48	-	
49	-	
50	Power window lift motor, rear door	(GN)
51	Power window lift motor, rear door	(GR)
52	-	
53	Power window lift motor, rear door ON/OFF	(P)

Connector at left A-post (wheel housing harness)

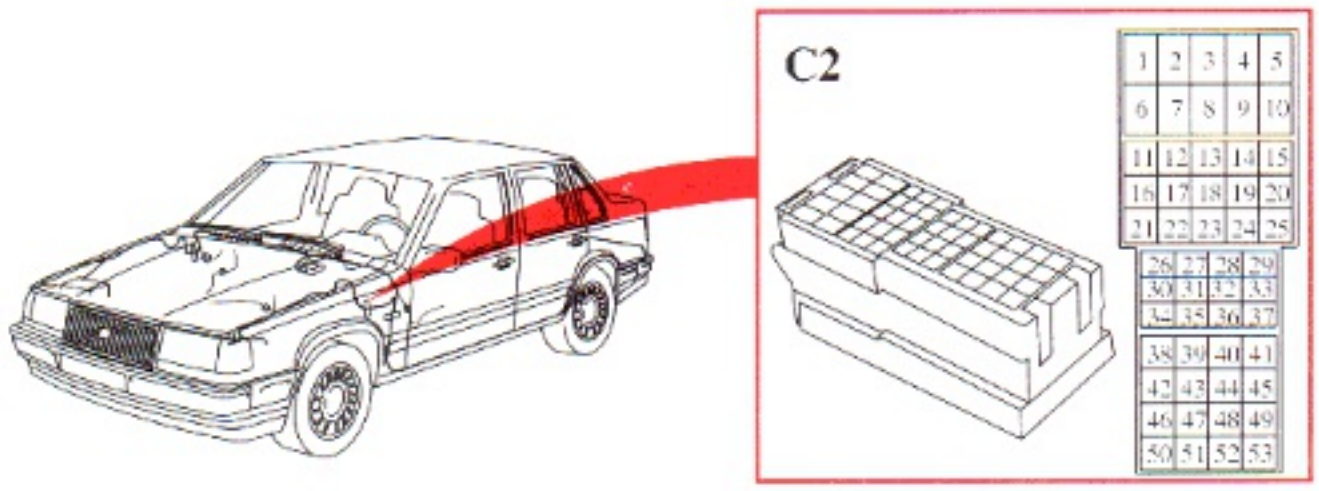

Black connector **C2** (53-pin)
Instrument panel harness - left wheel housing harness

	B 230 F REX-I	
1	Starter motor 50	(BL-GN)
2	High beam left	(BL-W)
3	Low beam left	(GN)
4	Horn + Windshield wiper motor pos. 1 Headlight wiper motor (not USA/CDN)	(Y)
5	Windshield wiper motor pos. 2	(GR)
6	Windshield wiper motor pos. 3	(GN-W)
7	Windshield wiper motor pos. 4	(OR)
8	Front foglights	(W-SB)
9	Control module REX-I (DI) pos. 5	(BN)
10	-	
11	On-board diagnostic (OBD) socket B pos. 5	(GR-OR)
12	On-board diagnostic (OBD) socket A pos. 3	(BL-P)
13	Turn signal, left	(GN)
14	Parking light, left	(W)
15	-	
16	Oil pressure sensor	(SB)
17	Horn -	(BL-SB)
18	Headlight wiper motor (not USA/CDN) Windshield washer motor	(BL-R)
19	Brake fluid level sensor	(VO)
20	Engine coolant temperature (ECT) sensor pos. 1	(Y-W)
21	Engine coolant temperature (ECT) sensor pos. 2	(Y-SB)
22	Generator D+	(R)
23	On-board diagnostic (OBD) socket B pos. 6	(BL-W)
24	Service socket	(P)
25	On-board diagnostic (OBD) socket A pos. 2	(GN-W)
26	Control module REX-I (DI) pos. 3	(BN-W)
27	Power amplifier/ignition coil REX-I (DI) pos. C	(R-W)
28	On-board diagnostic (OBD) socket A pos. 4 Control module REX-I (DI) pos. 6 Power amplifier/ignition coil REX-I (DI) pos. A	(BL)
29	Control module REX-I (DI) pos. 17	(Y-GR)
30	-	
31	-	
32	Washer fluid level sensor	(R-SB)
33	Washer motor, tailgate	(BL-Y)
34	Door switch	(BN-SB)
35	Door switch	(W-SB)
36	-	
37	-	
38	Ambient temperature sensor	(GN-Y)
39	Ambient temperature sensor	(GN-R)
40	Anti-theft alarm, connector D4 pos. 1	(GR-W)
41	Anti-theft alarm, connector D4 pos. 2	(BN-P)
42	Control module cruise control pos. 10	(BN-GR)
43	Control module cruise control pos. 2	(P-SB)
44	Control module cruise control pos. 7	(BN-OR)
45	Control module cruise control pos. 11	(BL-OR)
46	Control module cruise control pos. 6	(BL-GR)
47	Control module cruise control pos. 4	(OR-W)
48	Control module cruise control pos. 3	(OR-SB)
49	Control module cruise control pos. 13	(GN-OR)
50	-	
51	-	
52	-	
53	-	

Connector at left A-post (wheel housing harness)

Black connector **C2** (53-pin)
Instrument panel - left wheel housing

	B200F/FT,B230F/FB/FD/G/FT/GT-EZK (DI)		D24/D24TIC	
1	Starter motor 50	(BL-GN)	Starter motor 50 Relay, glowplug mechanism pos. 3	(BL-GN)
2	High beam, left	(BL-W)	High beam, left	(BL-W)
3	Low beam, left Beam width control (Germany)	(GN) (GN-BN)	Low beam, left Beam width control (Germany)	(GN) (GN-BN)
4	Horn + Windshield wiper motor pos. 1 Headlight wiper motor (not USA/CDN)	(Y)	Horn + Windshield wiper motor pos. 1 Headlight wiper motor	(Y)
5	Windshield wiper motor pos. 2	(GR)	Windshield wiper motor pos. 2	(GR)
6	Windshield wiper motor pos. 3	(GN-W)	Windshield wiper motor pos. 3	(GN-W)
7	Windshield wiper motor pos. 4	(OR)	Windshield wiper motor pos. 4	(OR)
8	Front foglights	(W-SB)	Front foglights	(W-SB)
9	Control module EZK (DI) pos. 5 (not FT/GT)	(BL) (BN)	Relay, glowplug mechanism pos. 4 Pos. 3, connector C51 at left suspension tower	(BL)
10	B200FT, B230FT/GT: Battery + Relay, radio interference suppression pos. 4	(BN)	-	
11	On-board diagnostic (OBD) socket B pos. 5	(GR-OR)	On-board diagnostic (OBD) socket B pos. 5	(GR-OR)
12	On-board diagnostic (OBD) socket A pos. 3	(BL-P)	On-board diagnostic (OBD) socket A pos. 3	(BL-P)
13	Turn signal, left	(GN)	Turn signal, left	(GN)
14	Parking lights, left	(W)	Parking lights, left	(W)
15	Beam width control (Germany)	(GR)	Beam width control (Germany)	(GR)
16	Oil pressure sensor	(SB)	Oil pressure sensor	(SB)
17	Horn -	(BL-SB)	Horn -	(BL-SB)
18	Headlight wiper motor (not USA/CDN) Windshield washer motor (not FT/GT)	(BL-R)	Headlight wiper motor	(BL-R)
19	Brake fluid level sensor	(VO)	Brake fluid level sensor	(VO)
20	Engine coolant temperature (ECT) sensor pos. 1	(Y-W)	Engine coolant temperature (ECT) sensor pos. 1	(Y-W)
21	Engine coolant temperature (ECT) sensor pos. 2	(Y-SB)	Engine coolant temperature (ECT) sensor pos. 2	(Y-SB)
22	Generator D+	(R)	Generator D+	(R)
23	On-board diagnostic (OBD) socket B pos. 6	(BL-W)	On-board diagnostic (OBD) socket B pos. 6	(BL-W)
24	Service socket	(P)	Service socket	(P)
25	On-board diagnostic (OBD) socket A pos. 2	(GN-GR)(GN-W)	-	
26	Ignition Control Module (ICM) pos. 3	(BN-W)	-	
27	Power amplifier EZK (DI) pos. 1 Ignition coil 1	(R-W)	Generator W	(R-W)
28	Ignition Control Module (ICM) pos. 6 Power amplifier EZK (DI) pos. 4 On-board diagnostic (OBD) socket A pos. 4 Converter, EGR (B230FD and B230FT California)	(BL)	On-board diagnostic (OBD) socket A pos. 4	(BL)
29	Ignition Control Module (ICM) pos. 17	(Y-GR)	-	
30	-		Pressure sensor, turbodiesel (D24TIC)	(Y-R)
31	-		-	
32	B200FT, B230FT/GT: Ignition Control Module (ICM) pos. 5 Others: Washer fluid level sensor	(BN)(BN-W) (R-SB)(BL-W)	-	
33	B200FT, B230FT/GT: Relay, radio interference suppression pos. 2 Others: Wiper motor, tailgate	(BL-Y)	-	
34	Door switch	(BN-SB)	Door switch	(BN-SB)
35	Door switch	(W-SB)	Door switch	(W-SB)
36	-		-	
37	Ignition Control Module (ICM) pos. 4	(GR-R)	Relay, glowplug mechanism pos. 1	(OR)
38	Ambient temperature sensor	(GN-Y)	Ambient temperature sensor	(GN-Y)
39	Ambient temperature sensor	(GN-R)	Ambient temperature sensor	(GN-R)
40	Anti-theft alarm, connector D4 pos. 1	(GR-W)	Anti-theft alarm, connector D4 pos. 1	(GR-W)
41	Anti-theft alarm, connector D4 pos. 2	(BN-P)	Anti-theft alarm, connector D4 pos. 2	(BN-P)
42	Control module cruise control pos. 10	(BN-GR)	-	
43	Control module cruise control pos. 2	(P-SB)	-	
44	Control module cruise control pos. 7	(BN-OR)	-	
45	Control module cruise control pos. 11	(BL-OR)	-	
46	Control module cruise control pos. 6	(BL-GR)	-	
47	Control module cruise control pos. 4	(OR-W)	-	
48	Control module cruise control pos. 3	(OR-SB)	-	
49	Control module cruise control pos. 13	(GN-OR)	-	
50	B230FD: Solenoid valve, pulsed secondary air injection (PAIR)	(BL-W)	-	
51	-		-	
52	-		-	
53	-		-	

Connector at right A-post (wheel housing harness and sill harness)

Connector **C3** (pos. 1-25 in 53-pin)
Instrument panel harness - right wheel housing harness

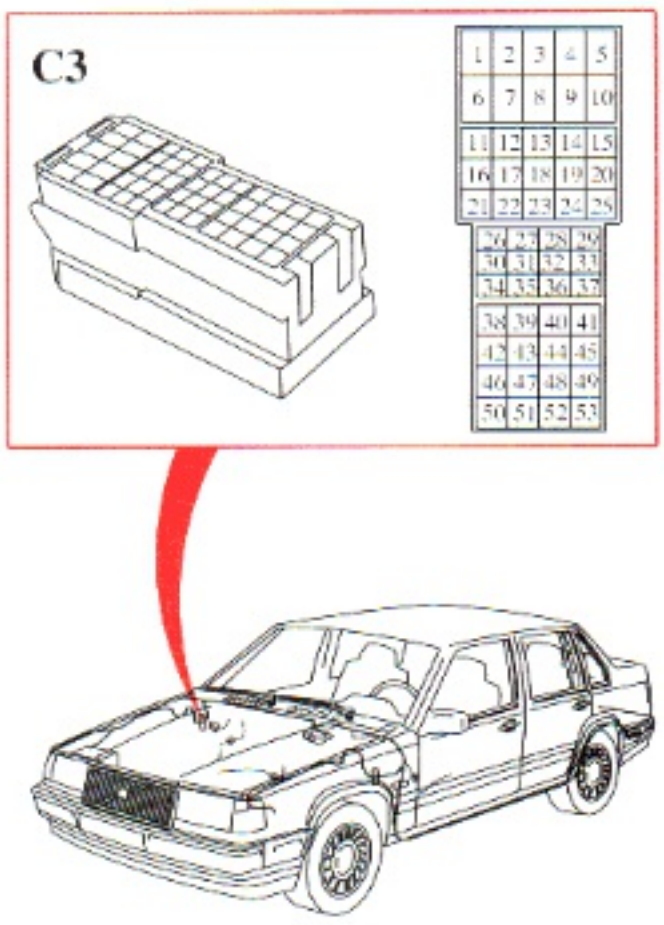

B200F/G/FT, B230F/FB/FD/G/FT/GT

1	High beam, right	(R-W)
2	Low beam, right	(GN-W)
	Beam width control (Germany)	(GN-BN)
3	Turn signal, right	(BL-GN)
4	Parking light, right	(GR)
5	B200FT, B230FT/GT: Washer motor, tailgate	(BL-Y)
	Others: LH/Regina control module (MFI) pos. 30	(P-W)
6	B200FT, B230FT/GT: LH (MFI) control module pos. 12	(GN-GR)
	Others with EZK (DI): Ignition coil 15	(BL)
7	B200FT, B230FT/GT: LH (MFI) control module pos. 30	(BN)
	Others:	
	Battery +	
	Relay, radio interference suppression pos. 2 and 4	
8	Oxygen sensor (HO2S) heating	(P)
9	LH/Regina control module (MFI) pos. 9	(BL-Y)
	Idle air control (IAC) valve pos. 1	
	Relay, radio interference suppression pos. 2 (not FT/GT)	
	Mass air flow sensor (MAF) pos. 5	
	B200FT, B230FT/GT:	
	PTC-resistor	
10	LH/Regina control module (MFI) pos. 35	(BL)
11	LH/Regina control module (MFI) pos. 22	(BN-W)
12	LH/Regina control module (MFI) pos. 4	(BN) (W)
13	Front foglights	(W-SB)
14	LH/Regina control module (MFI) pos. 20	(Y-SB)
15	Headlight wiper motor (not USA/CDN)	(Y)
	LH/Regina control module (MFI) pos. 26 (USA/CDN)	(W-SB)
16	Beam width control (Germany)	(GR)
17	Headlight wiper motor (not USA, CDN)	(BL-R)
	B230FT USA, CDN:	
	Washer motor	
	B200FT, B230FT/GT EU/OS:	
	Headlight wiper motor	
	Washer motor	
18	LH/Regina control module (MFI) pos. 1	(Y-GR)
19	LH control module (MFI) pos. 28	(GR-R)
20	-	
21	LH control module (MFI) pos. 15	(GN-Y)
22	LH/Regina control module (MFI) pos. 21	(R)
23	-	
24	B200FT, B230FT/GT:	
	Washer fluid level sensor	(BL-W)
	Others:	
	LH/Regina control module (MFI) pos. 12	(GN-W)
25	LH/Regina control module (MFI) pos. 34	(VO-W)

Connector **C3** (pos. 26-53 in 53-pin)
Instrument panel harness - sill harness

26	-	
27	-	
28	-	
29	Door-open warning light, right rear	(GN-R)
30	Door switch, front and rear doors	(W-SB) (BN-SB) (BL-SB)
31	Door switch, front door	(W-SB)
32	Side turn signal repeaters	(BL-GN)
33	-	
34	-	
35	Loudspeaker, right rear door +	(Y-W)
36	Loudspeaker, right rear door -	(W)
37	-	
38	Central locking, rear door	(R-W)
39	-	
40	-	
41	Central locking, rear door	(BL-R)
42	-	
43	-	
44	-	
45	-	
46	-	
47	-	
48	-	
49	-	
50	Power window lift motor, rear door	(GN)
51	Power window lift motor, rear door	(GR)
52	-	
53	Power window lift motor, rear door ON/OFF	(P)

Connector at right A-post (wheel housing harness and door sill harness)

Connector **C3** (pos. 1-25 in 53-pin)
Instrument panel harness - right wheel housing harness

D24/D24TIC

1	High beam, right	(R-W)
2	Low beam, right Beam width control (Germany)	(GN-W) (GN-BN)
3	Turn signal, right	(BL-GN)
4	Parking light, right	(GR)
5	Washer motor, tailgate	(BL-Y)
6	-	
7	-	
8	-	
9	-	
10	-	
11	-	
12	-	
13	Front foglights	(W-SB)
14	-	
15	Headlight wiper motor	(Y)
16	Beam width control (Germany)	(GR)
17	Headlight wiper motor Washer motor	(BL-R)
18	-	
19	-	
20	-	
21	-	
22	-	
23	-	
24	Washer fluid level sensor	(BL-W)
25	-	

Connector **C3** (pos. 26-53 in 53-pin)
Instrument panel harness - door sill harness

26	-	
27	-	
28	-	
29	Door-open warning light, right rear	(GN-R)
30	Door switch, front and rear doors	(BL-SB)
31	Door switch, front door	(W-SB)
32	Side turn signal repeater	(BL-GN)
33	-	
34	-	
35	Loudspeaker, right rear door +	(Y-W)
36	Loudspeaker, right rear door -	(W)
37	-	
38	Central locking, rear door	(R-W)
39	-	
40	-	
41	Central locking, rear door	(BL-R)
42	-	
43	-	
44	-	
45	-	
46	-	
47	-	
48	-	
49	-	
50	Power window lift motor, rear door	(GN)
51	Power window lift motor, rear door	(GR)
52	-	
53	Power window lift motor, rear door ON/OFF	(P)

Connector in engine compartment at left suspension tower

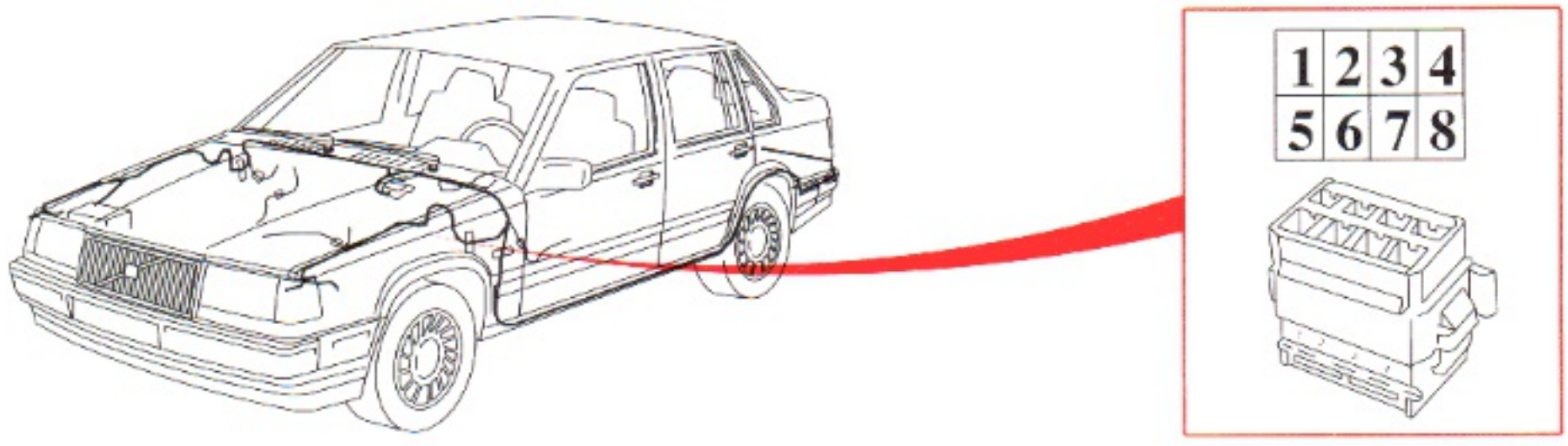

B200F/G, B230F/FB/FD/G-EZK		B200FT, B230FT/GT	
Connector **C50** (8-pin)		Connector **C50** (8-pin)	
1	-	Injector 1	(GN)
2	Pos. 1, connector C137 at right suspension tower (4-pin)	(BL-GN)	Injector 2	(GN)
3	Pos. 2, connector C137 at right suspension tower (4-pin)	(BL-R)	Injector 3	(GN)
4	Pos. 3, connector C137 at right suspension tower (4-pin)	(BL-W)	Injector 4	(GN)
5	Pos. 4, connector C137 at right suspension tower (4-pin)	(BL-Y)	-	
6	Pos. 3, connector C55 at right suspension tower (4-pin)	(Y-W)	-	
7	Control module LH (MFI) pos. 25 via pos. 2, connector C55 at right suspension tower	(Y)	Control module LH (MFI) pos. 25 via pos. 2, connector C55 at right suspension tower	(Y)
8	-		-	

Connector **C51** (8-pin)			Connector **C51** (8-pin)	
1	Engine coolant temperature (ECT) sensor pos. 1	(Y-W)	Engine coolant temperature (ECT) sensor pos. 1	(Y-W)
2	Oil pressure sensor	(SB)	Oil pressure sensor	(SB)
3	Ground, control module EZK pos. 20	(BN) (BN-SB)	Ground, ICM pos. 20	(BN)
4	Generator D+	(R)	Generator D+	(R)
5	Starter motor 50	(BL-GN)	Starter motor 50	(BL-GN)
6	Throttle position (TP) switch pos. 1 Pos. 8, connector C54 at right suspension tower	(OR)	Throttle position (TP) switch pos. 1 Pos. 8, connector C54 at right suspension tower	(OR)
7	Engine coolant temperature (ECT) sensor fuel/ignition (MFI/DI) pos. 2	(R-SB)	Engine coolant temperature (ECT) sensor fuel/ignition (MFI/DI) system pos. 2	(R-SB)
8	Engine coolant temperature (ECT) sensor pos. 2	(Y-SB)	Engine coolant temperature (ECT) sensor pos. 2	(Y-SB)

Connector **C132** (8-pin)			Connector **C132** (8-pin)	
1	Ignition coil 1	(R-W)	Ignition coil 1	(R-W)
2	All: Ground, power amplifier EZK (DI) B230FD and B230FT California: Ground, control module EZK (DI) pos. 14	(SB)	All: Ground, power amplifier EZK (DI) California: Ground, ICM pos. 14	(SB)
3	B230FD and B230FT California:		Temperature sensor EGR pos. 1 (California)	(Y-SB)
4	Temp. sensor, EGR pos. 1	(Y-SB)	-	
5	Mass air flow (MAF) sensor pos. 1	(BN)	Ignition coil 15	(BL)
6	Knock sensor (KS) pos. 1	(GN)	Knock sensor (KS) pos. 1	(GN)
7	Knock sensor (KS) pos. 2	(SB)	Knock sensor (KS) pos. 2	(SB)
8	Control module LH (MFI) pos. 31 via pos. 4, connector C55 at right suspension tower (B230FD)	(Y-R)	-	

Connectors in engine compartment at left suspension tower

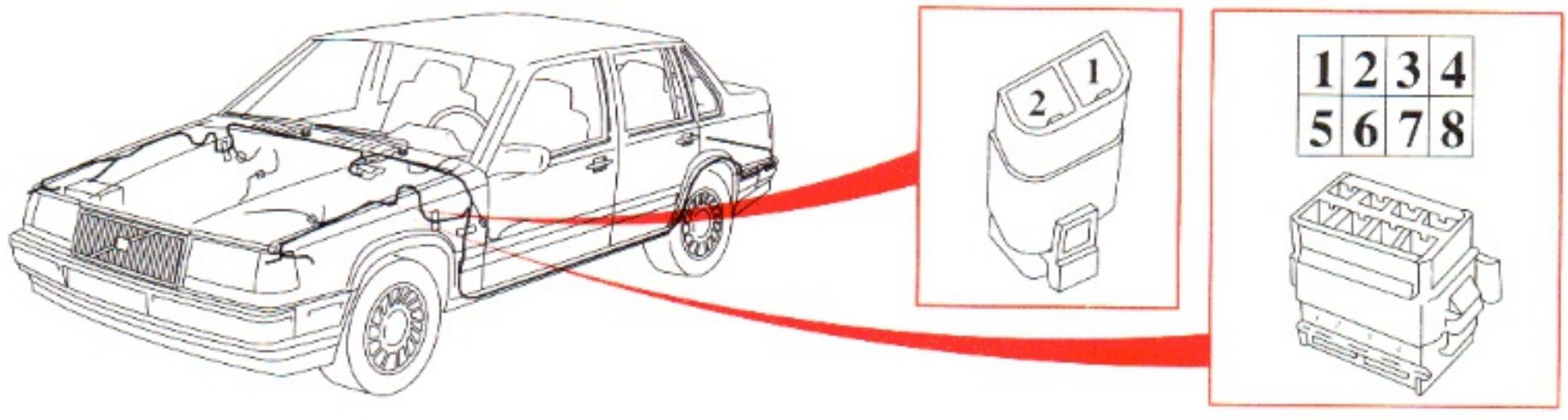

B 230 F, REX-I **D24/D24TIC**

Connector **C50** (8-pin)

1	Pos. 2, connector C137 at right suspension tower (4-pin)	(BL-R)
2	Ground, control module REX-I (DI), pos. 20 Ground, power amplifier/ignition coil REX-I (DI), pos. A	(BN)
3	Pos. 3, connector C137 at right suspension tower (4-pin)	(BL-SB)
4	Pos. 4, connector C137 at right suspension tower (4-pin)	(GN)
5	Control module Regina (MFI) pos. 25, via pos. 2, connector C55 at right suspension tower	(Y)
6	Knock sensor (KS) pos. 1	(GN)
7	Knock sensor (KS) pos. 2	(SB)
8	Pos. 1, connector C137 at right suspension tower (4-pin)	(BN-SB)

Connector **C51** (8-pin)

1	Engine coolant temperature (ECT) sensor pos. 1	(Y-W)
2	Oil pressure sensor	(SB)
3	Ground, power amplifier/ignition coil REX-I pos. B	(SB)
4	Generator D+	(R)
5	Starter motor 50	(BL-GN)
6	Throttle position (TP) switch pos. 1 Pos. 8, connector C54 at right suspension tower	(OR)
7	Engine coolant temperature (ECT) sensor fuel/ignition (MFI/DI) system pos. 2	(R-SB)
8	Engine coolant temperature (ECT) sensor pos. 2	(Y-SB)

Connector **C51** (8-pin)

1	Engine coolant temperature (ECT) sensor pos. 1	(Y-W)
2	Oil pressure sensor Fuel valve	(SB)
3	Timer relay, exhaust gas recirculation (EGR) pos. 4 Idle air control (IAC) switch, EGR	(BL)
4	Generator D+	(R)
5	Starter motor 50	(BL-GN)
6	Engine coolant temperature (ECT) sensor diesel	(BN)
7	Generator W	(R-W)
8	Engine coolant temperature (ECT) sensor pos. 2	(Y-SB)

Connector **C117** (2-pin)

1	Pressure sensor, turbodiesel (D24TIC)	(Y-R)
2	-	

Connectors in engine compartment at right suspension tower

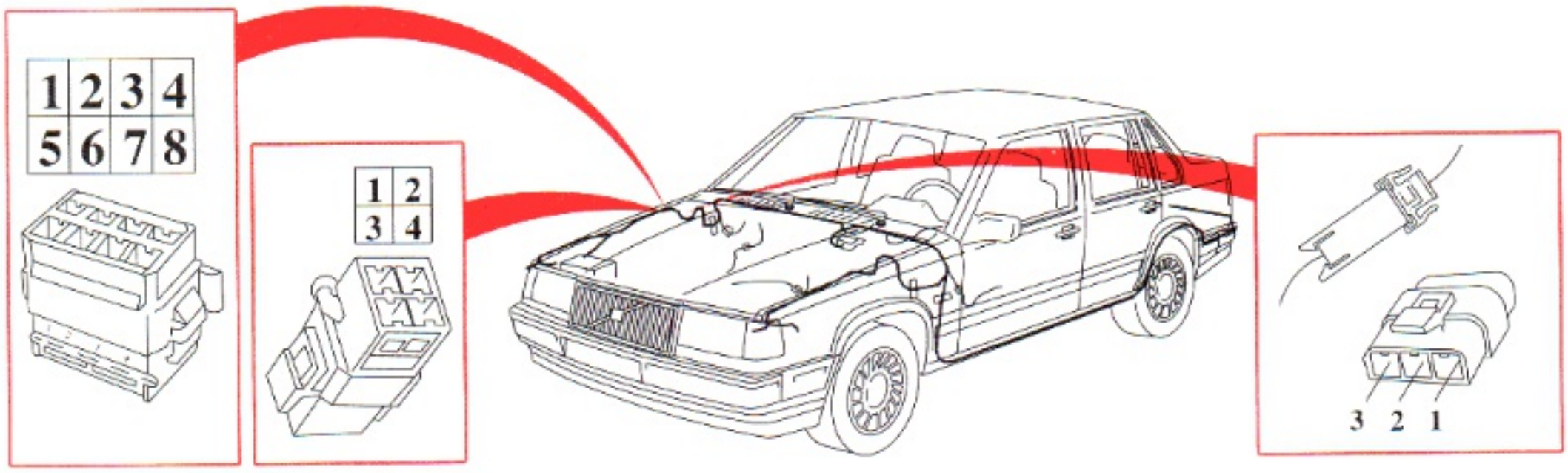

B230F, REX-I (DI)

Connector C54 (8-pin)

1	Idle air control (IAC) valve pos. 3	(R-SB)
2	Solenoid coupling, A/C	(GN-R)
3	-	
4	Engine coolant temperature (ECT) sensor, fuel/ignition (MFI/DI) system pos. 1	(GR-W)
5	-	
6	Ground, Regina (MFI) control module	(SB)
7	Throttle position (TP) switch pos. 3	(R-W)
8	Throttle position (TP) switch pos. 1 Pos. 6, connector C51 at left suspension tower	(OR)

Connector C55 (8-pin)

1	-	
2	Control module REX-I (DI) pos. 8 via pos. 5, connector C50 at left suspension tower	(Y)
3	-	
4	-	
5	Ground, Regina (MFI) control module	(SB)
6	Injections IAC pos. 1 via splice	(GN-R) (GN)
7	Injectors	(GR)
8	Ground, Regina (MFI) control module	(BN)

Connector C137 (4-pin)

1	Pressure sensor, intake manifold, air temp. sensor via pos. 8, connector C50 at left suspension tower	(BN-SB)
2	Pressure sensor, intake manifold via pos. 1, connector C50 at left suspension tower	(BL-R)
3	Pressure sensor, intake manifold via pos. 3, connector C50 at left suspension tower	(BL-SB)
4	Air temp. sensor via pos. 4, connector C50 at left suspension tower	(GN)

Connector C154 (1-pin)

1	High-pressure sensor A/C pos. 2	(GN-R)

B200FT, B230FT/GT

Connector C54 (8-pin)

1	Idle air control (IAC) valve pos. 2	(R-SB)
2	Solenoid coupling A/C	(GN-R)
3	Idle air control (IAC) valve pos. 1	(BL-Y)
4	Engine coolant temp. (ECT) sensor fuel/ignition (MFI/DI) system pos. 1	(GR-W)
5	-	
6	Ground, LH (MFI) control module	(SB)
7	Throttle position (TP) switch pos. 3 from high-output system (accessory)	(R-W)
8	Throttle position (TP) switch pos. 1 Pos. 6, connector C51 at left suspension tower	(OR)

Connector C55 (8-pin)

1	-	
2	ICM pos. 8 via pos. 7, connector C50 at left suspension tower	(Y)
3	High-power system (accessory) from LH (MFI) control module pos. 28	(GR-R)
4	-	
5	Ground, mass air flow (MAF) sensor	(BN)
6	-	
7	Injectors	(GR)
8	Ground, LH (MFI) control module	(BN)

Connector C154 (3-pin)

1	Low-speed pressure sensor, engine cooling fan Relay, engine cooling fan pos. 1B	(BL-SB)
2	High-speed pressure sensor, engine cooling fan Relay, engine cooling fan pos. 2B	(W-SB)
3	High-pressure sensor A/C pos. 2	(GN-R)

Connectors in engine compartment at right suspension tower

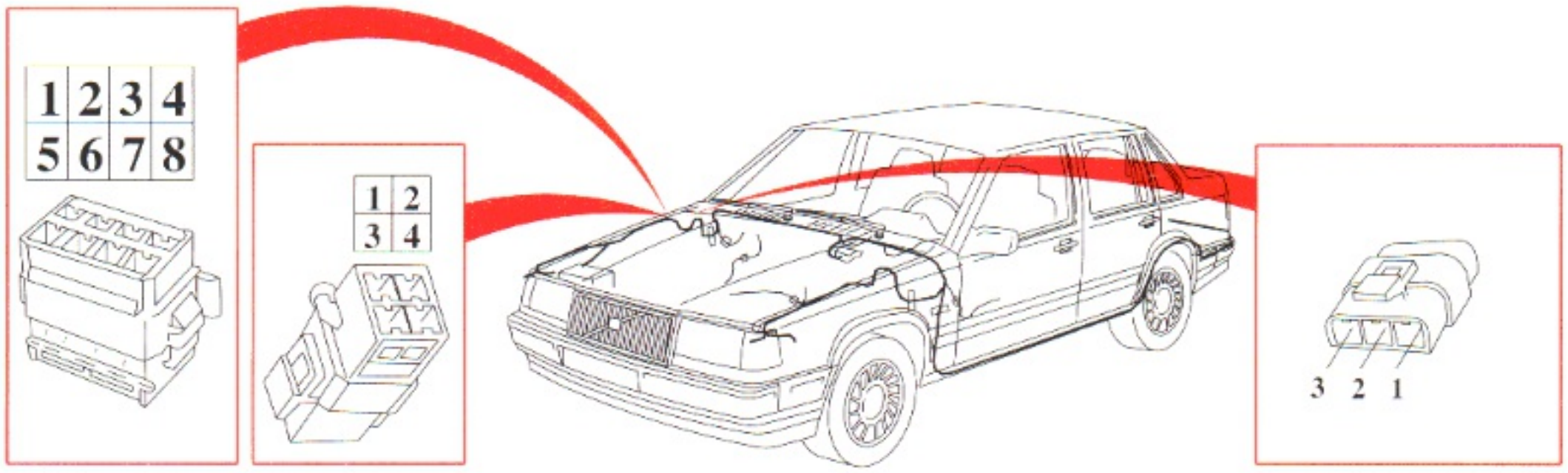

B200F/G, B230F/FB/FD/G-EZK (DI)

Connector **C54** (8-pin)

1	Idle air control (IAC) valve pos. 2	(R-SB)
2	Solenoid coupling A/C	(GN-R)
3	Idle air control (IAC) valve pos. 1	(BL-Y)
4	Engine coolant temperature (ECT) sensor, fuel/ignition (MFI/DI) system pos. 1	(GR-W)
5	-	
6	Ground, LH (MFI) control unit	(SB)
7	Throttle position (TP) switch pos. 3	(R-W)
8	Throttle position (TP) switch pos. 1 Pos. 6, connector C51 at left suspension tower	(OR)

Connector **C55** (8-pin)

1	-	
2	Control module EZK (DI) pos. 8 via pos. 7, connector C50 at left suspension tower	(Y)
3	Mass air flow (MAF) sensor pos. 6 via pos. 6, connector C50 at left suspension tower (B200/230G)	(Y-W)
4	Solenoid valve pulsed secondary air injection (PAIR) via pos. 8	(Y-R)
5	Ground, LH (MFI) control unit	(BN)
6	Injectors	(GN-R)
7	Injectors	(GR)
8	Ground, LH (MFI) control module	(BN)

Connector **C137** (4-pin)

1	Mass air flow (MAF) sensor pos. 2 via pos. 2, connector C50 at left suspension tower	(BL-GN)
2	Mass air flow (MAF) sensor pos. 3 via pos. 3, connector C50 at left suspension tower	(BL-R)
3	Mass air flow (MAF) sensor pos. 4 via pos. 4, connector C50 at left suspension tower	(BL-W)
4	Mass air flow (MAF) sensor pos. 5 via pos. 5, connector C50 at left suspension tower	(BL-Y)

Connector **C154** (3-pin)

1	Low-speed pressure sensor, engine cooling fan Relay, engine cooling fan pos. 1B	(BL-SB)
2	High-speed pressure sensor, engine cooling fan Relay, engine cooling fan pos. 2B	(W-SB)
3	High-pressure sensor, A/C	(GN-R)

Connectors for doors

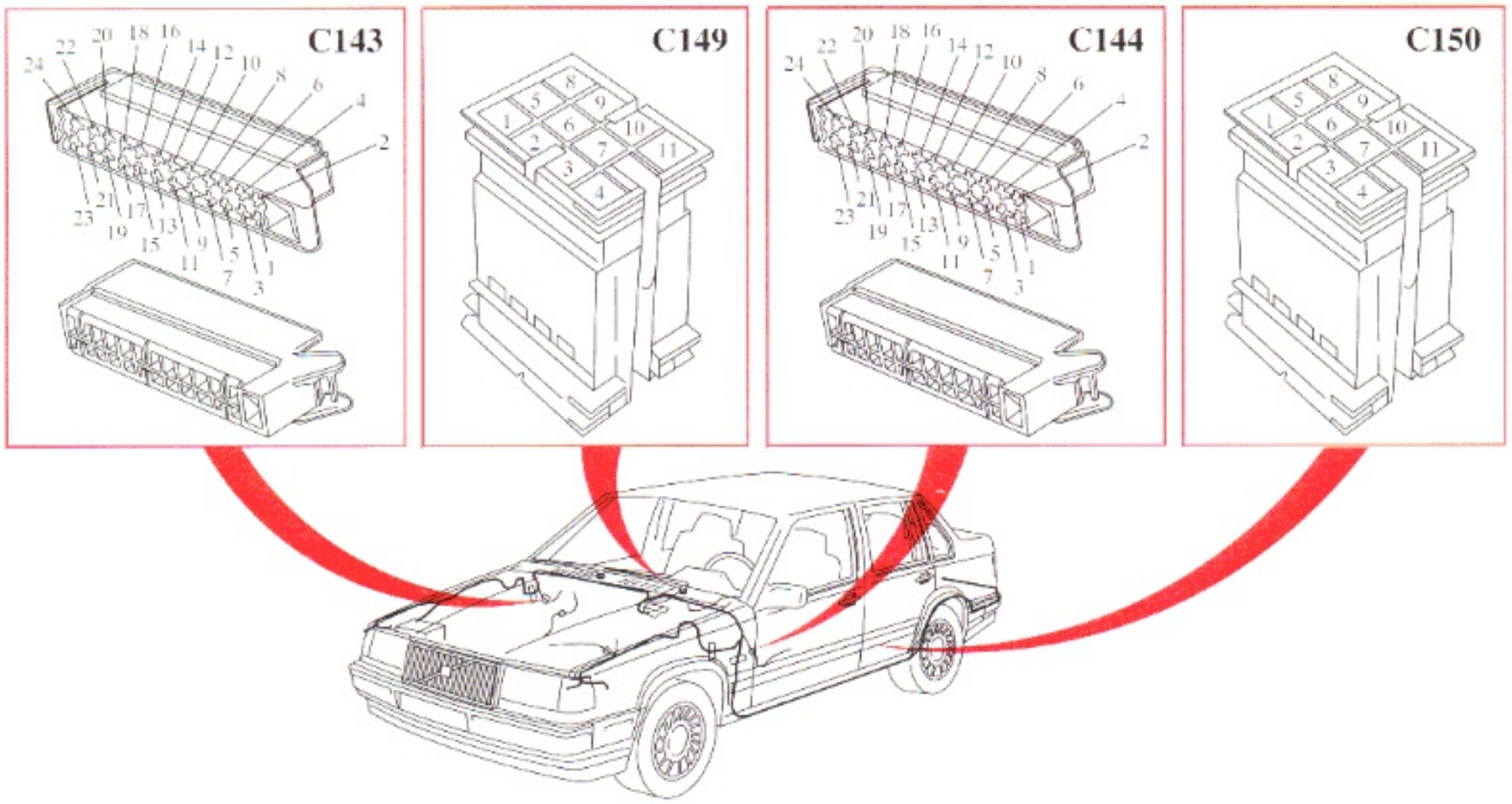

Connector **C143** (24-pin) at A-post passenger's side

1	Warning light	(GN-R)
2	Warning light	(W-SB)
3	Loudspeaker +	(GR-W) (Y-W)
4	Loudspeaker -	(GR)(W)
5	Central lock, unlocking	(R-W)
6	Central lock, locking	(BL-R)
7	Heating, power door mirrors	(BL-GN)
8	Power door mirrors	(BL-W)
9	Power door mirrors	(BN-W)
10	-	
11	Power door mirrors	(GN-W)
12	-	
13	-	
14	-	
15	-	
16	-	
17	-	
18	-	
19	-	
20	-	
21	Ground connector, power door mirrors	(SB)
22	Window lift motor	(BL)
23	Window lift motor	(GR-R)
24	Window lift motor, supply	(Y-R)

Connector **C144** (24-pin) at A-post, driver's side

1	Warning light	(GN-R)
2	Warning light	(W-SB)
3	Loudspeaker +	(BL-W) (Y-W)
4	Loudspeaker -	(W)
5	Central lock, unlocking	(R-W)
6	Central lock, locking	(BL-R)
7	Heating, power door mirrors	(BL-GN)
8	Power door mirrors passenger's door	(BL-W)
9	Power door mirrors passenger's door	(BN-W)
10	Power door mirrors, supply	(OR)
11	Power door mirrors passenger's door	(GN-W)
12	Ground connection, central locking	(SB) (BN-SB)
13	Central lock, unlocking	(GN-W) (GN-SB)
14	Central lock, locking	(Y-W) (Y-SB)
15	Window lift motor rear door pass. side	(BN)
16	Window lift motor rear door pass. side	(Y)
17	Window lift motor rear door driver's side	(GN)
18	Window lift motor rear door driver's side	(GR)
19	ON/OFF power window lift motors, rear doors	(P)
20	Window lift motor supply	(Y-R)
21	Ground connection, power window lift motors, power door mirrors	(SB)
22	Window lift motor passenger's door	(BL)
23	Window lift motor passenger's door	(R)
24	-	

Connector **C149** (11-pin) at B-post, passenger's side

1	Central lock, unlocking	(R-W)
2	Central lock, locking	(BL-R)
3	Warning light door	(GN-R)
4	Warning light door	(W-SB)
5	Window lift motor ON/OFF	(P)
6	Window lift motor	(BN)
7	Window lift motor	(R)
8	Loudspeaker +	(Y-W)
9	Loudspeaker -	(W)
10	-	
11	-	

Connector **C150** (11-pin) at B-post, driver's side

1	Central lock, unlocking	(R-W)
2	Central lock, locking	(BL-R)
3	Warning light door	(GN-R)
4	Warning light door	(W-SB)
5	Window lift motor ON/OFF	(P)
6	Window lift motor	(BN)
7	Window lift motor	(R)
8	Loudspeaker +	(Y-W)
9	Loudspeaker -	(W)
10	- -	
11	- -	

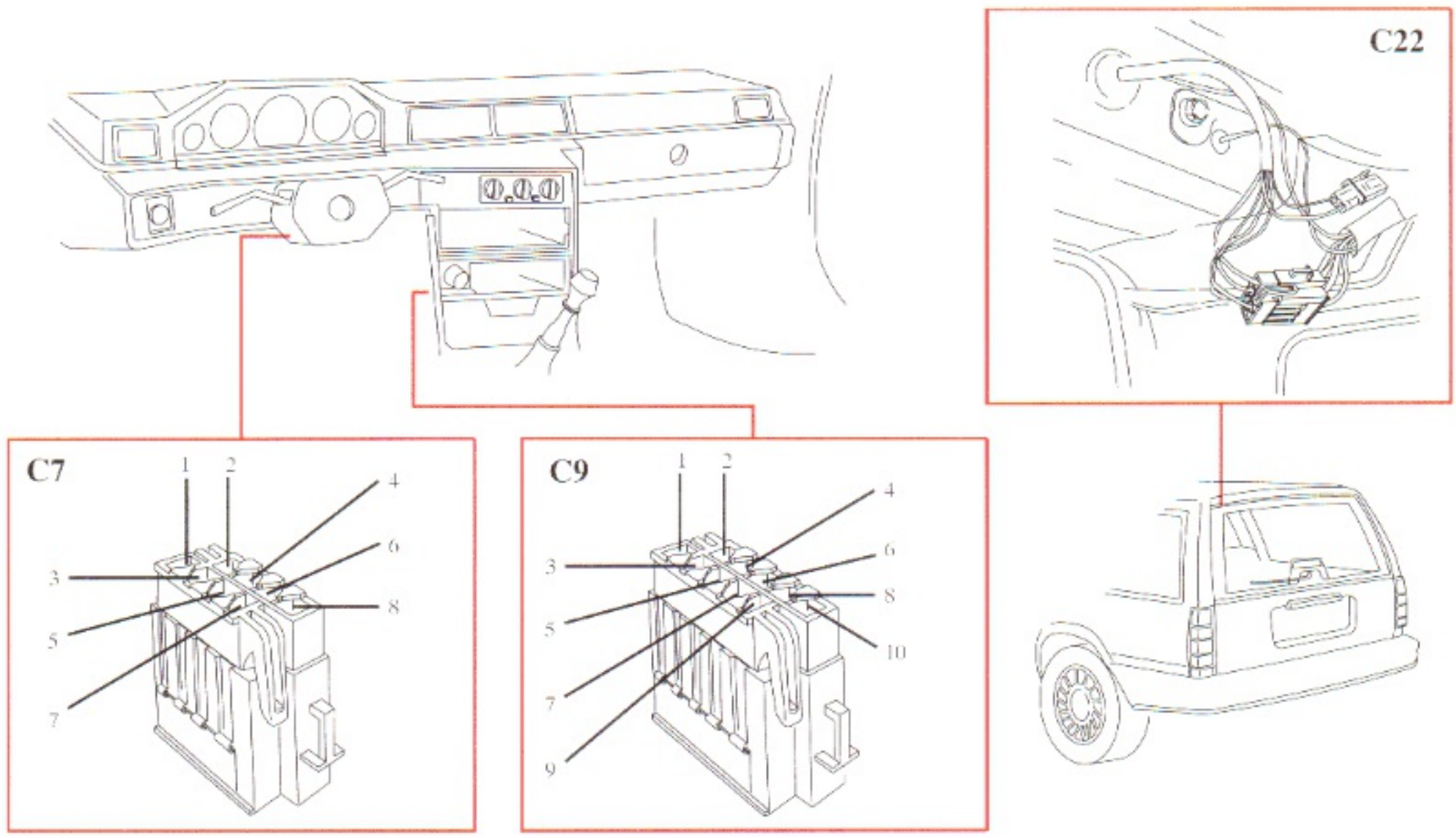

Connector **C7** (8-pin) at steering column

1	Brake light switch Relay P-shift lock, pos. 1	(Y-BN)
2	Brake light switch	(GN-Y)
3	Switch, brake pedal	(W-SB)
4	Switch, brake pedal or switch, clutch pedal	(OR-SB)
5	Relay P-shift lock, pos. 2 Bridge connector to pin 6	(P)
6	Bridge connector to pin 5	(P)
7	Relay P-shift lock, pos. 3	(BN)
8	Relay P-shift lock, pos. 4	(BN-W)

Connector **C9** (10-pin) at centre console

1	Seat belt lock, driver's seat pos. 3	(GN)
2	Parking brake switch	(BN)
3	Ashtray lighting Switch light, seat heater	(GR) (GR)
4	-	
5	-	
6	Ashtray lighting Switch lighting, seat heating	(BL)
7	-	
8	Switch, heated driver's seat	(R-SB)
9	Switch, heated passenger's seat	(R-SB)
10	Ground connection, radio pos. A12	(SB)

Connector **C22** (6-pin) at tailgate (5-door estate)

1	Heated rear window	(Y)
2	Number plate lights	(W)
3	Tailgate wiper	(OR)
4	Tailgate wiper	(Y-W)
5	Extra brake light	(Y-SB)
6	Number plate lights Tailgate wiper Heated rear window Extra brake light	(SB)

Ground connections

31/1

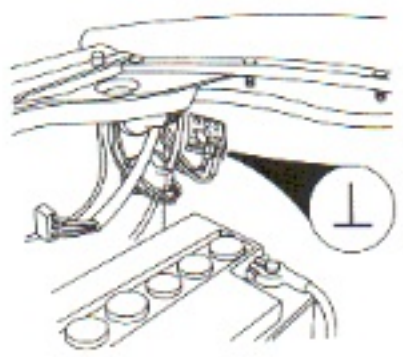

Right front light
Right turn signal, front
Right parking light, front
(Washer motors)
(Washer fluid level sensor)
Heated oxygen sensor (HO2S) pre-heating
(Relay, radio interference
suppression)
Right headlight wiper motor
(Hydraulic unit, ABS)
Right front fog light
Right beam width control
(Low-speed pressure sensor, engine cooling fan)
(High-speed pressure sensor, engine cooling fan)

31/3

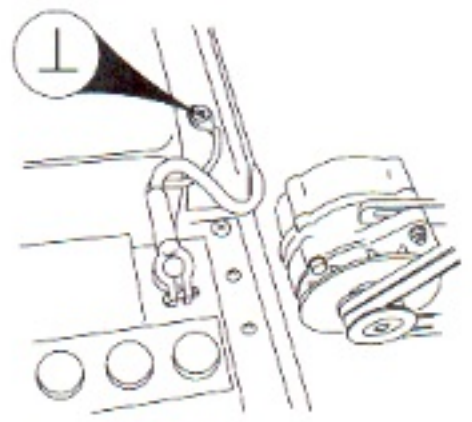

Ground connection
battery-body

31/4

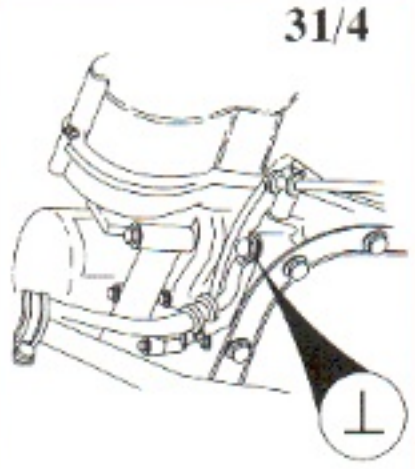

Ground connection
battery-engine

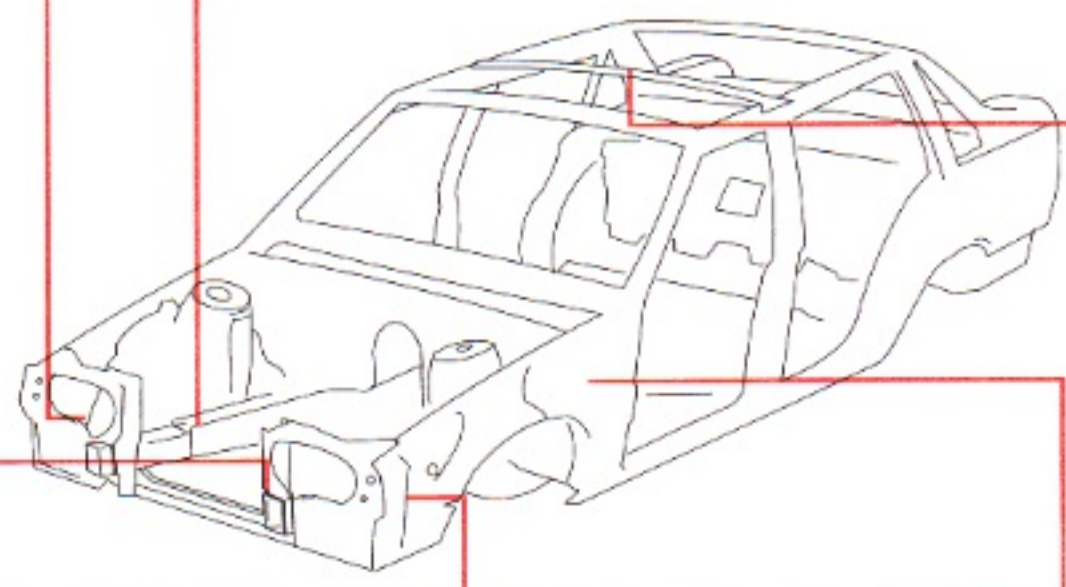

31/5

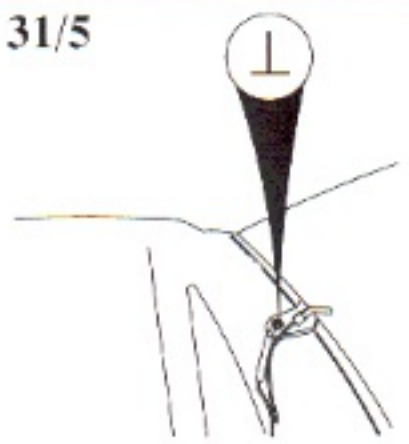

Heated rear window

31/2

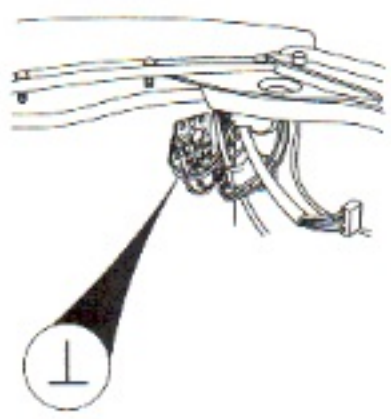

Left front light
Left turn signal, front
Left parking light, front
Headlight wiper motor, left
(Relay, radio interference suppression)
(Wiper motors)
(Washer fluid level sensor)
Left turn signal side repeater
Brake fluid level sensor
(Hydraulic unit, ABS)
Left front fog light
Relay, glow plug mechanism
Left beam width control
OBD data link connector
(Low-speed pressure sensor, engine cooling fan)
(High-speed pressure sensor, engine cooling fan)

31/6

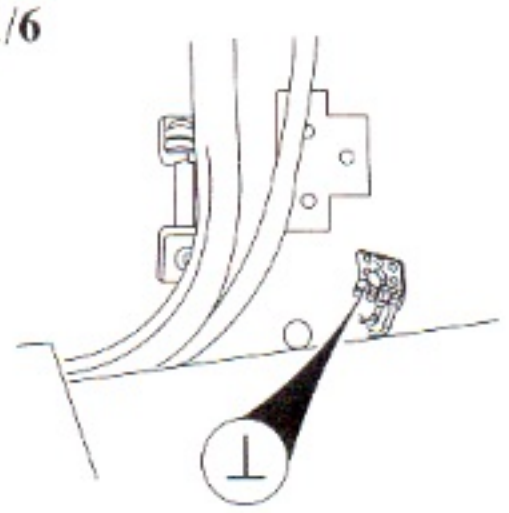

Control module, ABS
Speedometer
Control module, cruise control

31/12

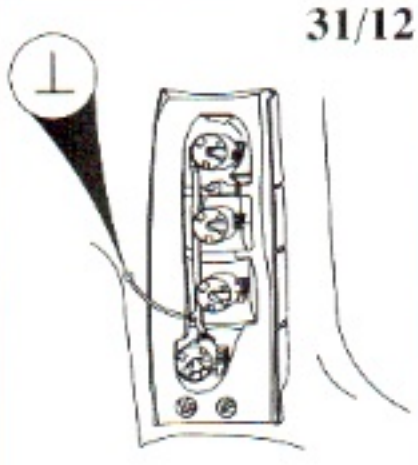

Right tail light

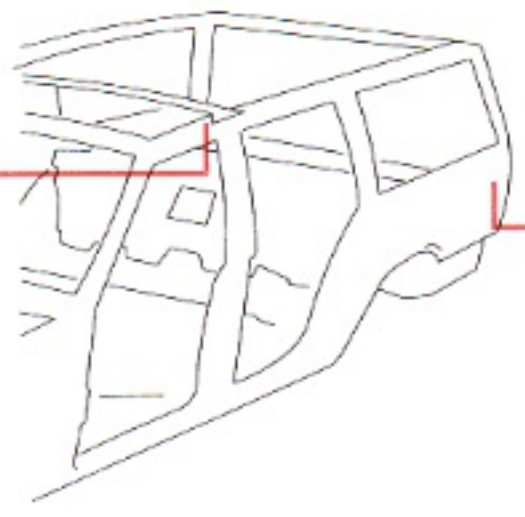

31/11

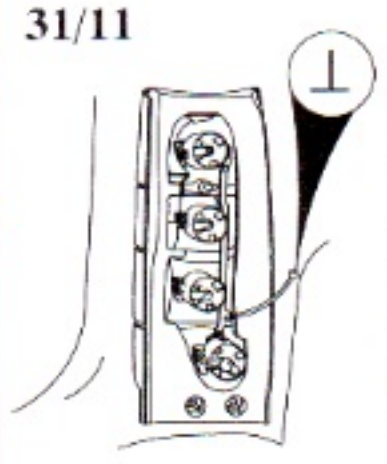

Left tail light
Extra brake light
Power antenna
Tailgate wiper motor
Trunk lighting
Number plate lighting
Fuel primer pump (LH-2.4) (MFI)
Fuel pump (Regina) (MFI)
Interior lighting
Reading lights
Towing hook
CD-autochanger

31/9

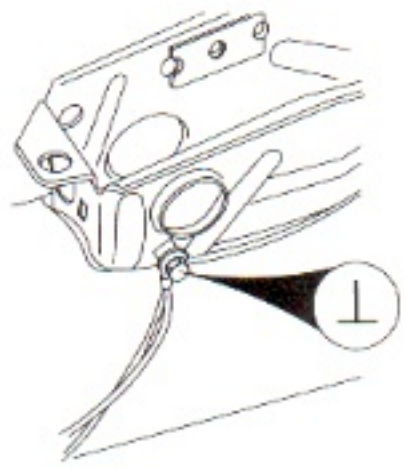

Power seats
Parking brake switch
Heated seats
Seat belt lock, driver's seat

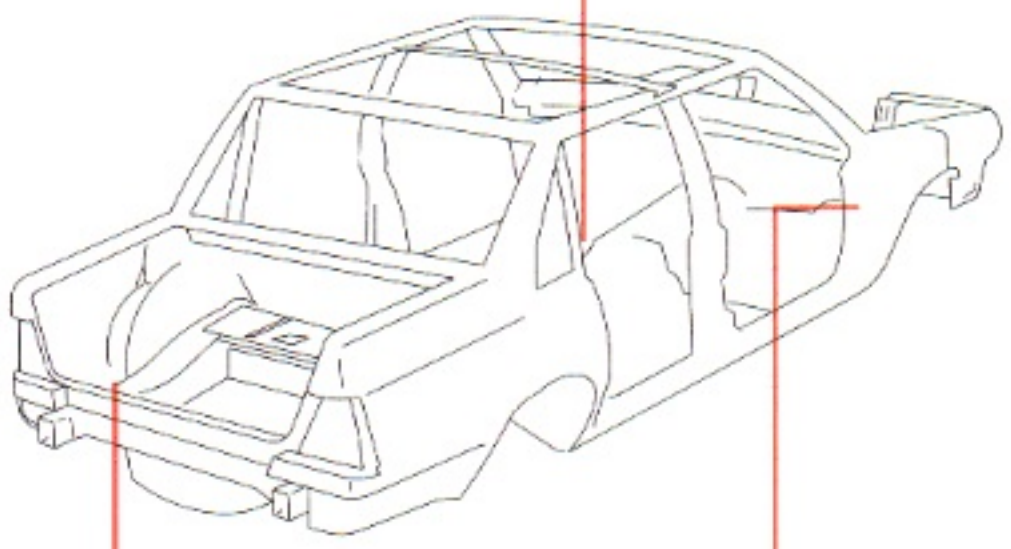

31/13

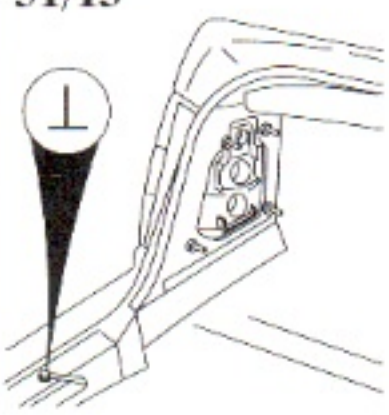

Fuel primer pump (LH 2.4) (MFI)
Fuel pump (Regina) (MFI)
Tail lights
Number plate lighting
Trunk lighting
Extra brake light
Power antenna
Interior lighting
Reading lamps
Towing hook
CD-autochanger

31/10

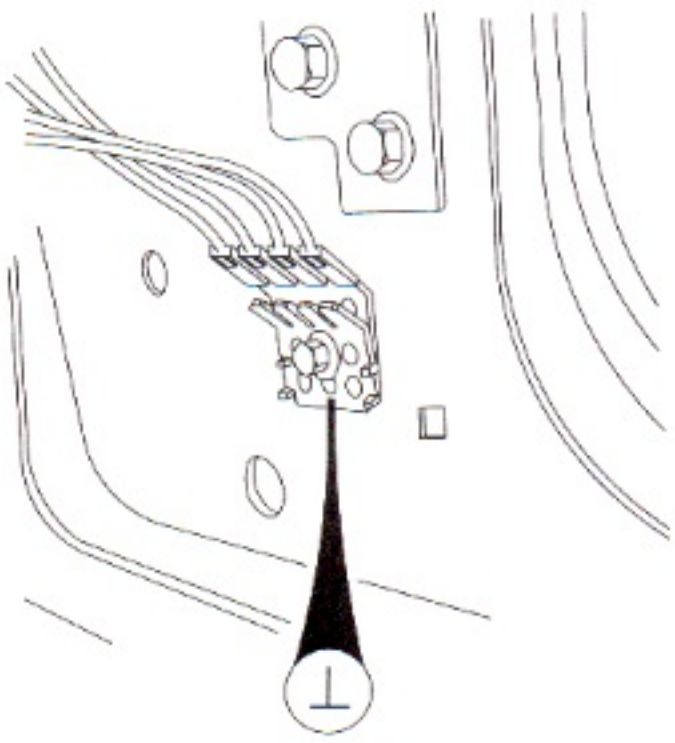

Cabin fan
Ground connection rail in electrical distribution unit
Bulb malfunction indicator
Flasher unit
Intermittent relay, wipers
Headlight relay
Power sunroof
Overdrive relay
Central lock motors
Power door mirrors
Power windows
Bypass relay 15I (window lifts/seat heaters)
(Accessories)
Central lock relay
Relay, seat belt reminder
Cigar lighter
Radio
Glove compartment lighting
Separate amplifier, radio
Fuel pump (LH 2.4) (MFI)
Fog light switch
Combined instrument
Fuel gauge
Electronic climate unit ECC
Control module DIM-DIP
Right turn signal side repeater
Bypass relay, high beam
Control lighting
Vanity mirror light
Relay, exhaust gas temp. sensor (Japan)
Relay, P-shift lock
Beam width control
Switch, heated rear window/door mirrors
Switch, power door mirrors
Ambient air temperature gauge
Anti-theft alarm

LH-jetronic 2.4 multiport fuel injection system (MFI) (B 200 F/G, B 230 F/FB/FD/G)

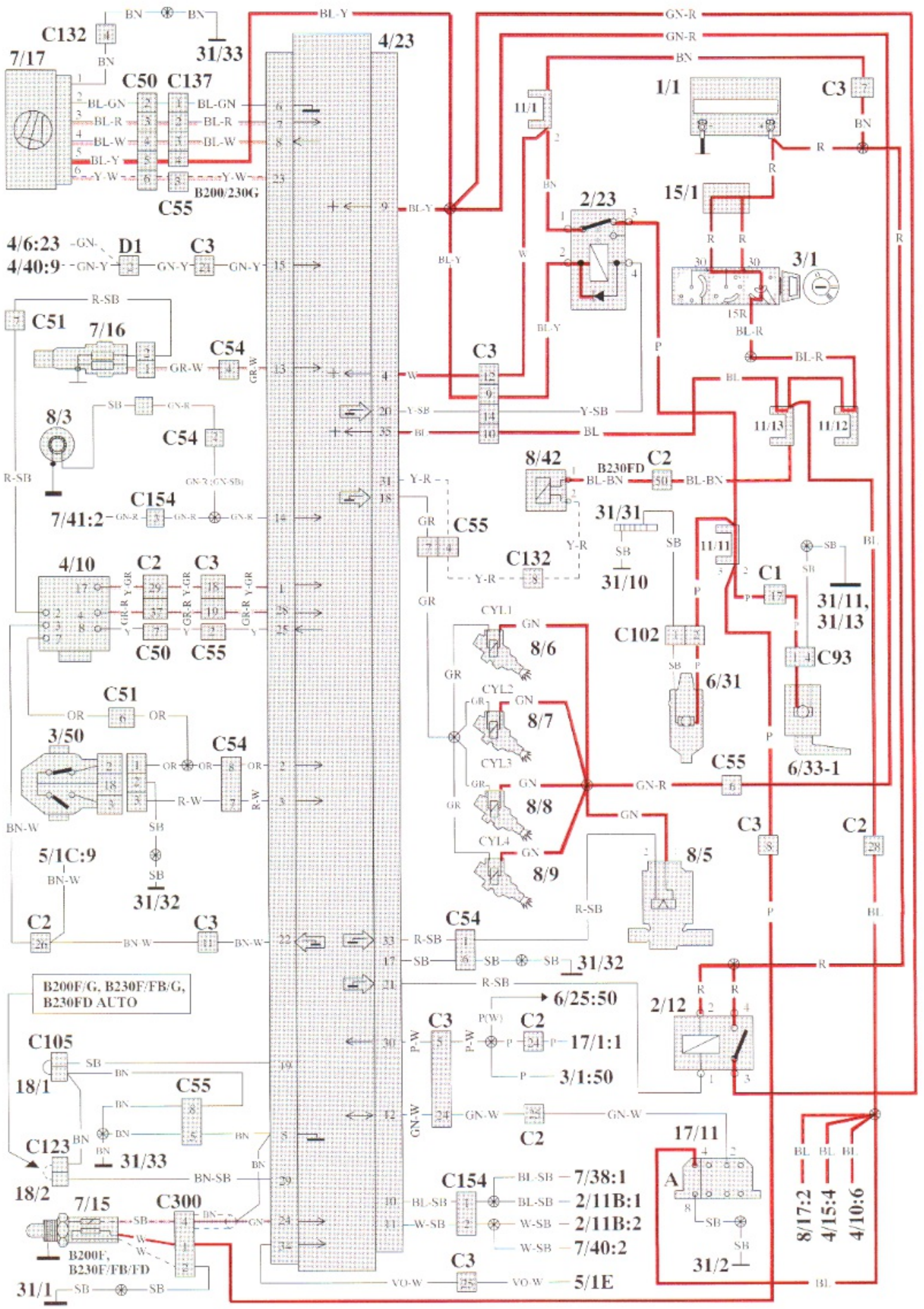

Regina multiport fuel injection system (MFI) (B 230 F)

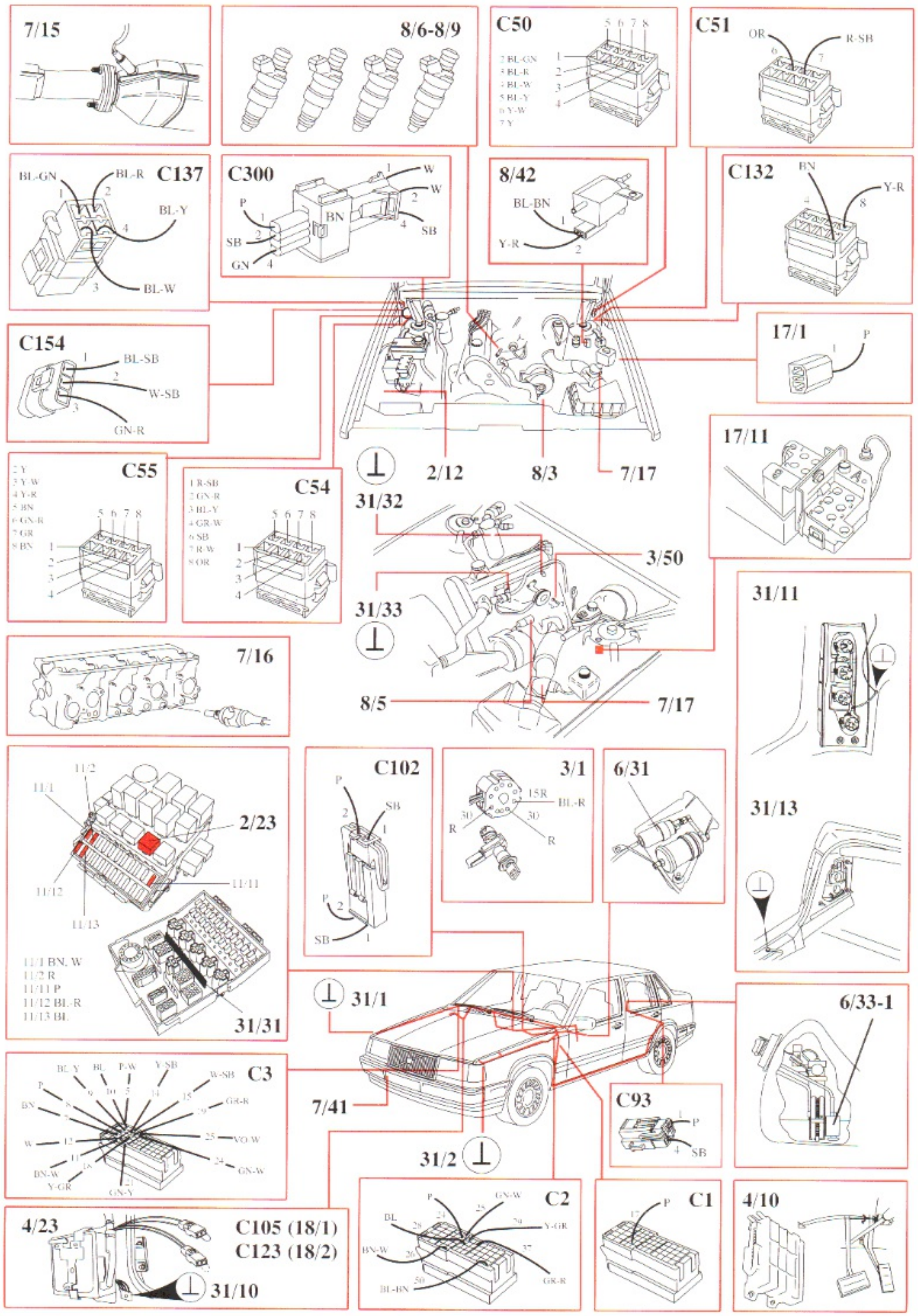

LH-jetronic 2.4 multiport fuel injection system (MFI) (B 200 FT, B 230 FT/GT)

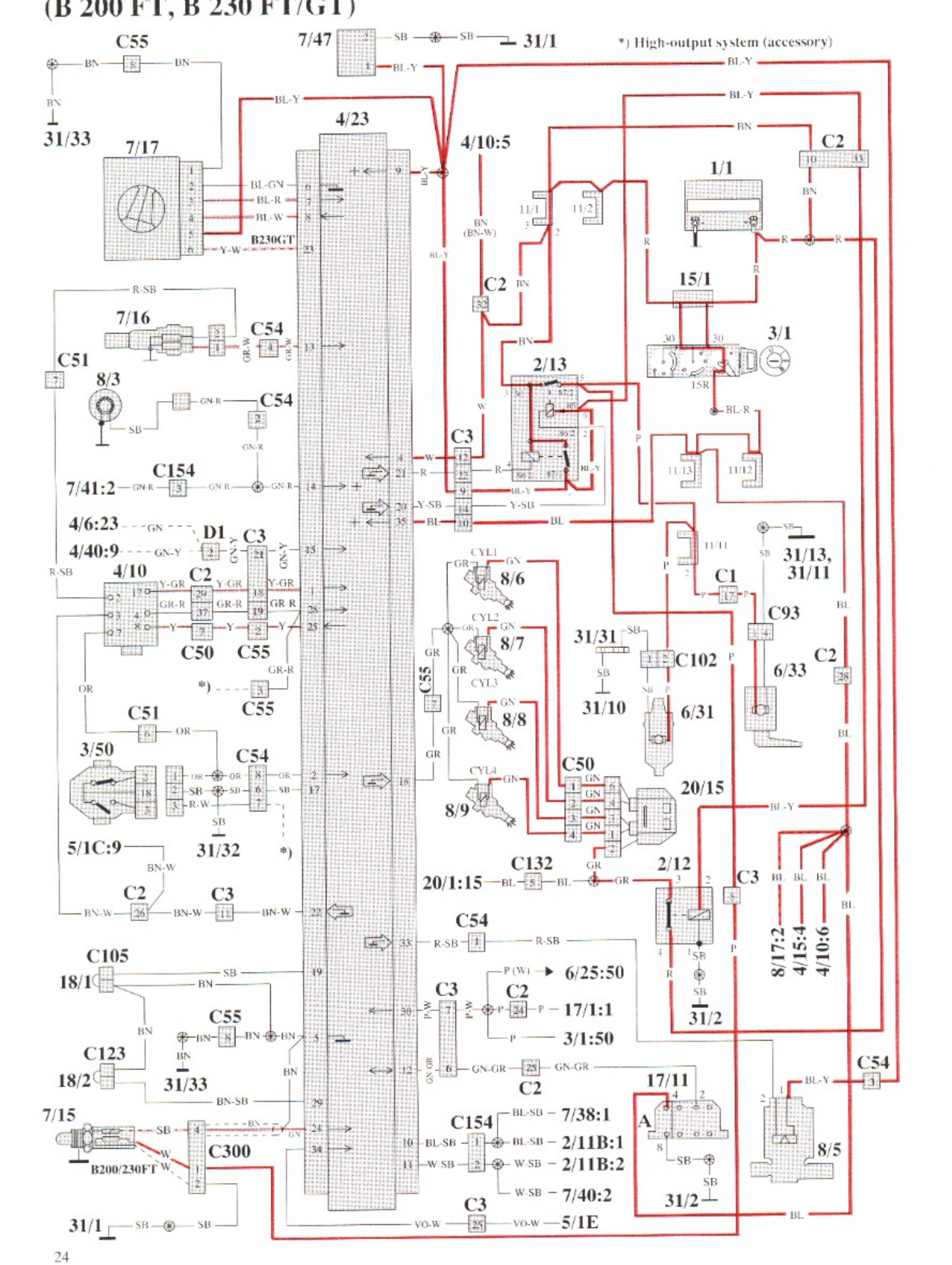

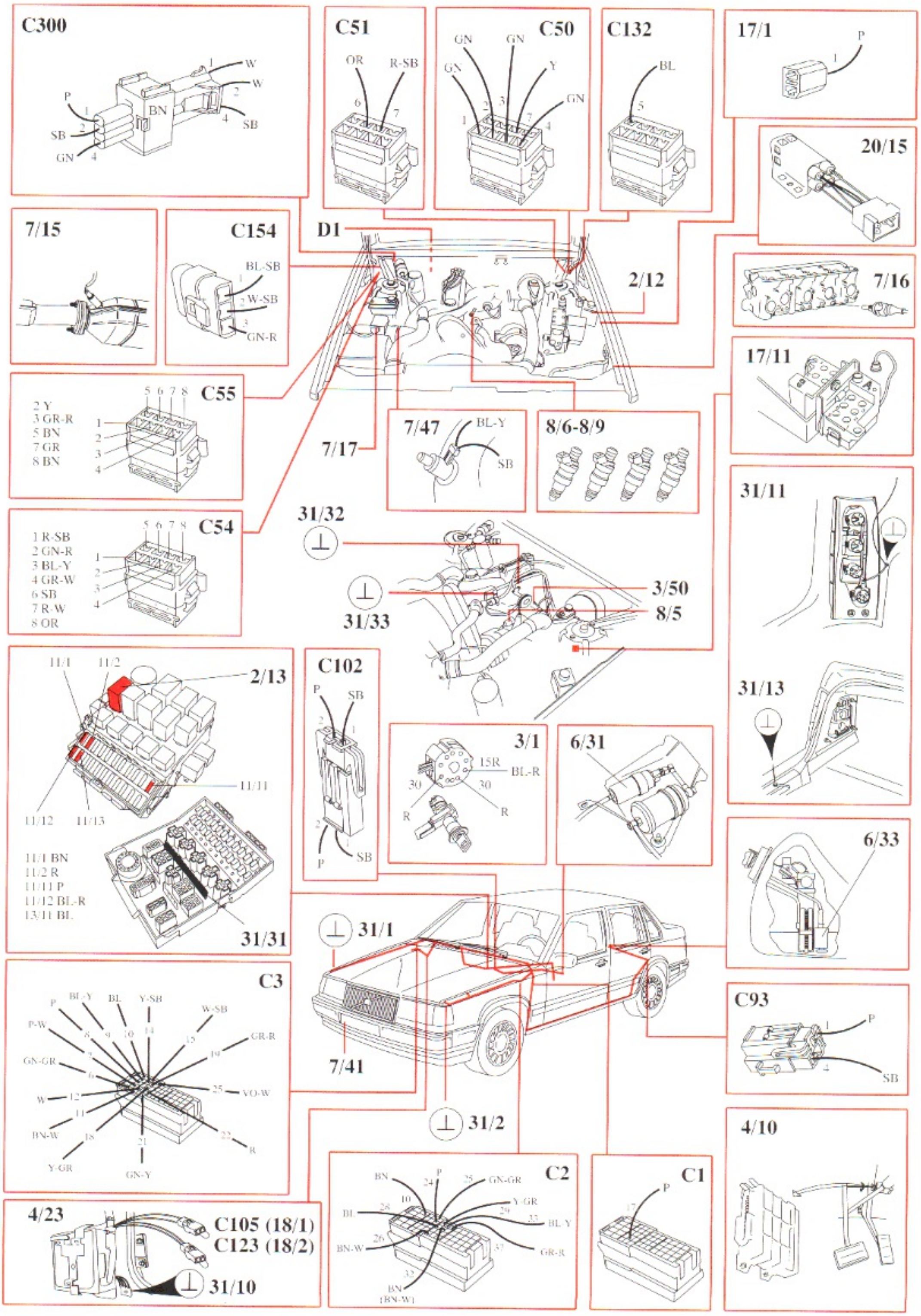
C300
1 W
2 W
P 1
BN
4 SB
SB 2
GN 4
C51
OR 6
R-SB 7
C50
GN 1
GN 2
3
Y 7
GN 4
C132
BL 5
17/1
P 1
20/15
7/15
C154
BL-SB 1
W-SB 2
GN-R 3
D1
2/12
7/16
17/11
C55
2 Y
3 GR-R
5 BN
7 GR
8 BN
5 6 7 8
1
2
3
4
7/17
7/47
BL-Y
SB
8/6-8/9
31/11
C54
1 R-SB
2 GN-R
3 BL-Y
4 GR-W
6 SB
7 R-W
8 OR
5 6 7 8
31/32
31/33
3/50
8/5
31/13
2/13
11/1
11/2
11/11
11/12
11/13
11/1 BN
11/2 R
11/11 P
11/12 BL-R
13/11 BL
31/31
C102
P 2
SB 1
2
1
P
SB
3/1
15R
BL-R
30
30
R
R
6/31
6/33
31/1
7/41
C3
P
BL-Y
BL
Y-SB
W-SB
P-W
GR-R
GN-GR
W
VO-W
BN-W
R
Y-GR
GN-Y
C93
P 1
SB 4
31/2
4/10
C2
BN
P
GN-GR
Y-GR
BL
BL-Y
BN-W
GR-R
BN
(BN-W)
C1
P
17
4/23
C105 (18/1)
C123 (18/2)
31/10

Regina (B 230 F)

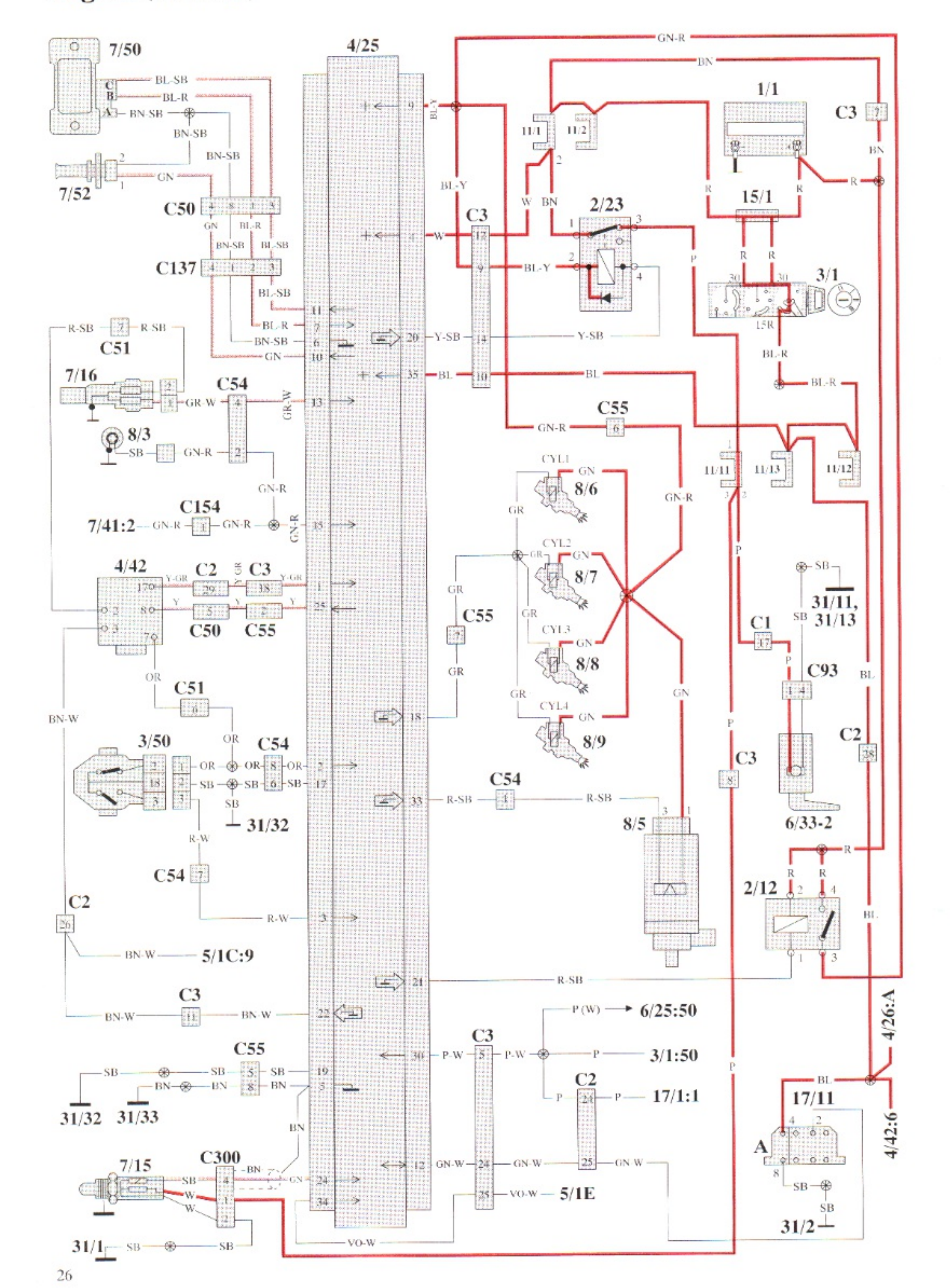

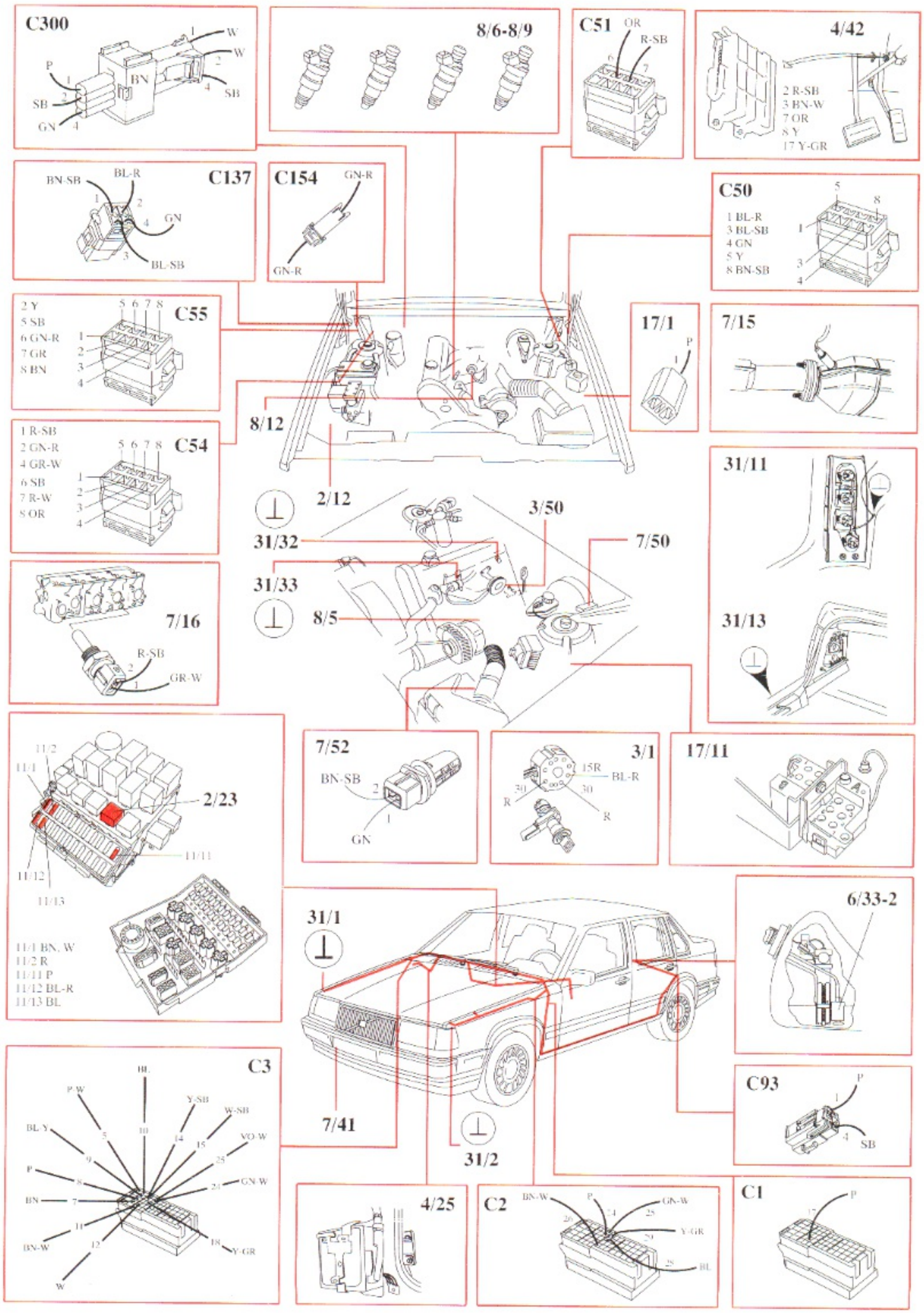
C300
P
SB
GN
BN
W
W
SB
8/6-8/9
C51
OR
R-SB
4/42
2 R-SB
3 BN-W
7 OR
8 Y
17 Y-GR
C137
BN-SB
BL-R
GN
BL-SB
C154
GN-R
GN-R
C50
1 BL-R
3 BL-SB
4 GN
5 Y
8 BN-SB
C55
2 Y
5 SB
6 GN-R
7 GR
8 BN
17/1
P
7/15
C54
1 R-SB
2 GN-R
4 GR-W
6 SB
7 R-W
8 OR
8/12
2/12
31/32
31/33
8/5
3/50
7/50
31/11
31/13
7/16
R-SB
GR-W
2/23
11/2
11/1
11/11
11/12
11/13
11/1 BN, W
11/2 R
11/11 P
11/12 BL-R
11/13 BL
7/52
BN-SB
GN
3/1
15R
BL-R
30
R
17/11
31/1
7/41
31/2
6/33-2
C93
P
SB
C3
BL
P-W
Y-SB
W-SB
BL-Y
VO-W
P
GN-W
BN
BN-W
Y-GR
W
4/25
C2
BN-W
P
GN-W
Y-GR
BL
C1
P

Engine cooling fan

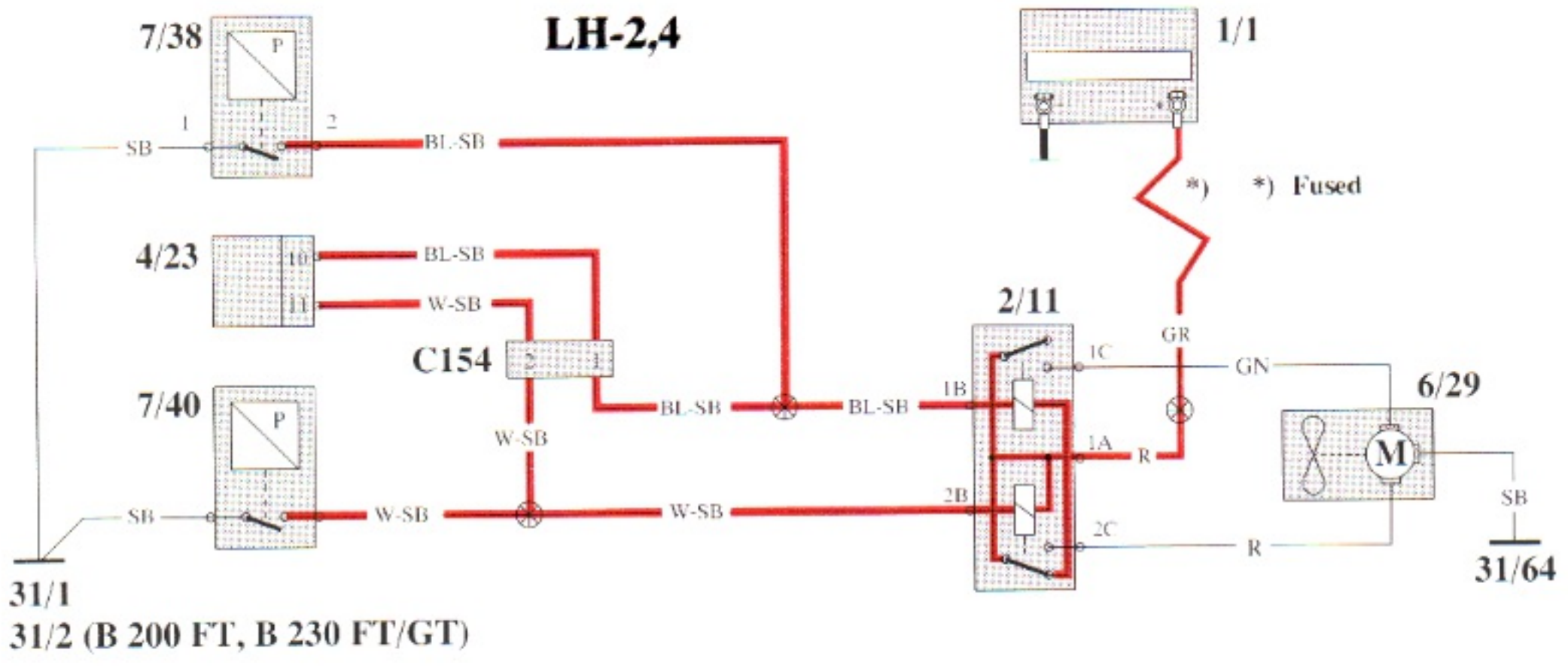

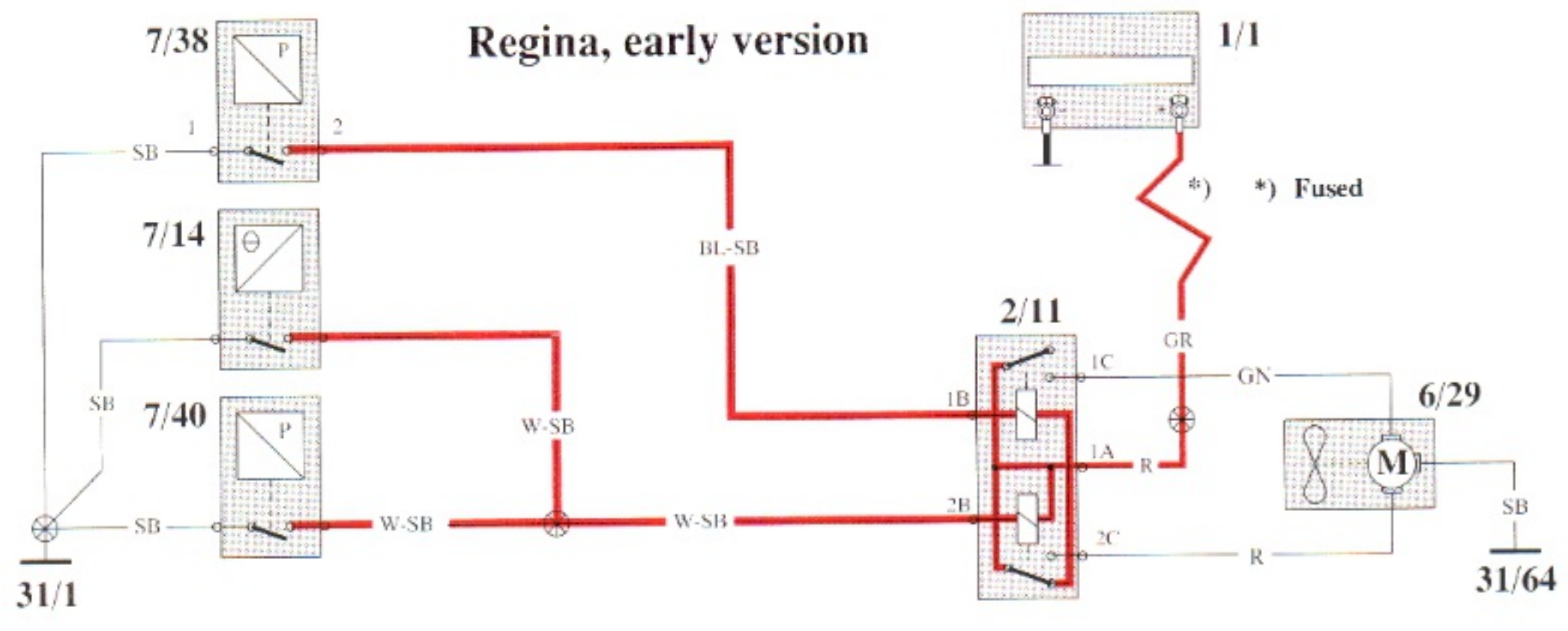

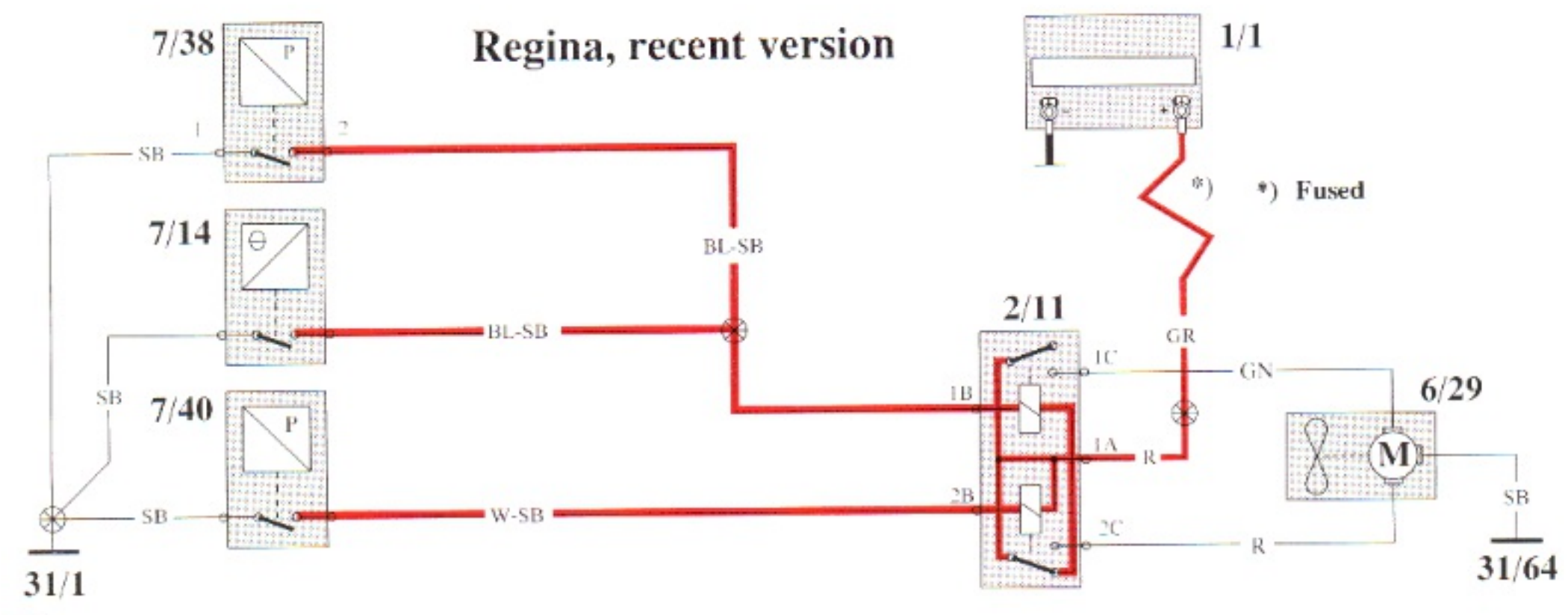

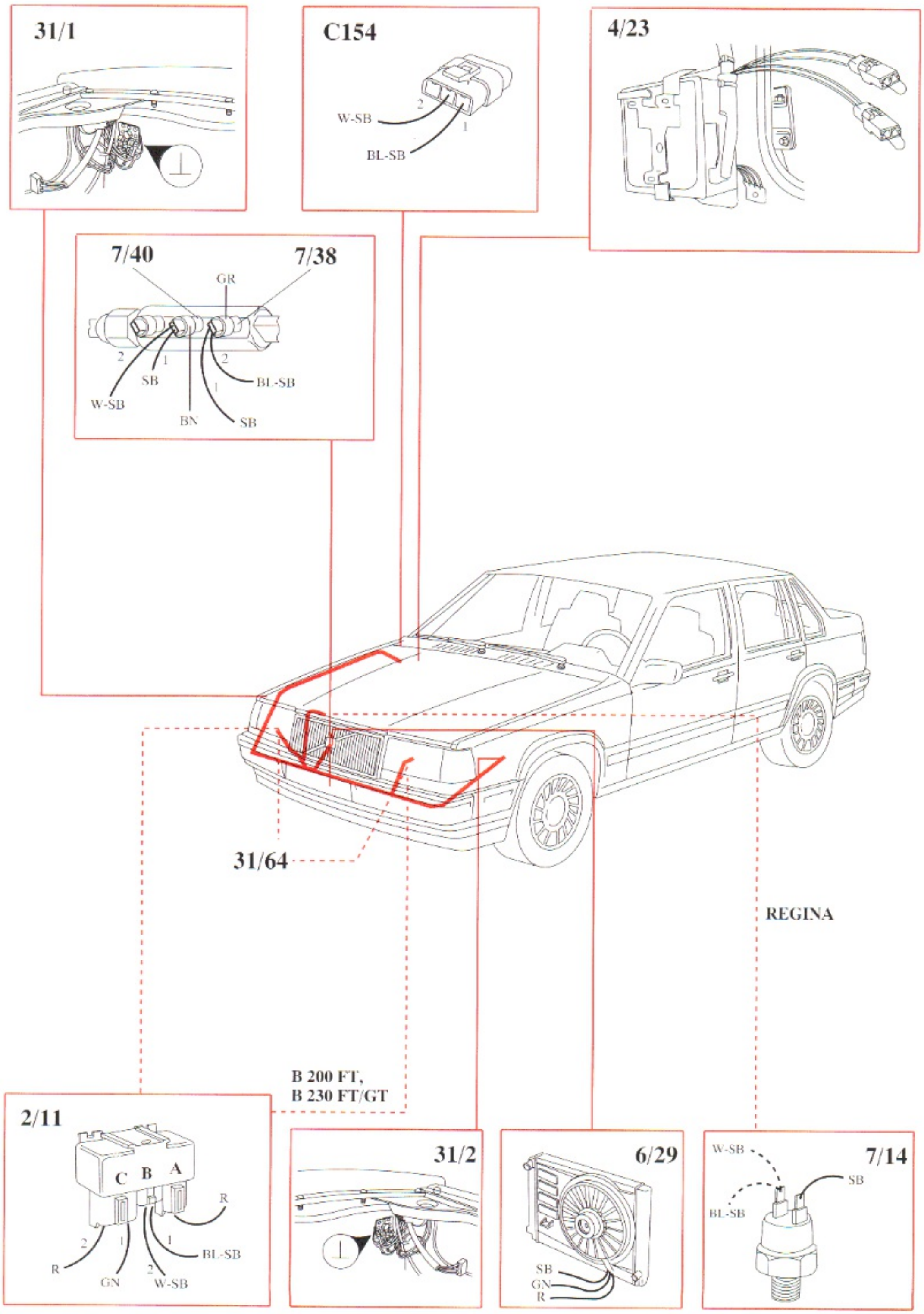
31/1
C154
W-SB
BL-SB
4/23
7/40
7/38
GR
W-SB
SB
BN
SB
BL-SB
31/64
REGINA
B 200 FT,
B 230 FT/GT
2/11
C B A
R
GN
W-SB
BL-SB
31/2
6/29
SB
GN
R
7/14
W-SB
SB
BL-SB

Cruise control

Schematic presentation on page 32

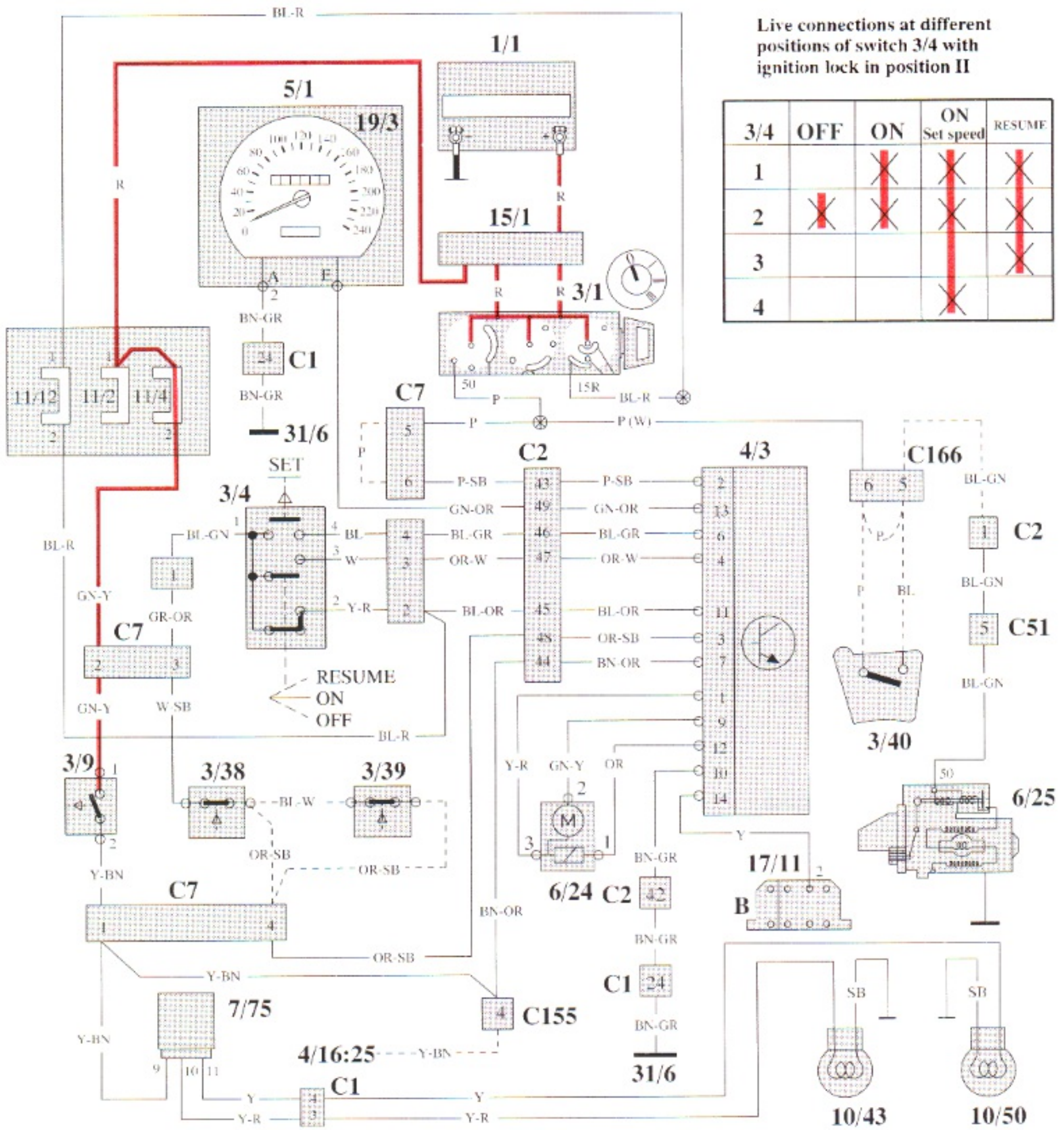

Live connections at different positions of switch 3/4 with ignition lock in position II

3/4	OFF	ON	ON Set speed	RESUME
1		X	X	X
2	X	X	X	X
3				X
4			X	

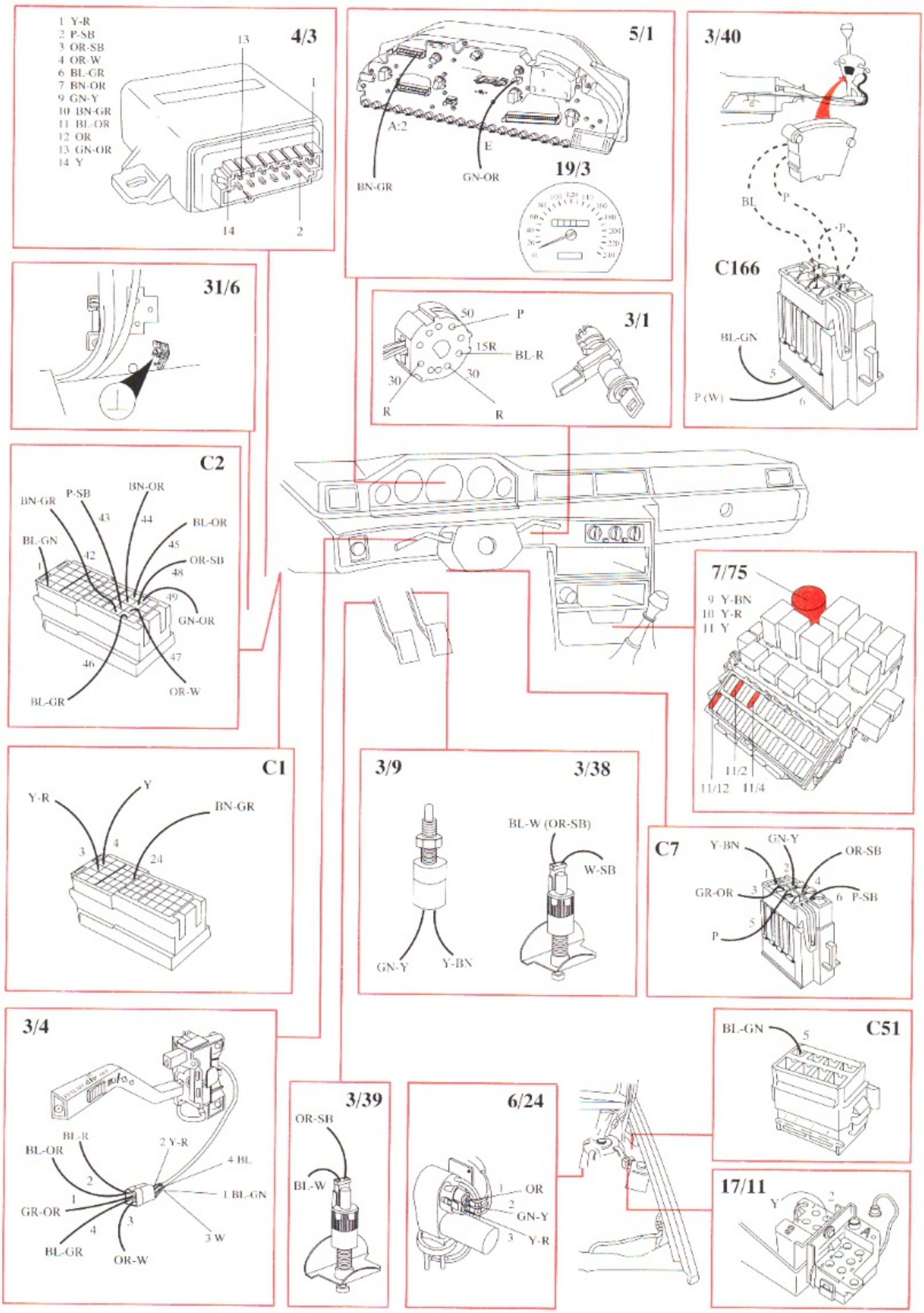
4/3
1 Y-R
2 P-SB
3 OR-SB
4 OR-W
6 BL-GR
7 BN-OR
9 GN-Y
10 BN-GR
11 BL-OR
12 OR
13 GN-OR
14 Y
13
1
14
2
5/1
A:2
E
BN-GR
GN-OR
19/3
3/40
BL
P
P
C166
BL-GN
5
P (W)
6
31/6
3/1
50
P
15R
BL-R
30
30
R
R
C2
BN-GR
P-SB
BN-OR
43
44
BL-OR
BL-GN
42
45
OR-SB
48
49
GN-OR
46
47
BL-GR
OR-W
7/75
9 Y-BN
10 Y-R
11 Y
11/2
11/12
11/4
C1
Y-R
Y
BN-GR
3
4
24
3/9
3/38
BL-W (OR-SB)
W-SB
GN-Y
Y-BN
C7
Y-BN
GN-Y
OR-SB
1
2
4
GR-OR
3
6
P-SB
5
P
3/4
BL-R
BL-OR
2 Y-R
4 BL
2
1
1 BL-GN
GR-OR
4
3
3 W
BL-GR
OR-W
3/39
OR-SB
BL-W
6/24
1
OR
2
GN-Y
3
Y-R
C51
BL-GN
5
17/11
Y
2
A

Cruise control, function (schematic presentation)

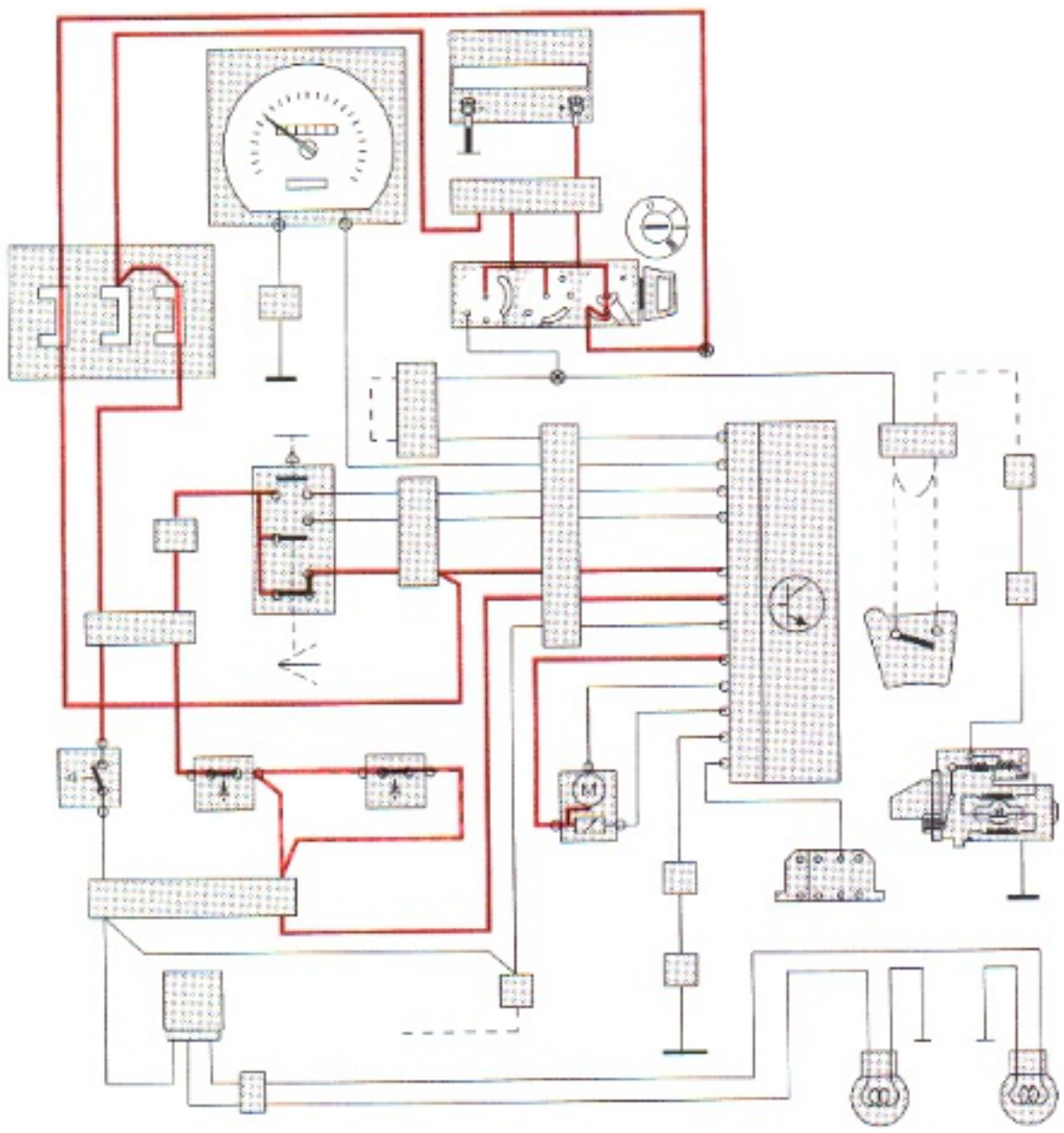

Setting speed

Switch set to ON.
SET-button pressed in and released.
Speed above 35 km/h (20 mph) and neither brake nor clutch pedal pressed.

Maintaining set speed

Switch set to ON.
Speed above 35 km/h (20 mph) and neither brake nor clutch pedal pressed.

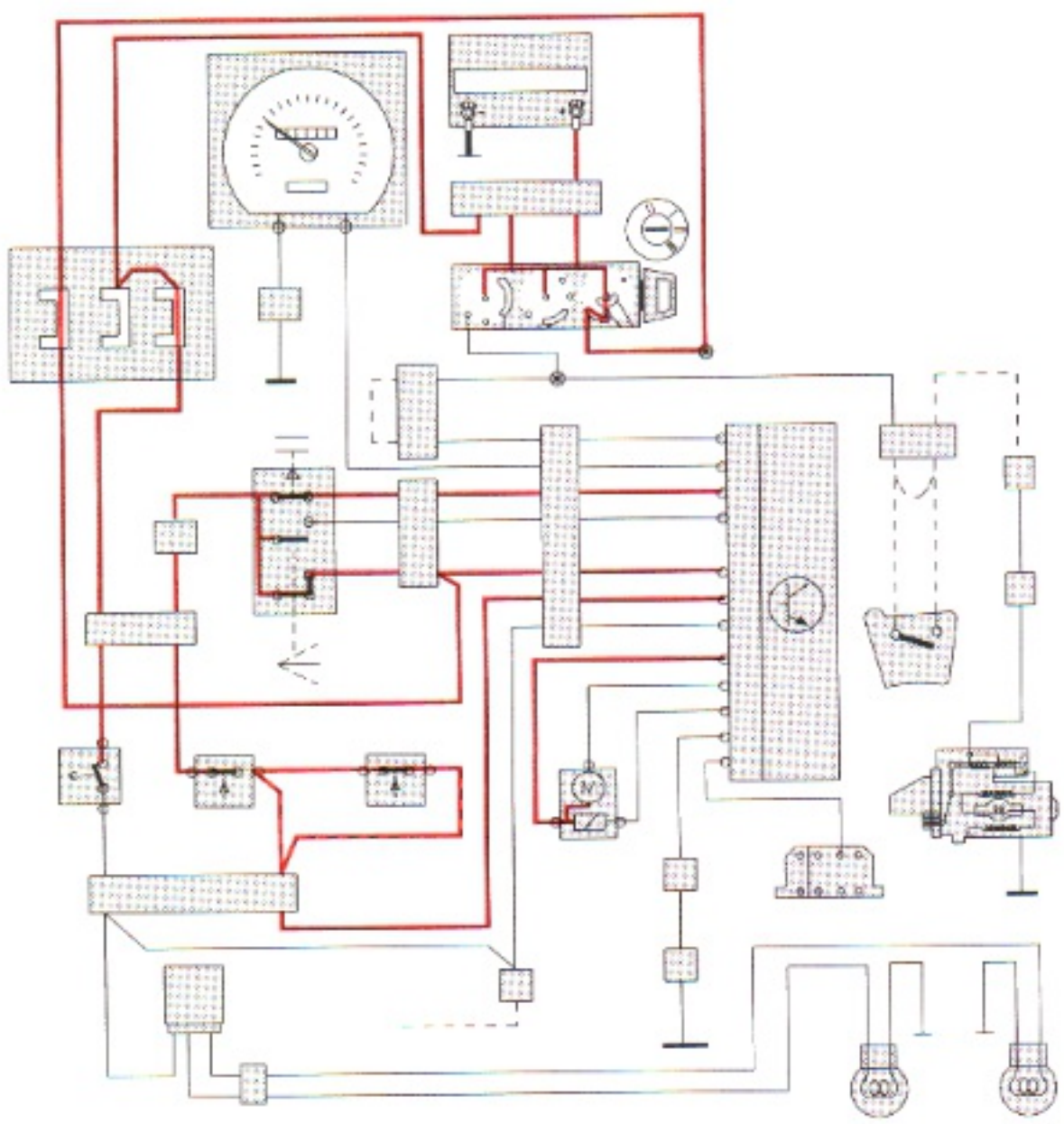

Increasing set speed

Switch set to ON.

The cruise control regulates throttle setting.

If the SET-button is held pressed for more than 0.5 seconds, the speed will slowly increase until the SET-button is released.

If the SET-button is held pressed for less than 0.5 seconds, the speed will increase by 1.6 km/h (1 mph).

Cruise control, function (schematic presentation)

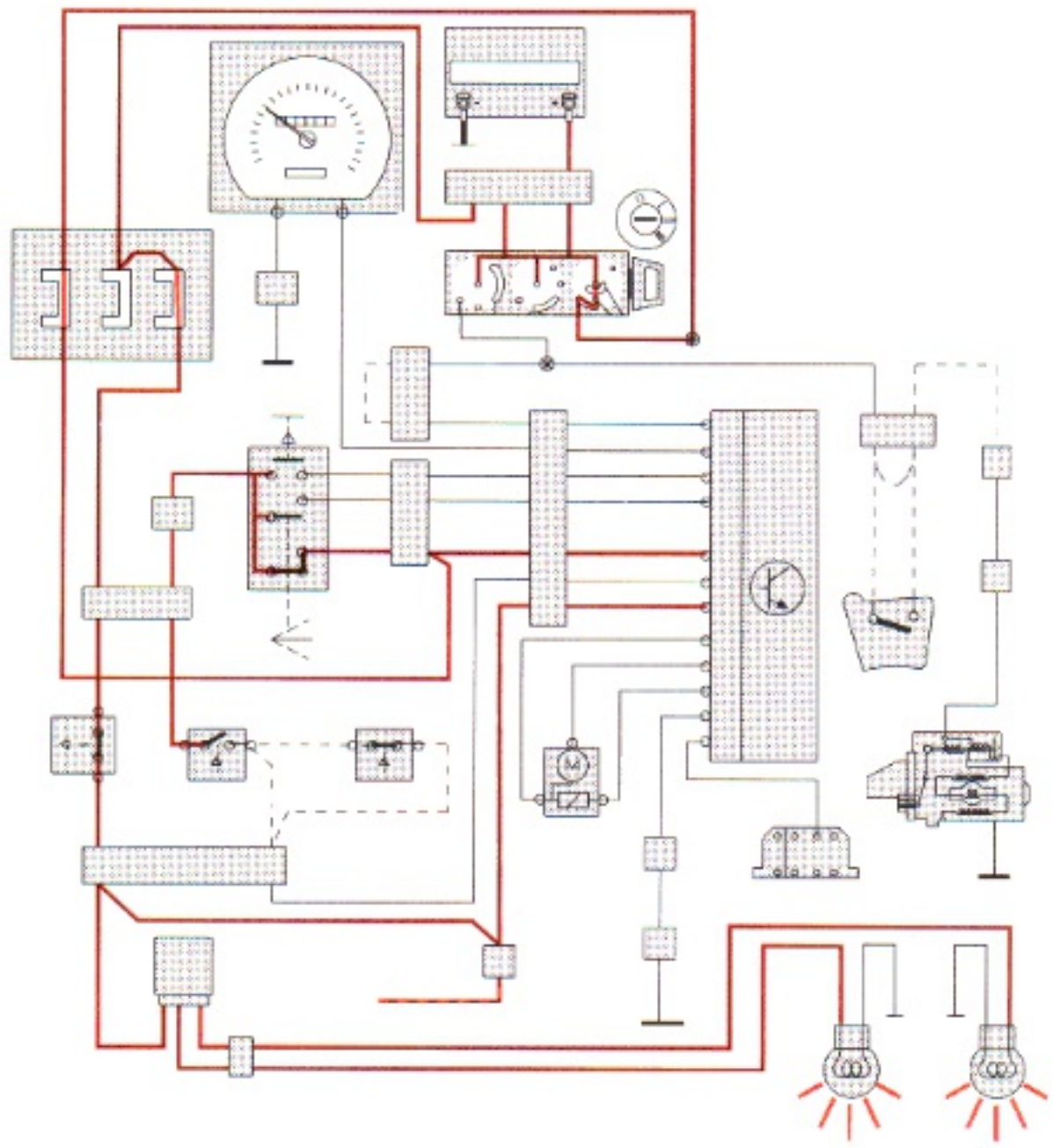

Braking

Switch set to ON.
Brake pedal pressed down.

The brake valve breaks the supply of voltage to connection 3 and the brake light switch closes, diverting battery voltage to connection 7. This disengages the cruise control.

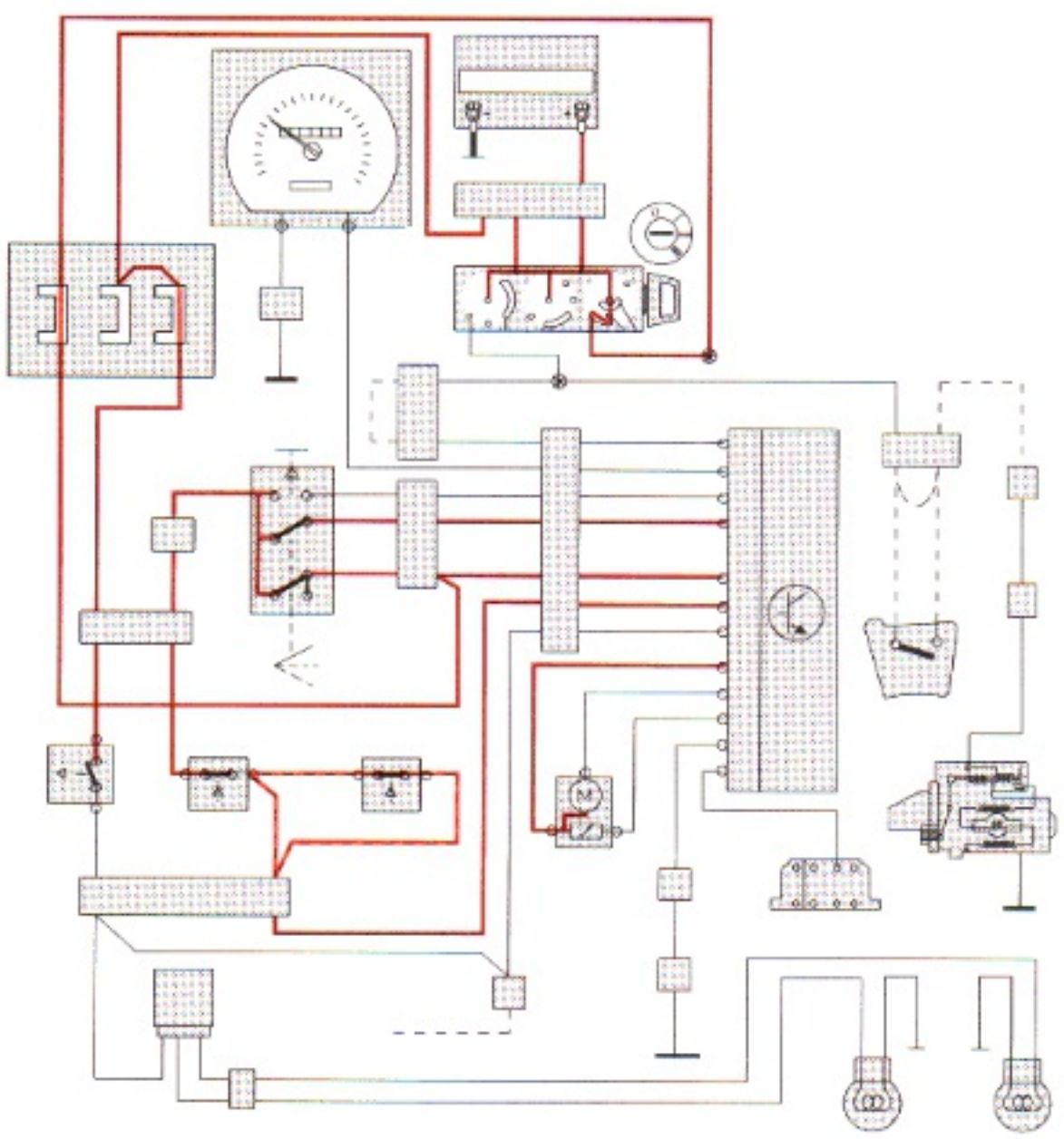

Resuming set speed

Switch set to RESUME.

The car resumes its previously set speed.

EZ 116 K Distributor ignition (DI) system (B 200 F/G, B 230 F/FB/FD/G)

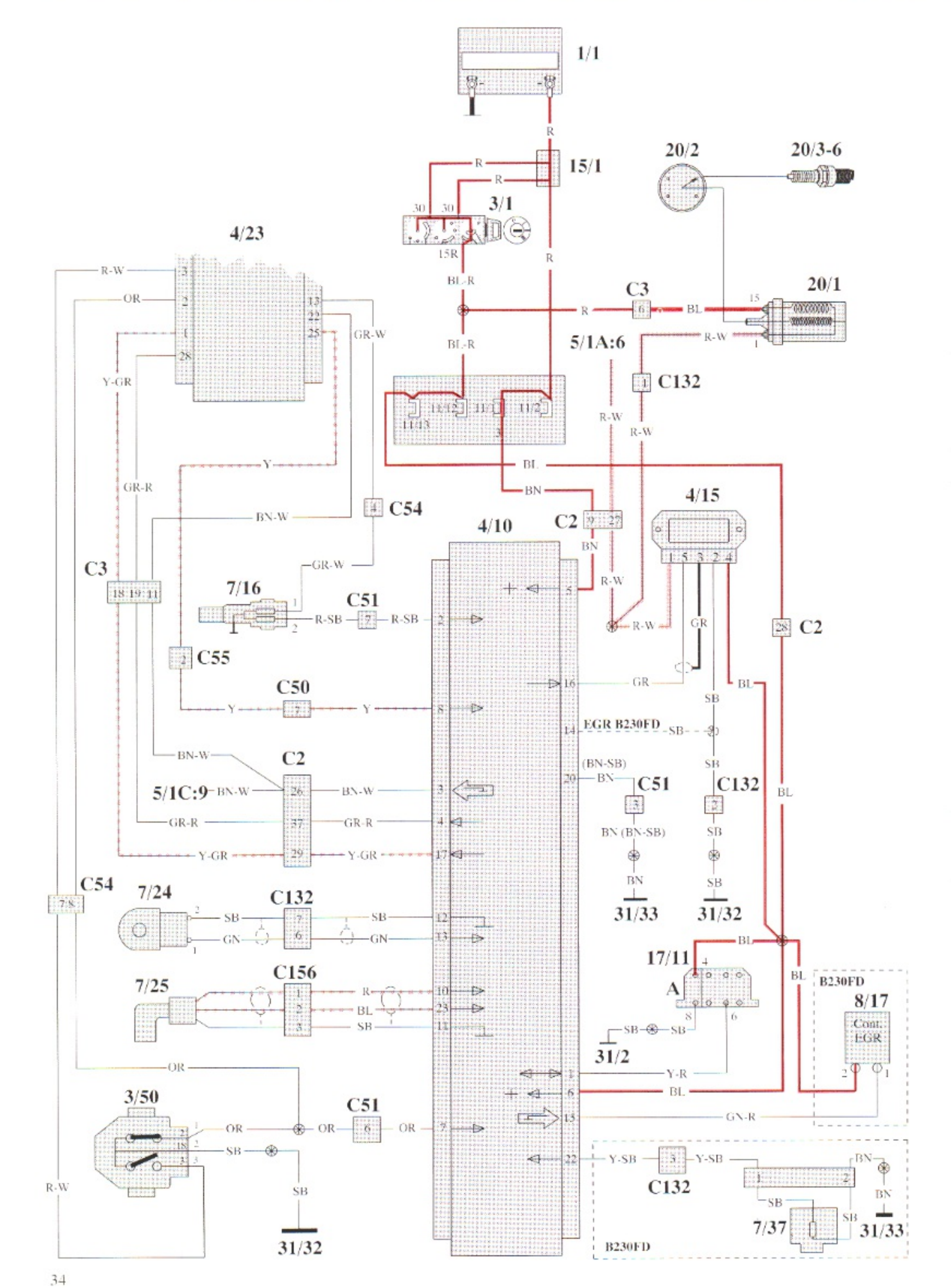

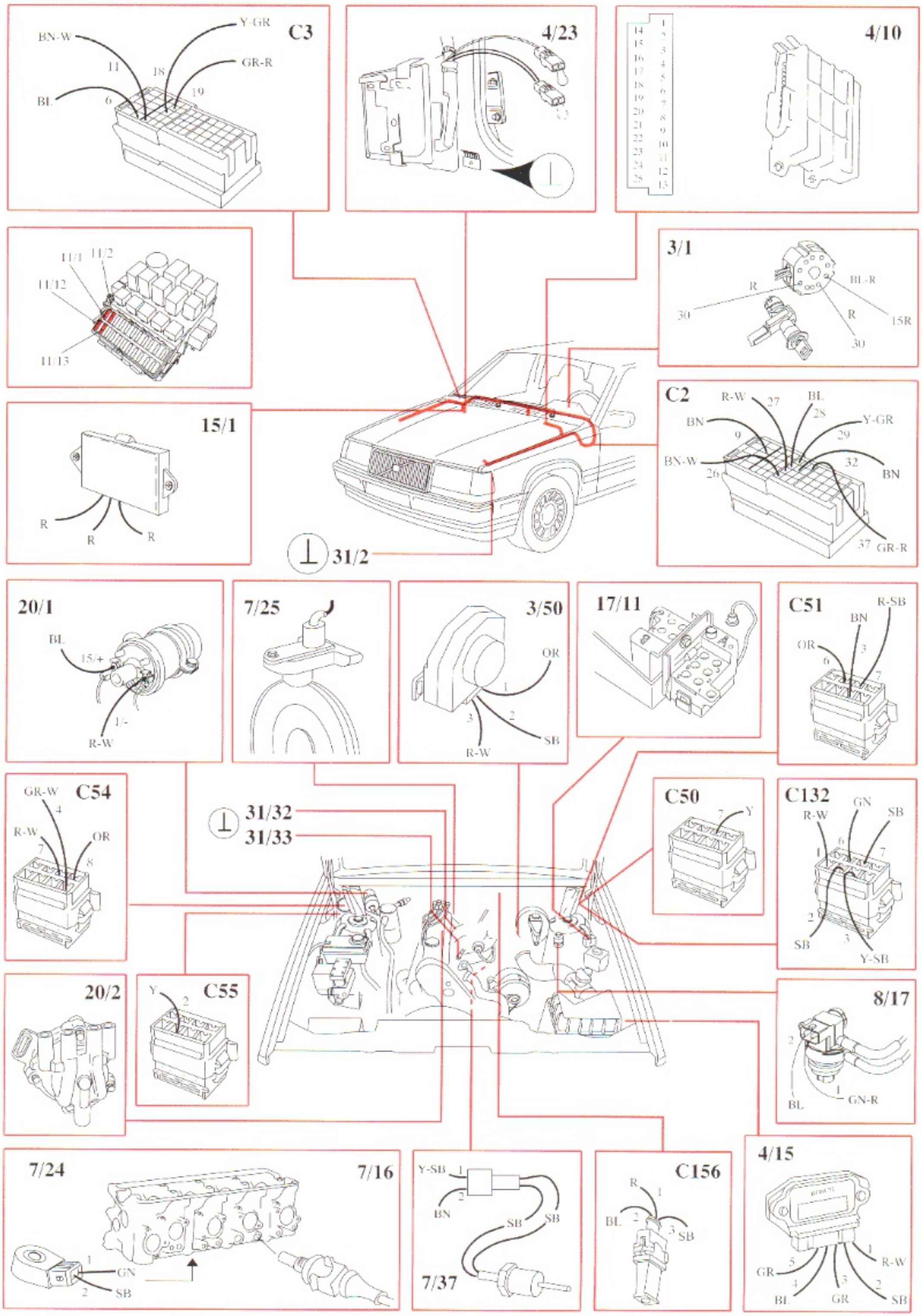
C3
BN-W
Y-GR
GR-R
BL
11
18
19
6
4/23
4/10
14
15
16
17
18
19
20
21
22
23
24
25
1
2
3
4
5
6
7
8
9
10
11
12
13
11/1
11/2
11/12
11/13
3/1
R
BL-R
30
R
15R
30
C2
R-W
27
BL
28
BN
9
Y-GR
29
BN-W
26
32
BN
37
GR-R
15/1
R
R
R
31/2
20/1
BL
15/+
1/-
R-W
7/25
3/50
OR
1
2
3
SB
R-W
17/11
C51
R-SB
BN
OR
6
3
7
C54
GR-W
4
R-W
7
OR
8
31/32
31/33
C50
7
Y
C132
R-W
GN
SB
1
6
7
2
3
SB
Y-SB
20/2
C55
Y
2
8/17
2
1
BL
GN-R
7/24
7/16
1
GN
2
SB
Y-SB
1
2
BN
SB
SB
7/37
C156
R
1
BL
2
3
SB
4/15
R-W
GR
5
4
BL
3
GR
2
SB

EZ 116 K Distributor ignition (DI) system (B 200 FT, B 230 FT/GT)

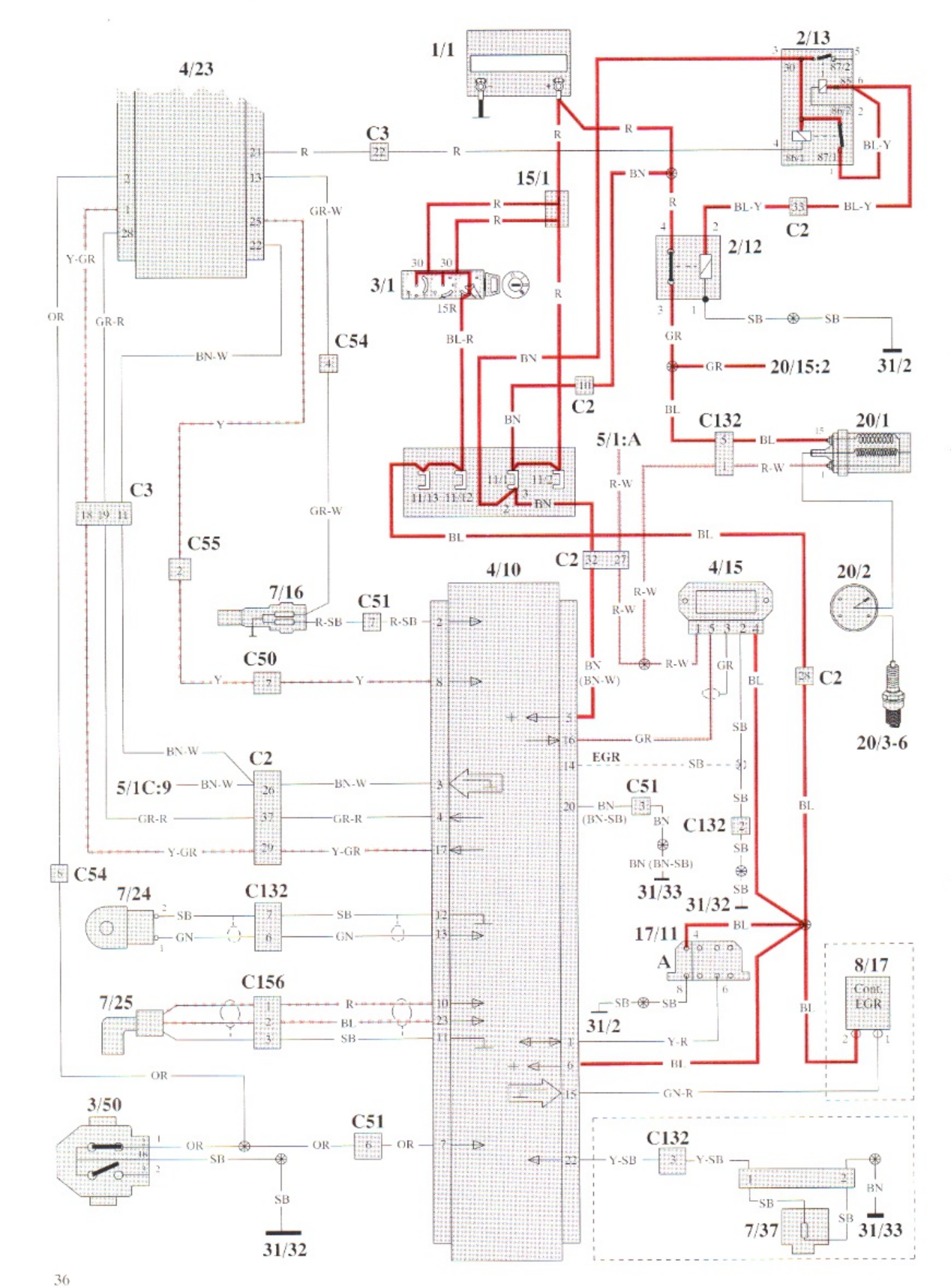

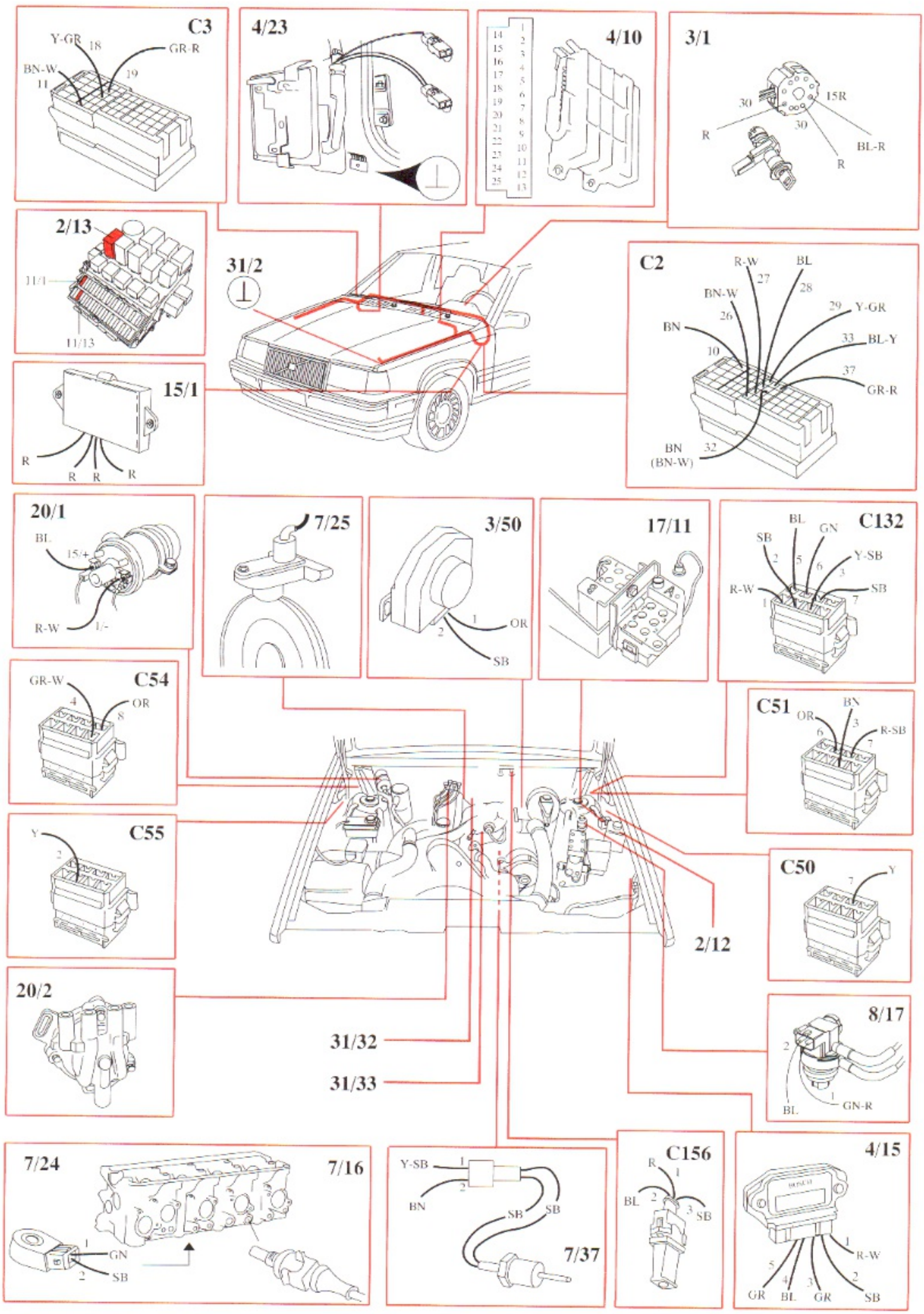
C3
Y-GR
18
GR-R
BN-W
11
19
4/23
4/10
14
15
16
17
18
19
20
21
22
23
24
25
1
2
3
4
5
6
7
8
9
10
11
12
13
3/1
30
15R
30
R
BL-R
R
2/13
11/1
11/13
31/2
C2
R-W
BL
27
28
BN-W
26
29
Y-GR
BN
33
BL-Y
10
37
GR-R
BN
(BN-W)
32
15/1
R
R
R
R
20/1
BL
15/+
R-W
1/-
7/25
3/50
1
OR
2
SB
17/11
C132
BL
GN
SB
2
5
6
Y-SB
3
R-W
SB
1
7
C54
GR-W
4
OR
8
C51
OR
BN
6
3
R-SB
7
C55
Y
2
2/12
C50
7
Y
20/2
31/32
31/33
8/17
2
1
BL
GN-R
7/24
7/16
1
GN
2
SB
Y-SB
1
2
BN
SB
SB
7/37
C156
R
1
BL
2
3
SB
4/15
R-W
1
5
4
3
2
GR
BL
GR
SB

REX-I Distributor ignition (DI) system (B 230 F)

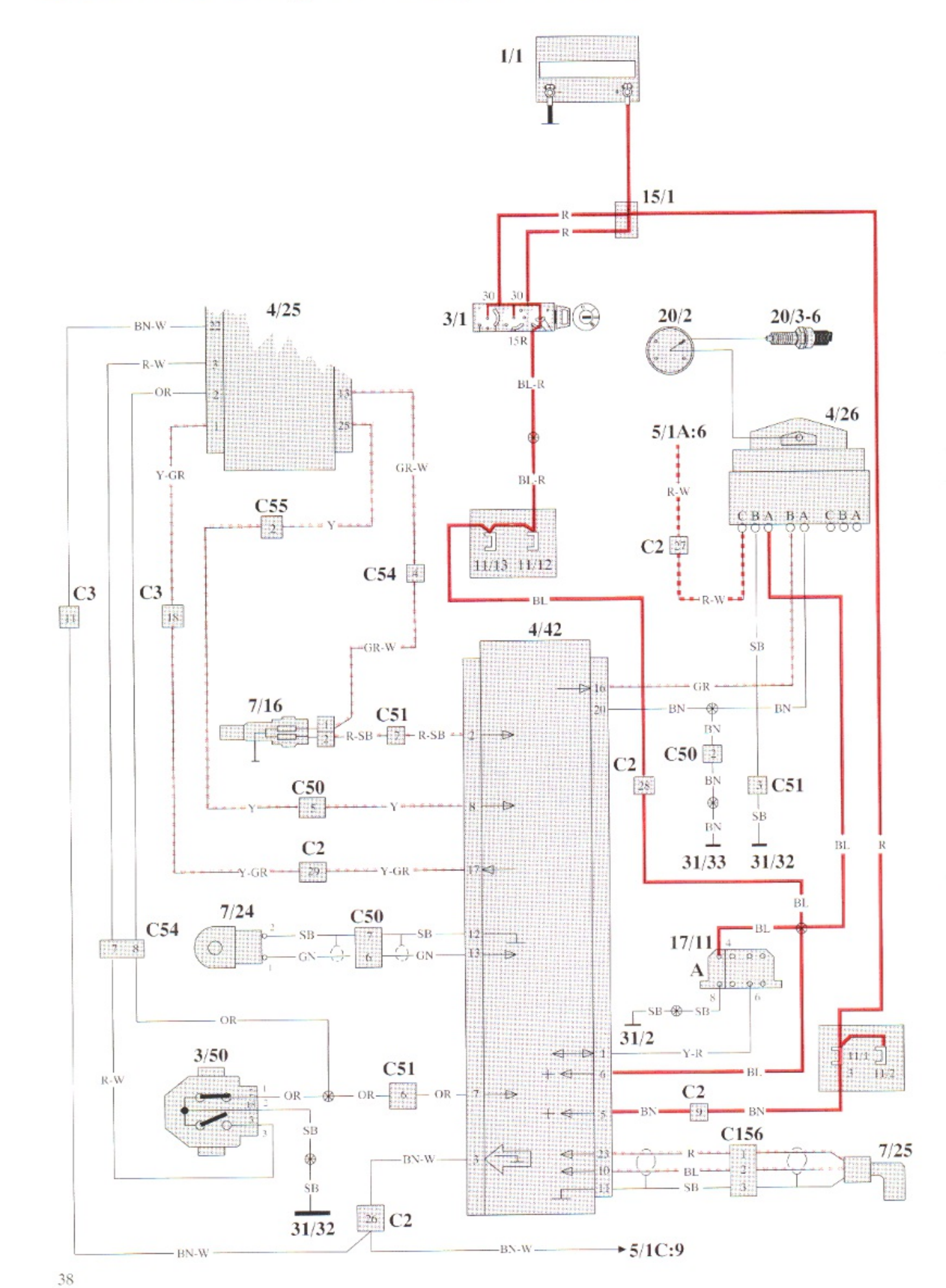

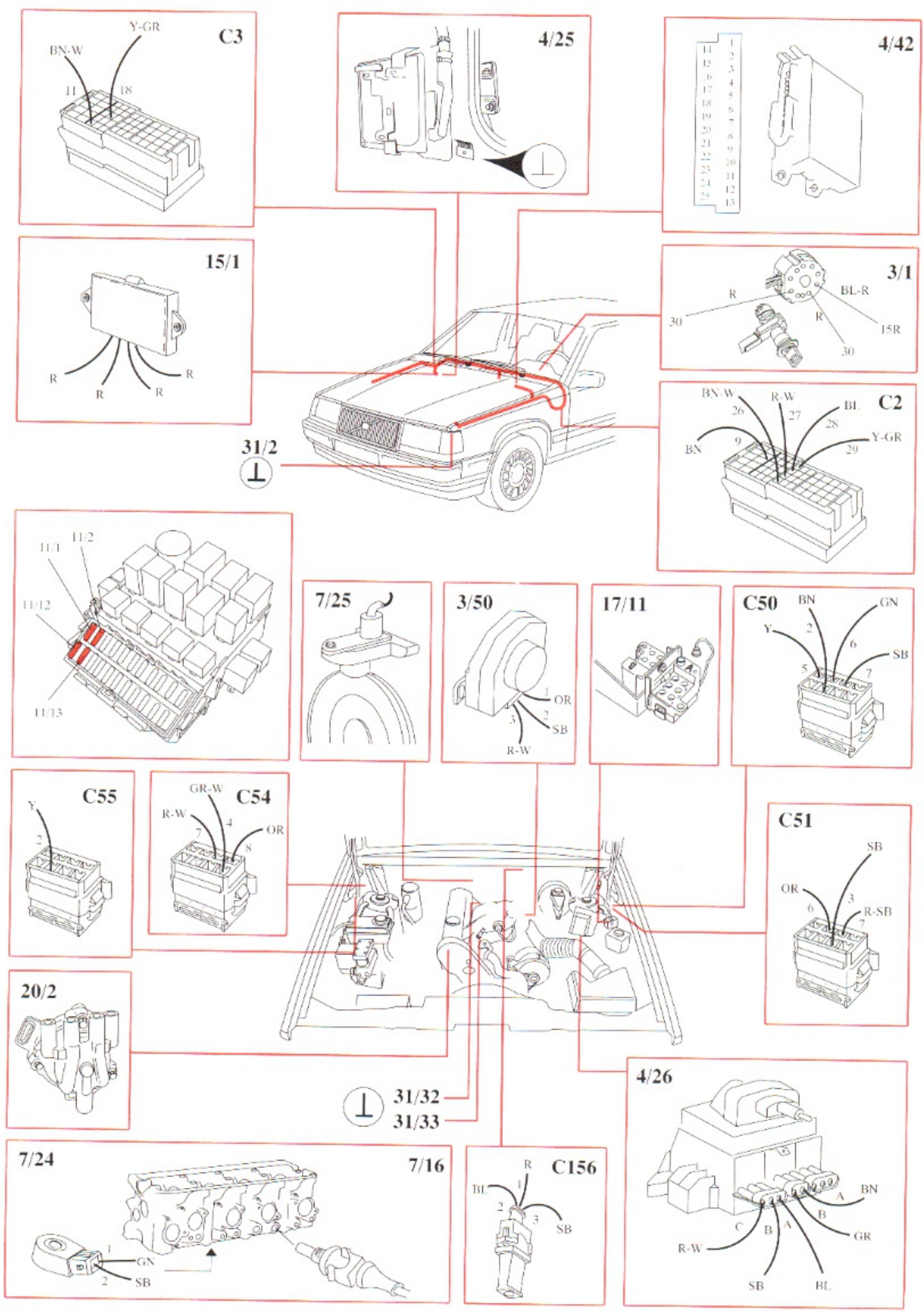
C3
Y-GR
BN-W
11
18
4/25
4/42
15/1
R
R
R
R
3/1
R
BL-R
30
R
15R
30
C2
BN-W
R-W
BL
26
27
28
BN
9
Y-GR
29
31/2
11/1
11/2
11/12
11/13
7/25
3/50
OR
2
SB
3
R-W
17/11
C50
BN
GN
Y
2
6
SB
5
7
C55
Y
2
C54
GR-W
R-W
4
OR
7
8
C51
SB
OR
6
3
R-SB
7
20/2
31/32
31/33
4/26
A
BN
B
GR
C
B
A
R-W
SB
BL
7/24
7/16
1
GN
2
SB
C156
R
BL
1
2
3
SB

Power supply

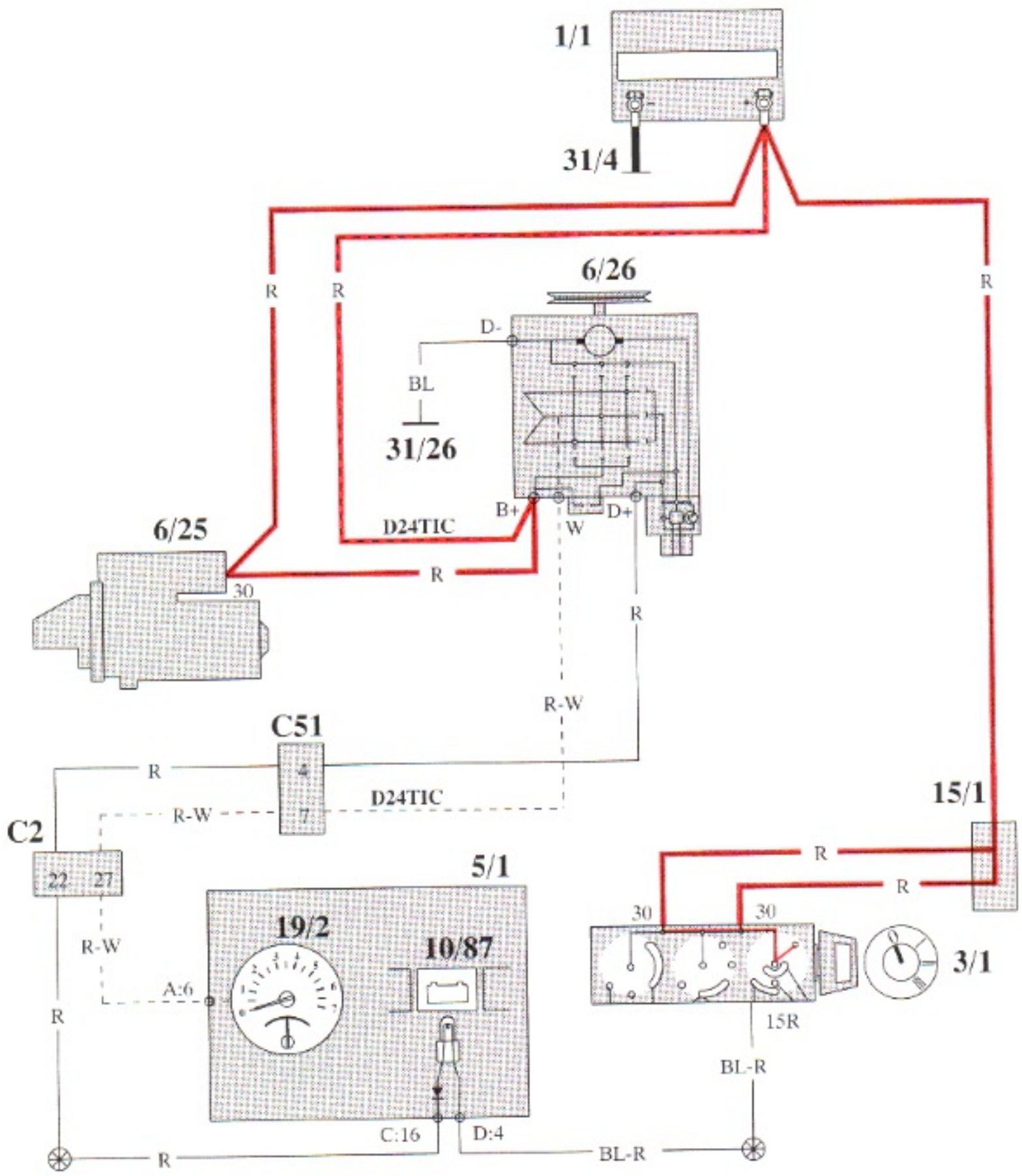

Ignition switched ON
(engine not running)

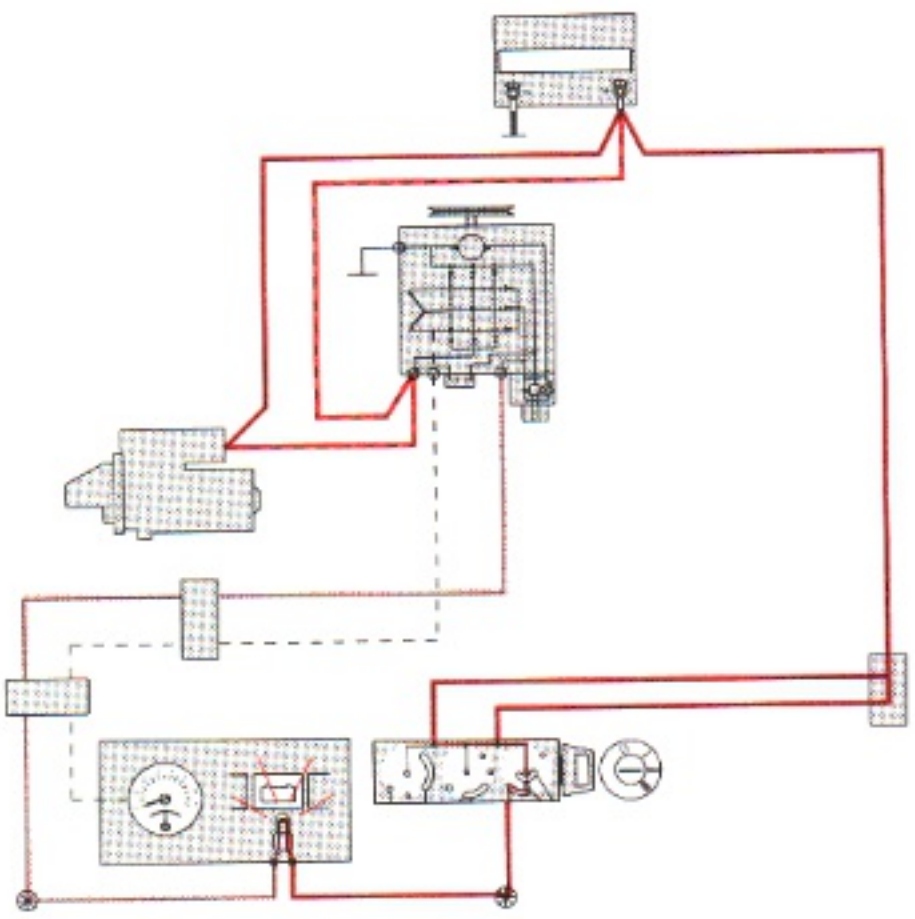

Generator charging

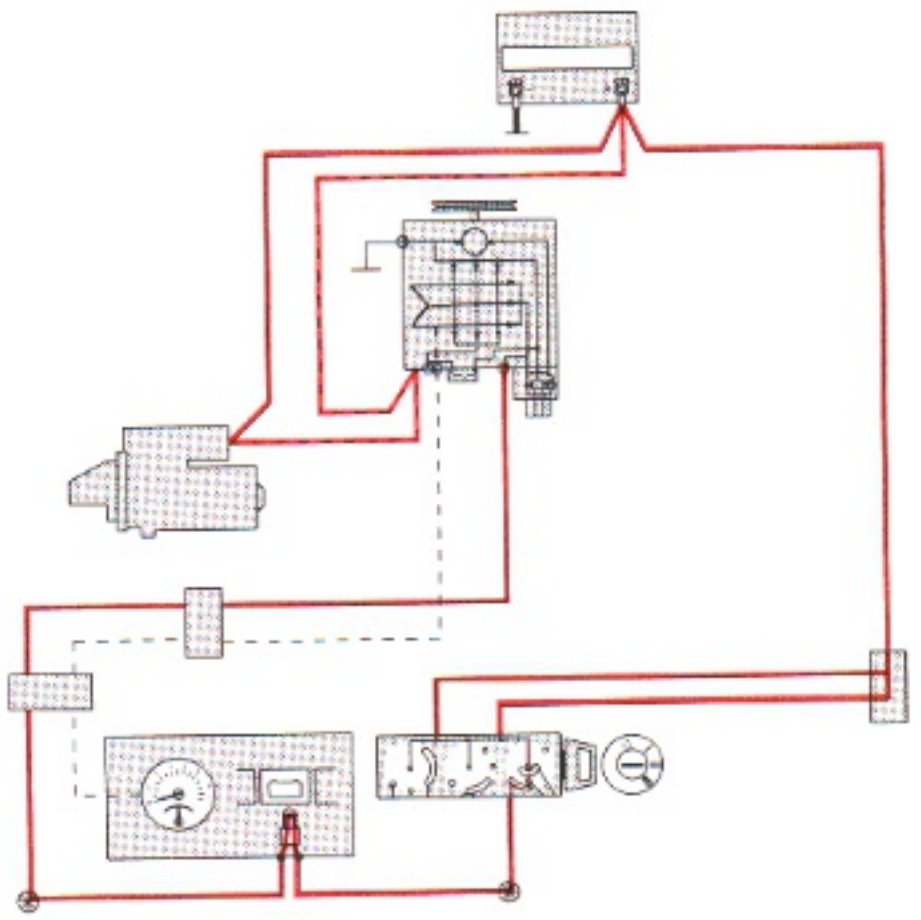

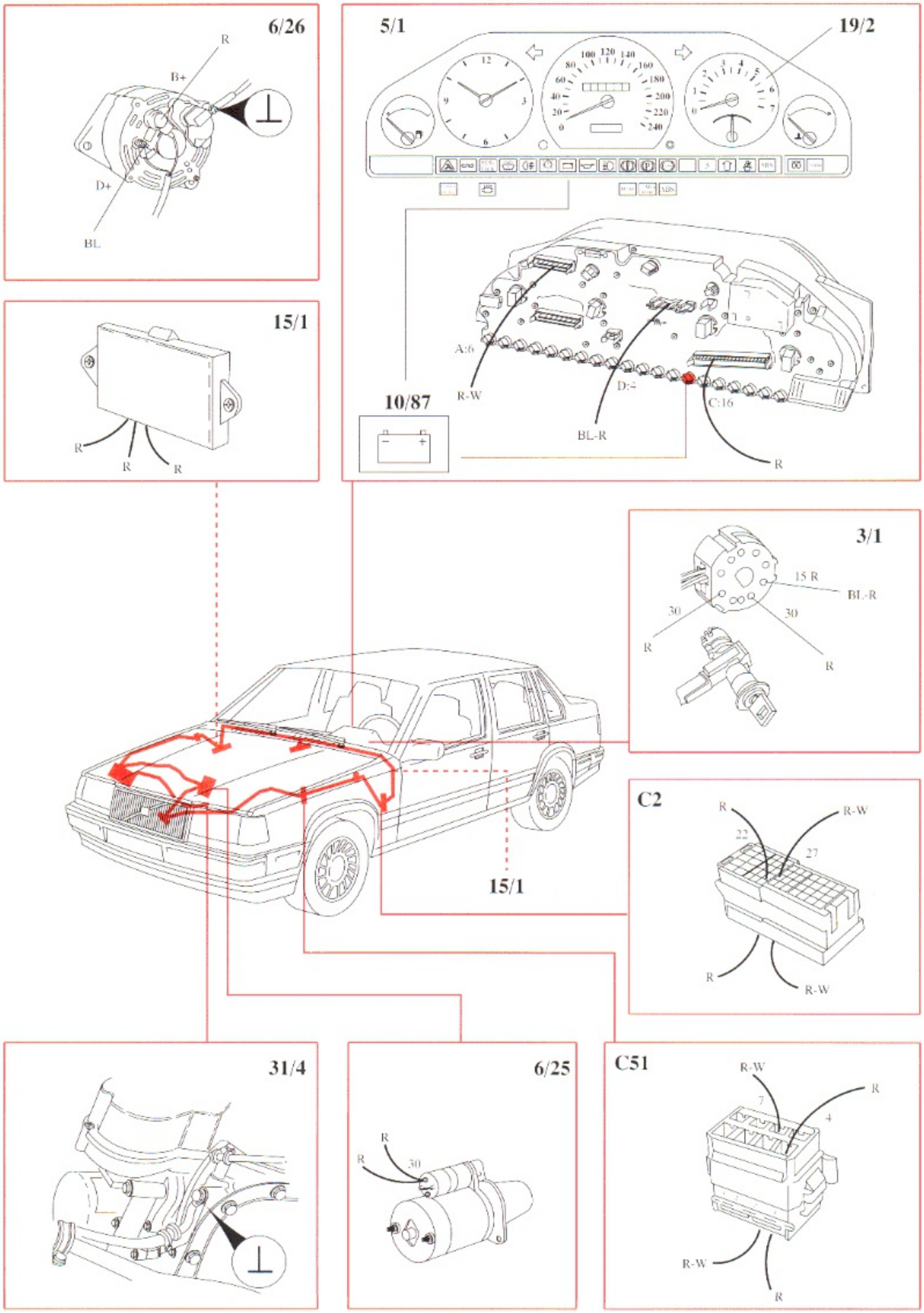
6/26
R
B+
D+
BL
5/1
19/2
A:6
R-W
D:4
BL-R
C:16
R
10/87
15/1
R
R
R
3/1
15 R
BL-R
30
30
R
R
15/1
C2
R
R-W
22
27
R
R-W
31/4
6/25
R
R
30
C51
R-W
R
7
4
R-W
R

Starter system

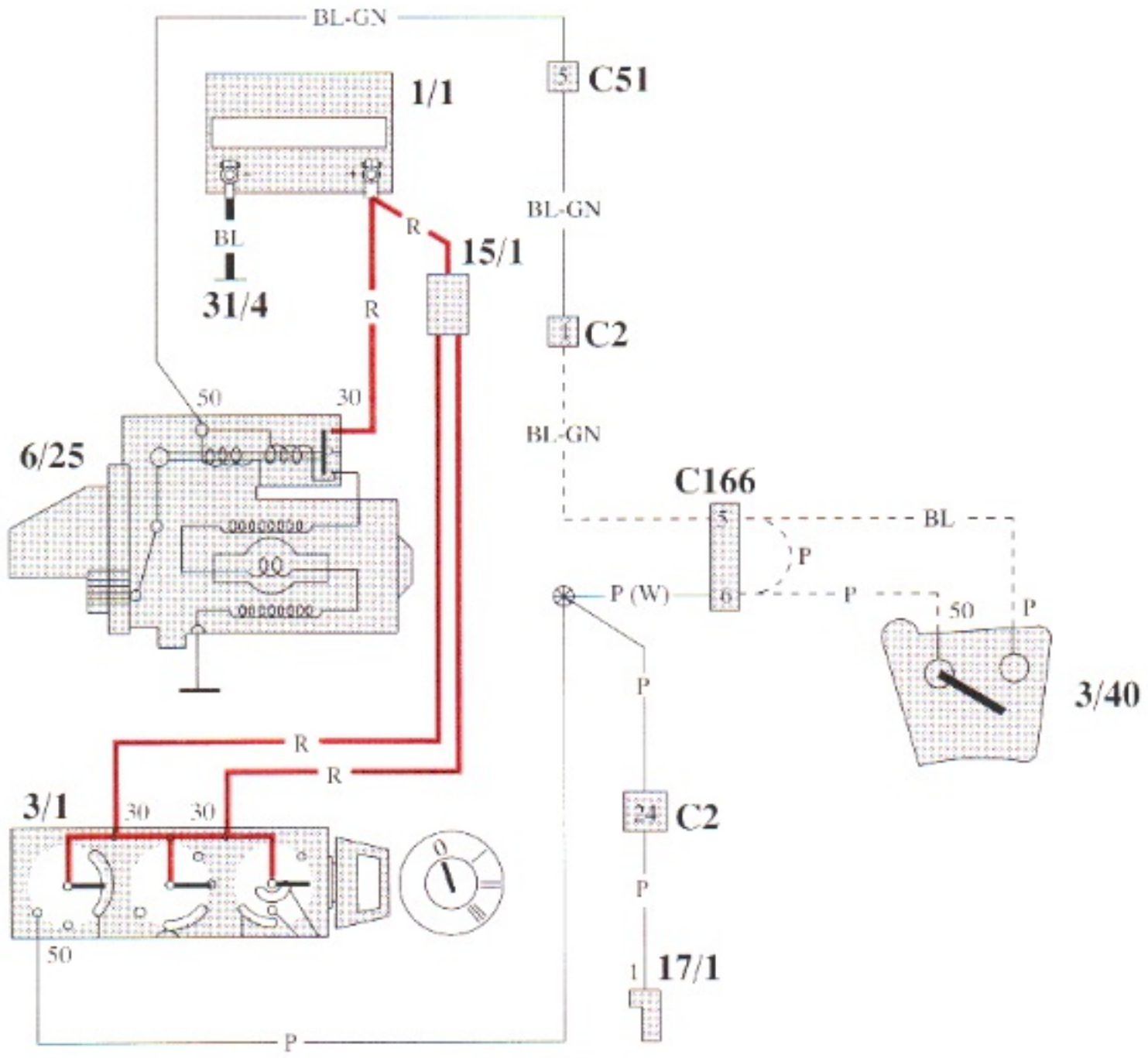

Control solenoid engages pinion in ring gear

Pinion engaged, connections closed and starter motor operates

On vehicles with automatic transmission, the start inhibit switch, 3/40, must be closed for the starter motor to be energized

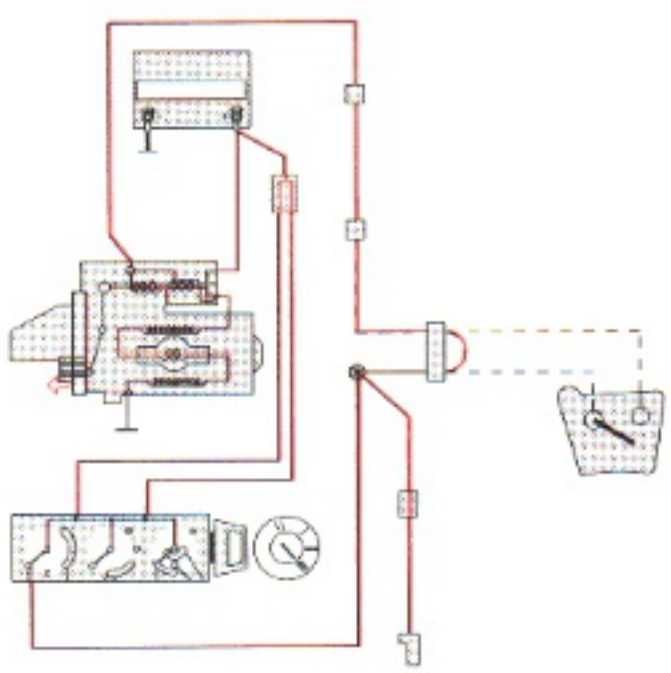

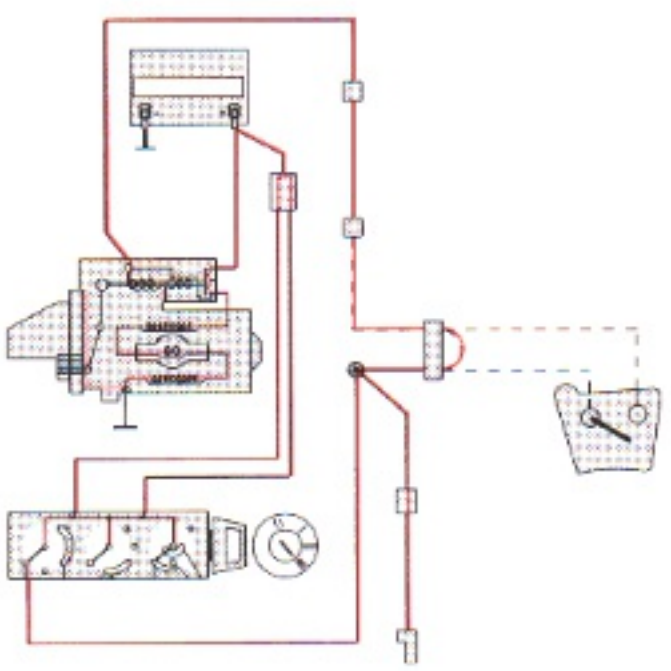

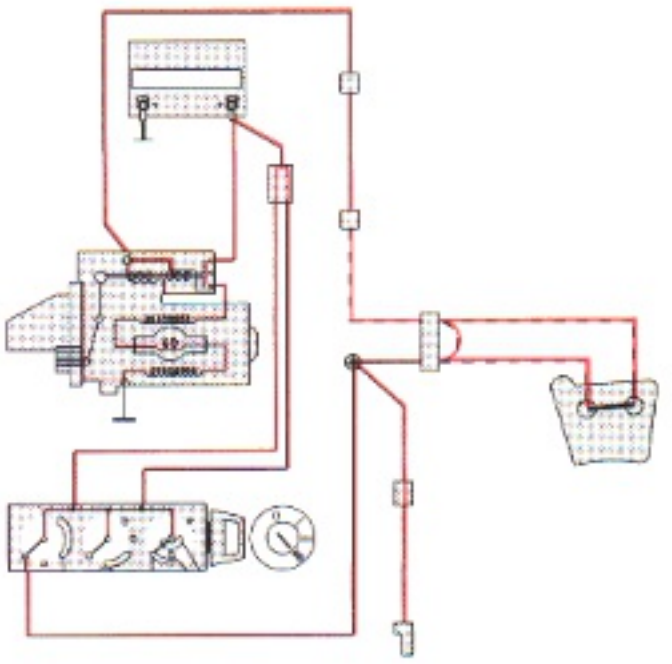

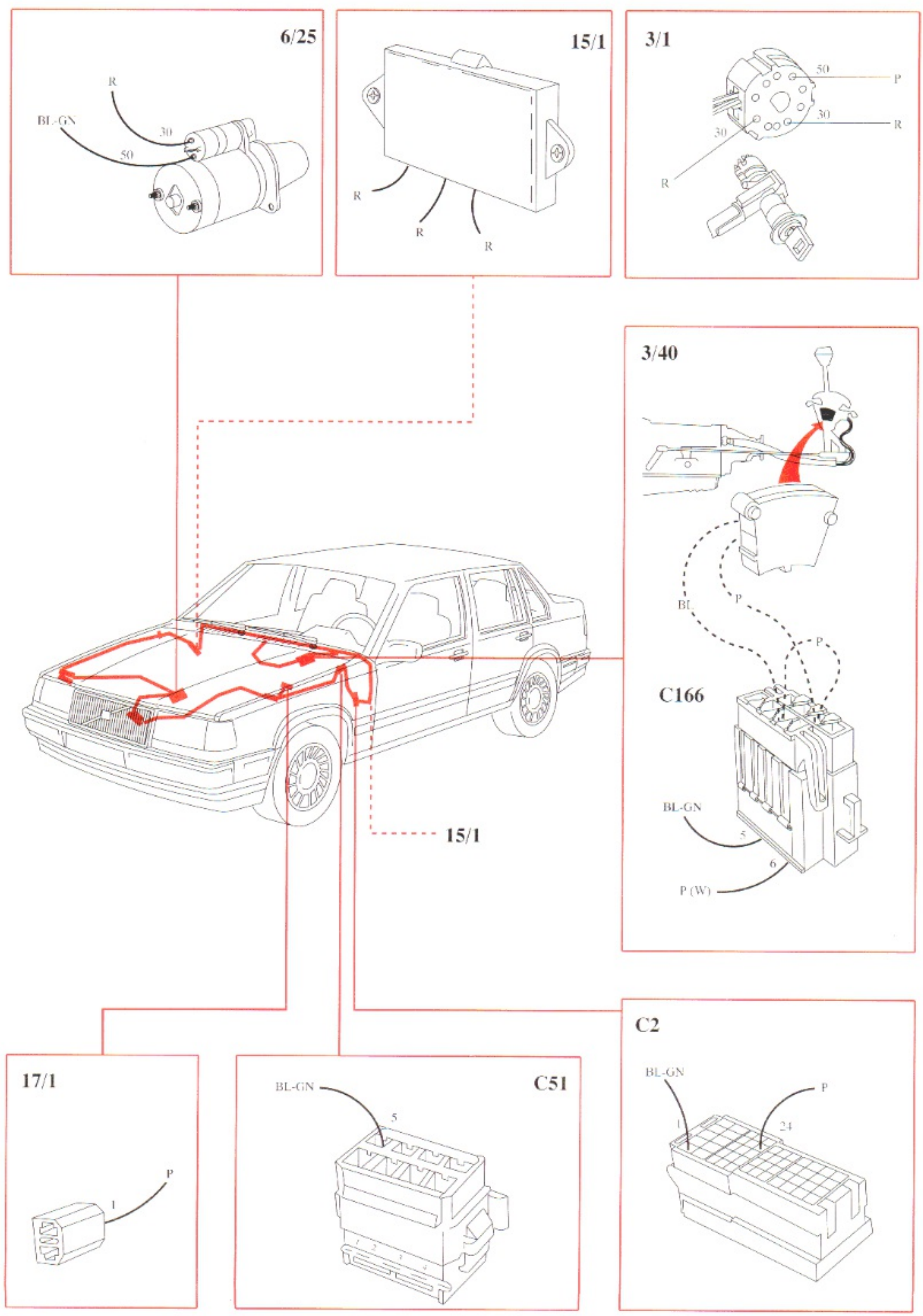
6/25
R
BL-GN
30
50
15/1
R
R
R
3/1
50
P
30
R
30
R
3/40
BL
P
P
C166
BL-GN
5
6
P (W)
15/1
17/1
P
1
C51
BL-GN
5
C2
BL-GN
P
1
24

Diesel preheating, overload protector and EGR (D 24 TIC)

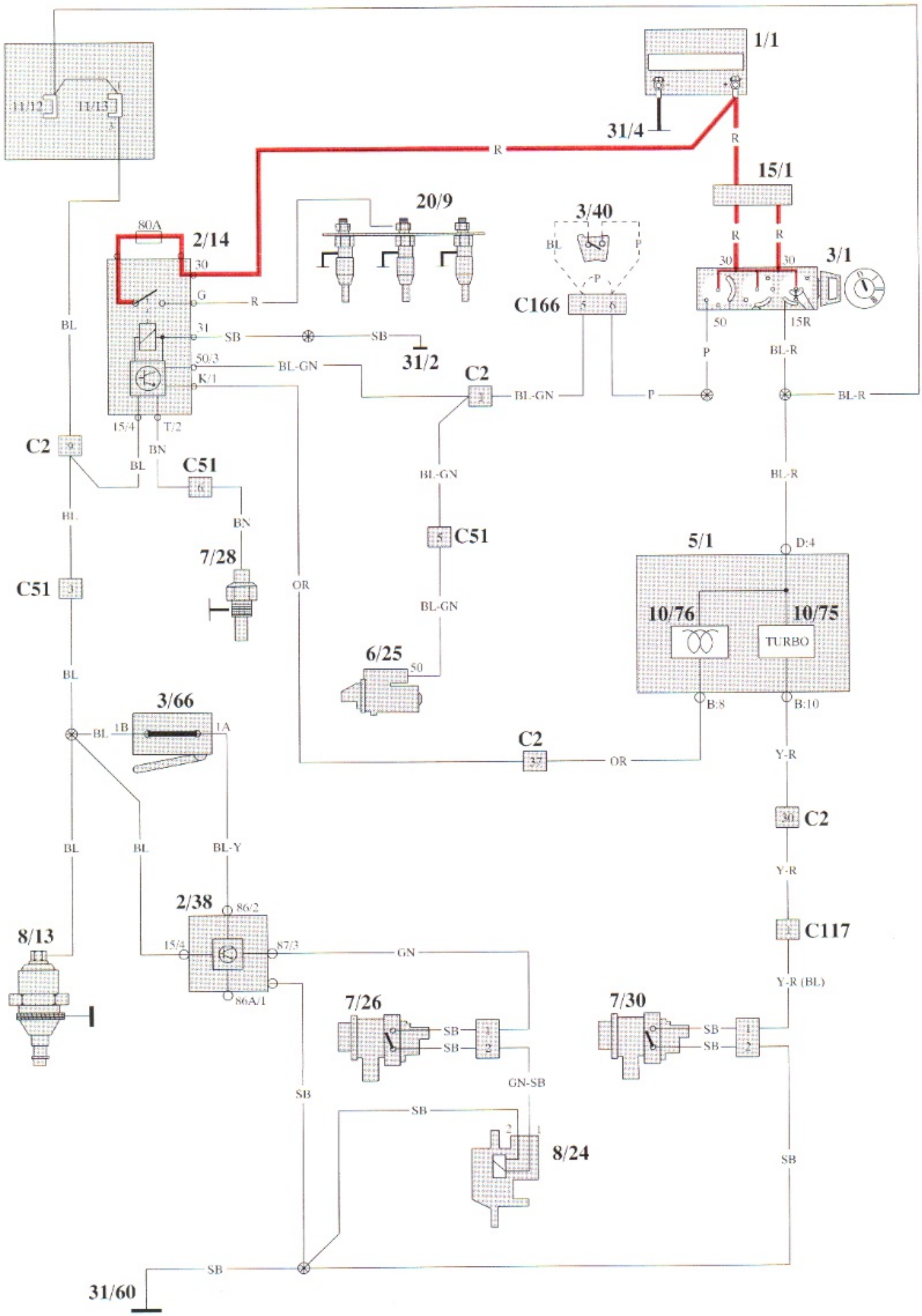

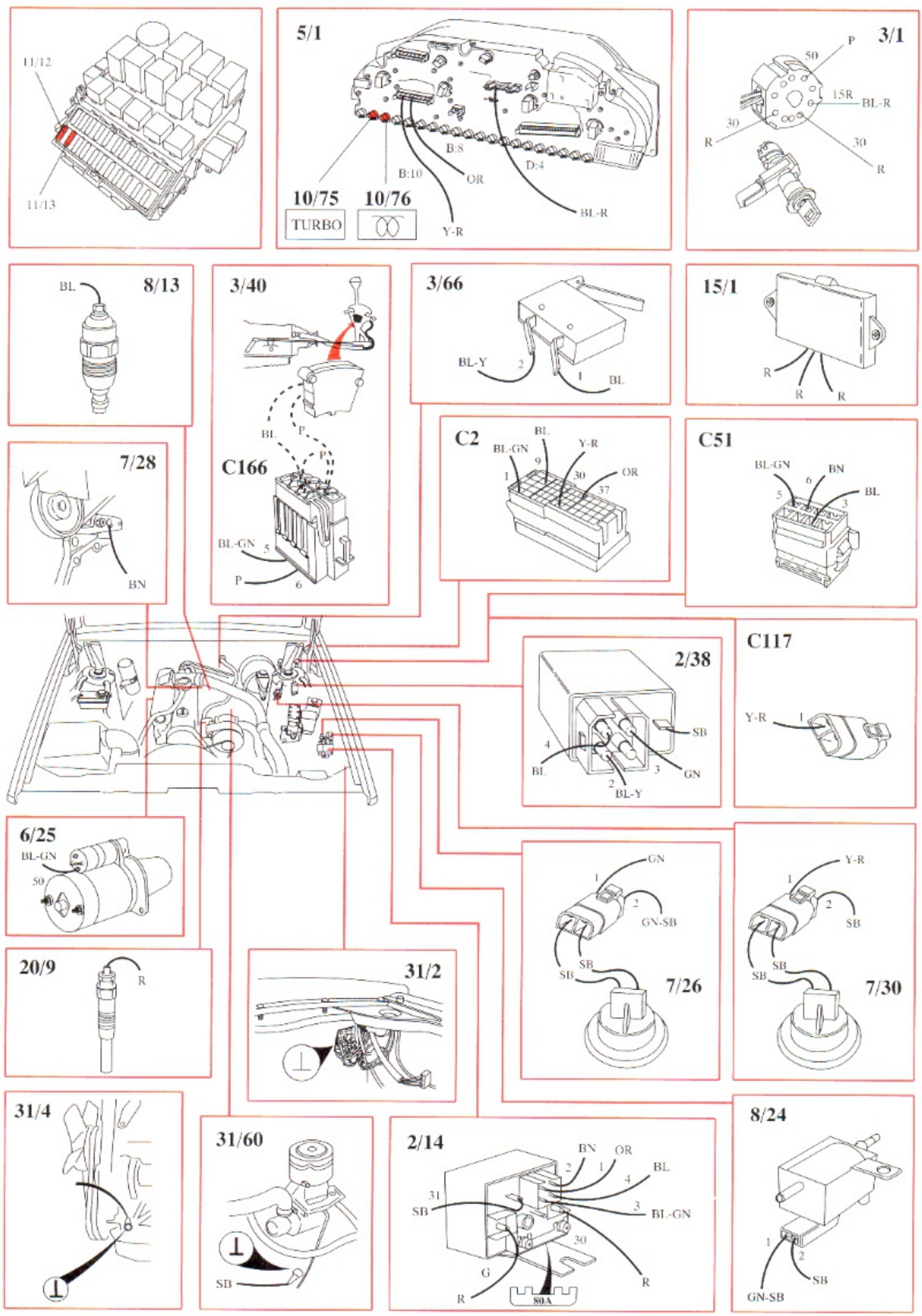
11/12
11/13
5/1
10/75
TURBO
10/76
B:10
B:8
OR
Y-R
D:4
BL-R
3/1
P
50
15R
BL-R
30
R
30
R
8/13
BL
3/40
BL
P
P
C166
BL-GN
5
P
6
3/66
BL-Y
2
1
BL
15/1
R
R
R
7/28
BN
C2
BL-GN
BL
Y-R
9
1
30
OR
37
C51
BL-GN
BN
6
5
BL
3
C117
Y-R
1
2/38
SB
4
BL
3
GN
2
BL-Y
6/25
BL-GN
50
GN
1
2
GN-SB
SB
SB
7/26
Y-R
1
2
SB
SB
SB
7/30
20/9
R
31/2
31/4
31/60
SB
2/14
BN
OR
2
1
BL
4
31
SB
3
BL-GN
30
G
R
R
80A
8/24
1
2
SB
GN-SB

High and low beam

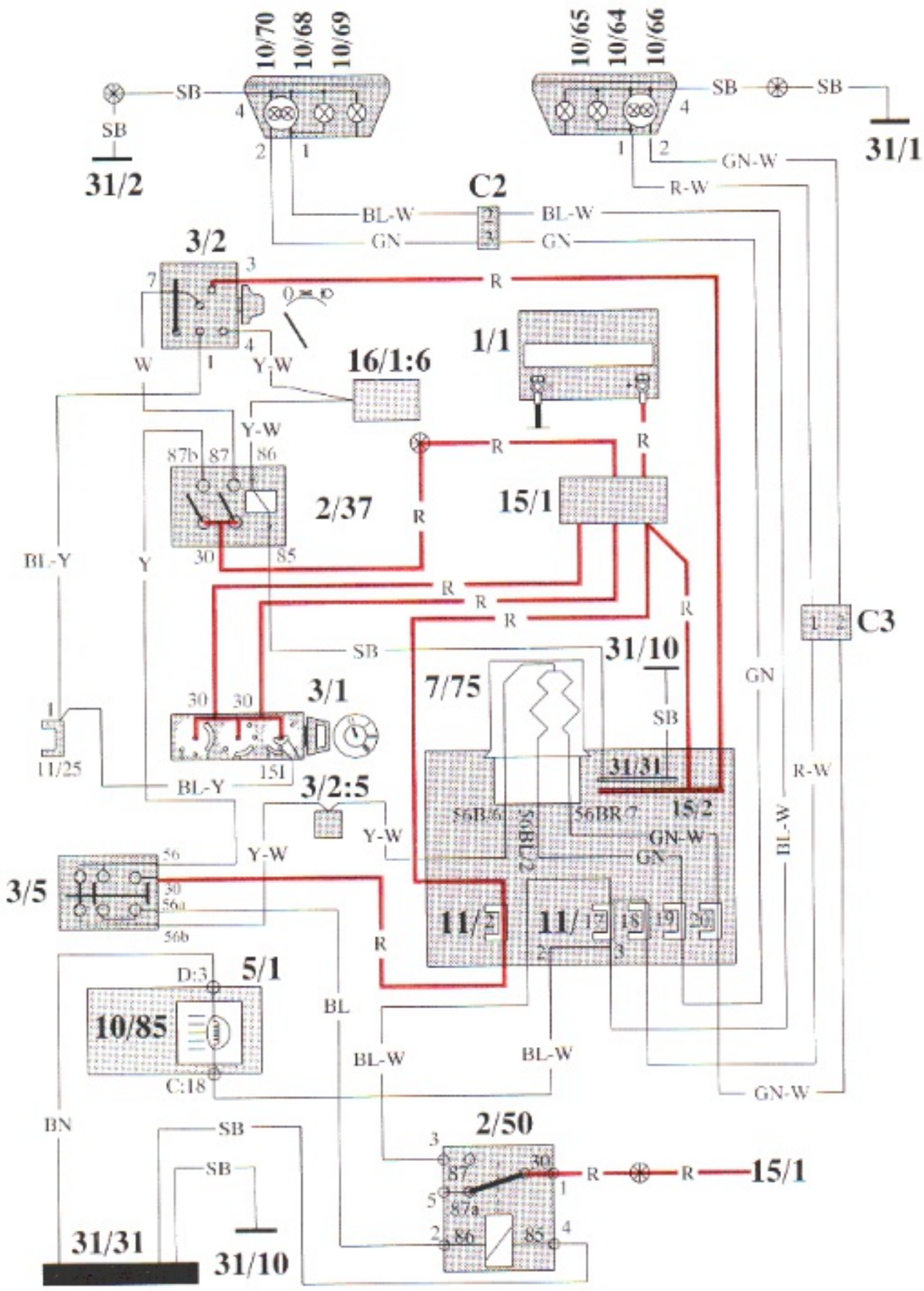

High beam

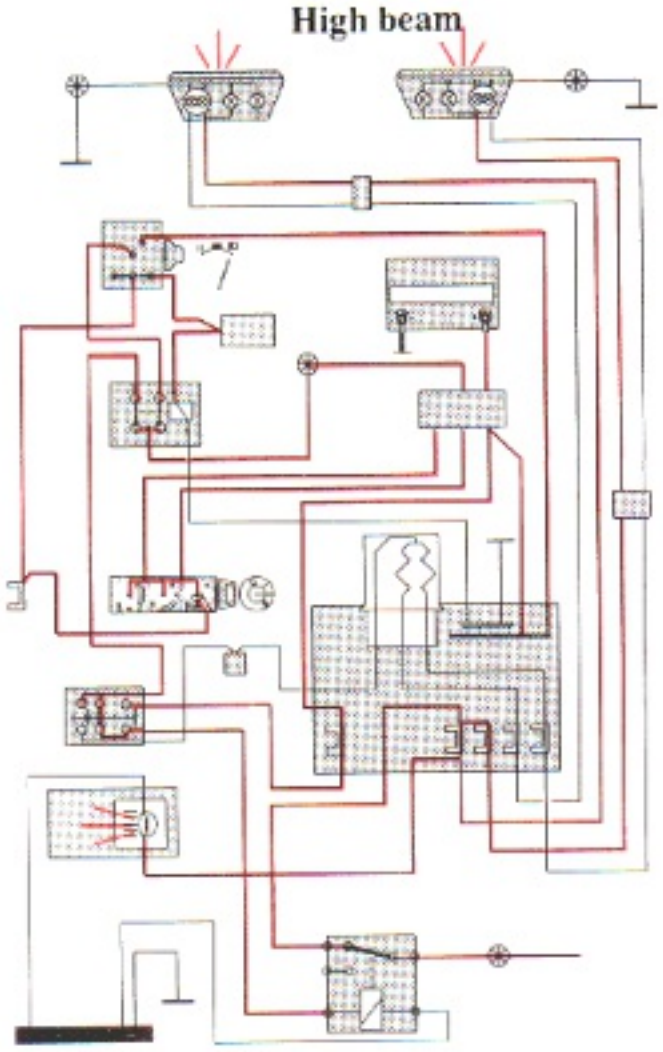

Low beam

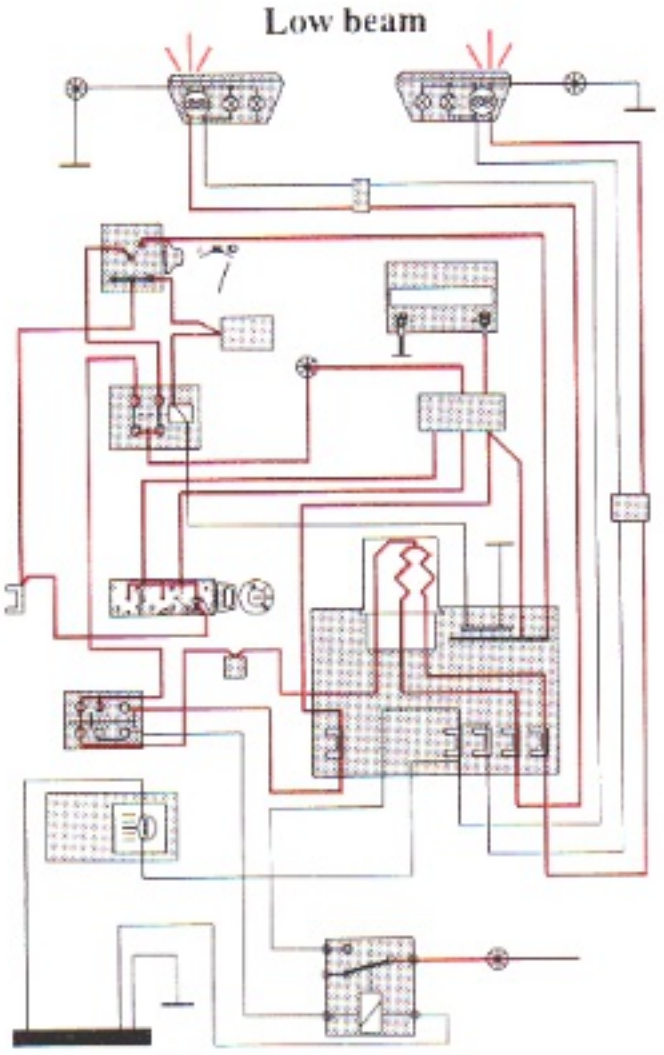

Headlight flasher

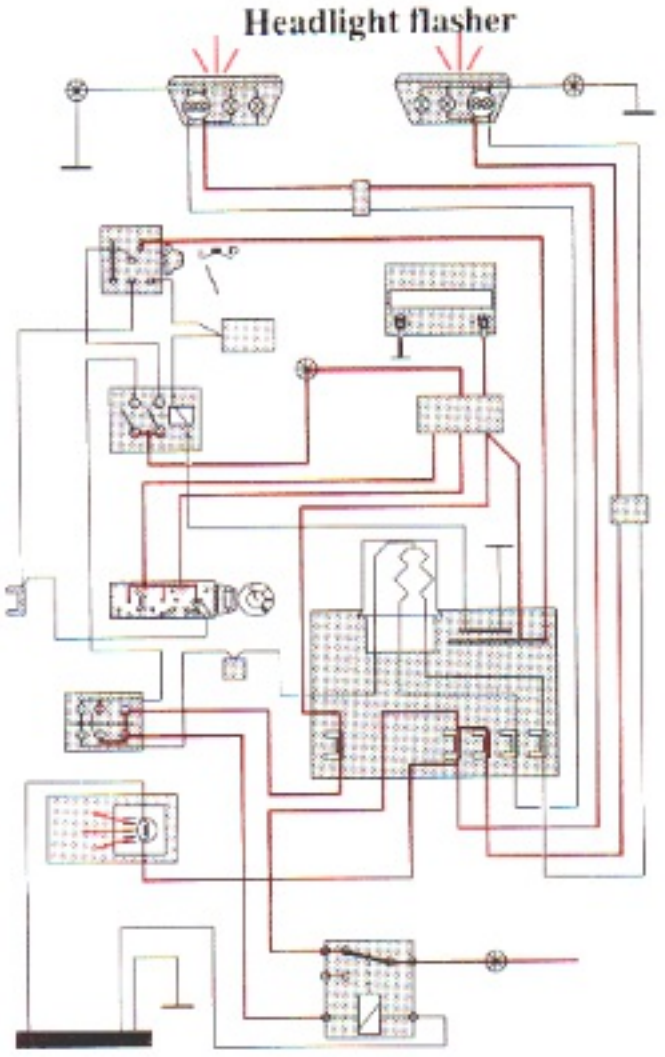

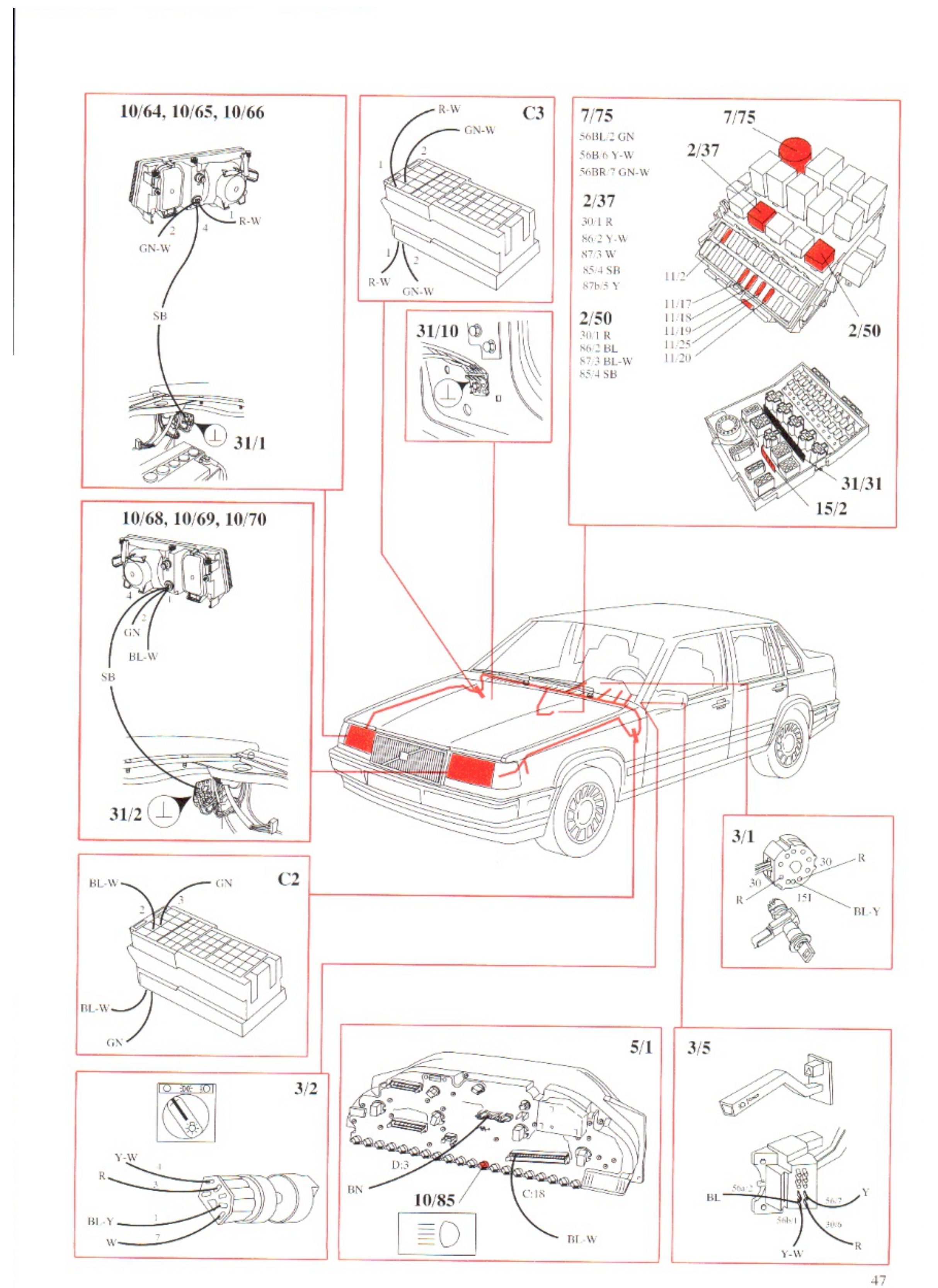
10/64, 10/65, 10/66
R-W
GN-W
SB
31/1
C3
R-W
GN-W
31/10
7/75
56BL/2 GN
56B/6 Y-W
56BR/7 GN-W
2/37
30/1 R
86/2 Y-W
87/3 W
85/4 SB
87b/5 Y
2/50
30/1 R
86/2 BL
87/3 BL-W
85/4 SB
7/75
2/37
11/2
11/17
11/18
11/19
11/25
11/20
2/50
31/31
15/2
10/68, 10/69, 10/70
GN
BL-W
SB
31/2
C2
BL-W
GN
BL-W
GN
3/1
30
R
30
R
151
BL-Y
3/2
Y-W
R
BL-Y
W
5/1
D:3
BN
10/85
C:18
BL-W
3/5
BL
Y
Y-W
R

High and low beam, Nordic region, Netherlands, Belgium

Automatic low beam with ignition lock (3/1) in position II and light switch (3/2) in position 0 (can be disconnected if fuse no. 25 is removed)

High beam

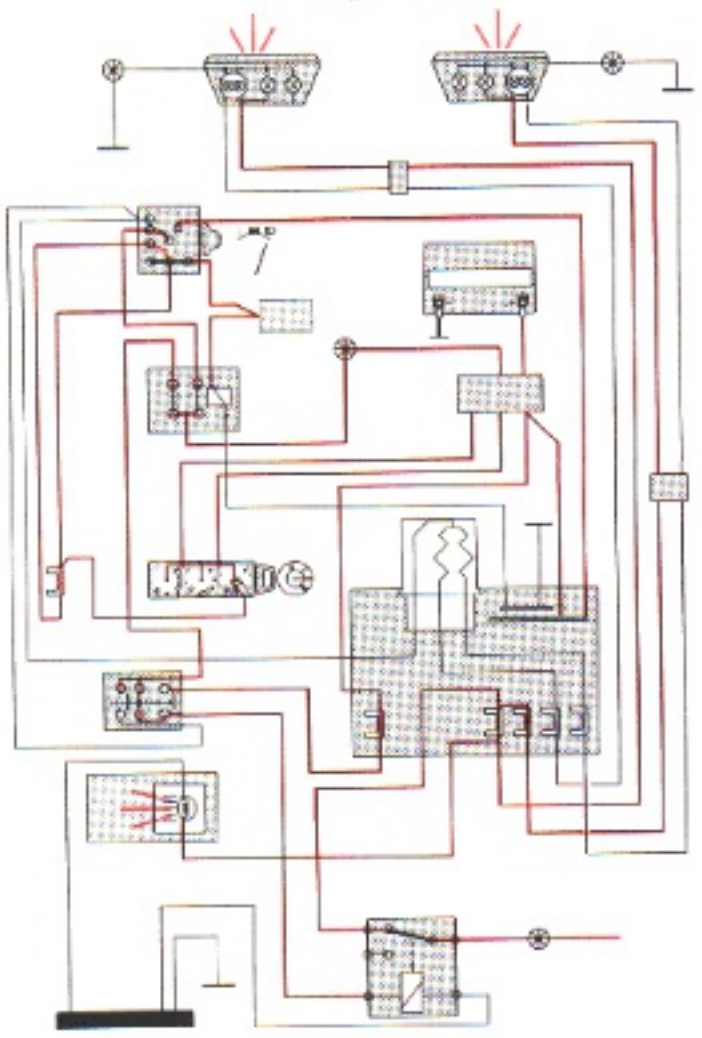

Low beam

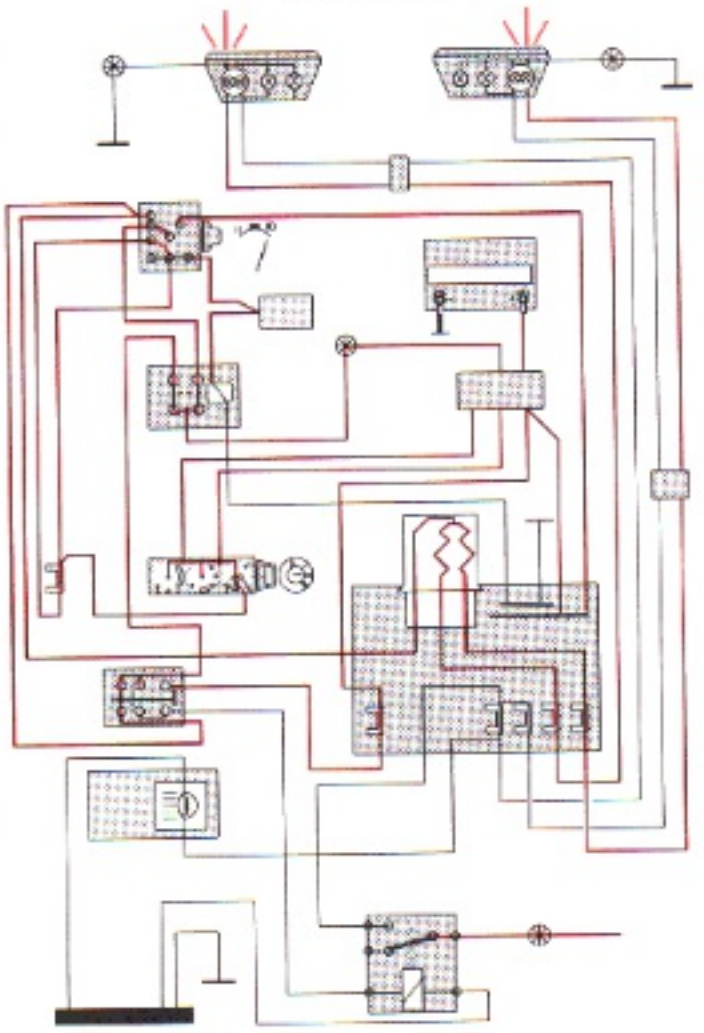

Headlight flasher

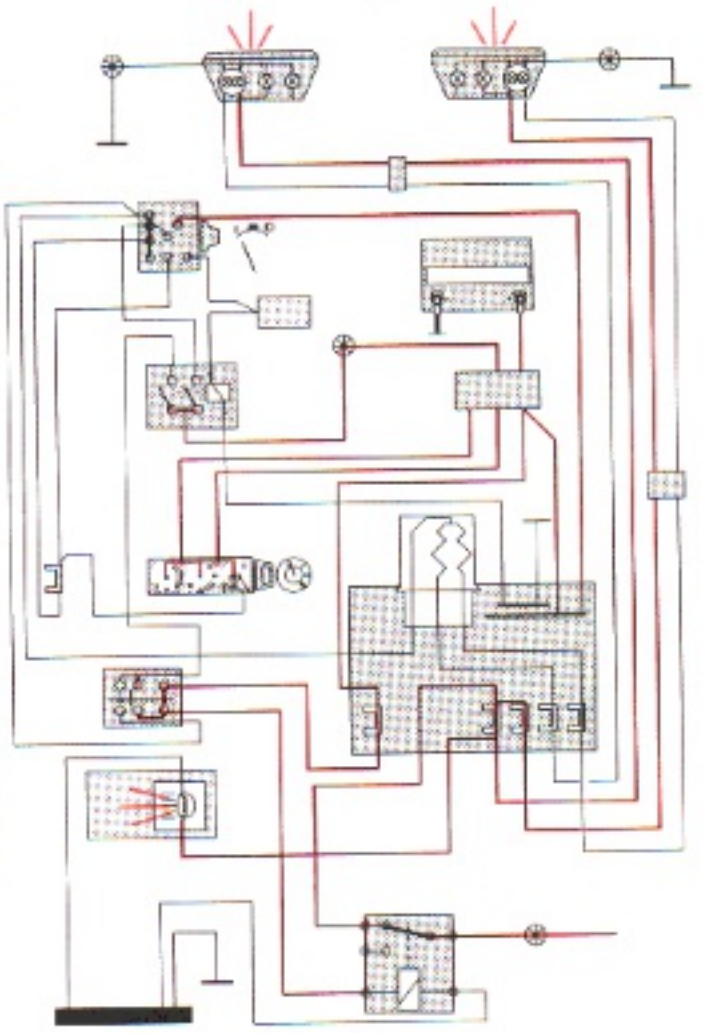

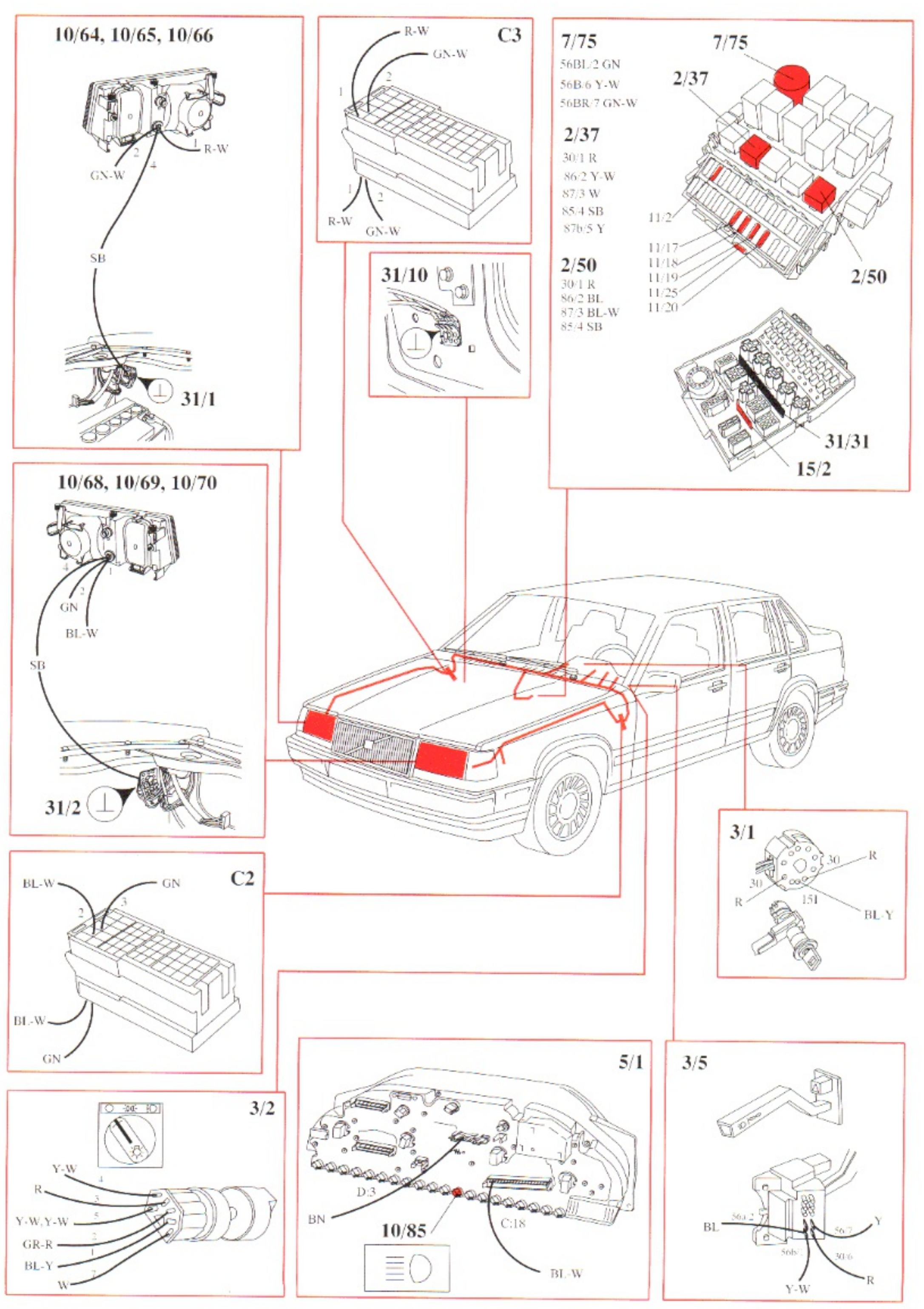
10/64, 10/65, 10/66
R-W
GN-W
SB
31/1
C3
R-W
GN-W
31/10
7/75
56BL/2 GN
56B/6 Y-W
56BR/7 GN-W
2/37
30/1 R
86/2 Y-W
87/3 W
85/4 SB
87b/5 Y
2/50
30/1 R
86/2 BL
87/3 BL-W
85/4 SB
7/75
2/37
11/2
11/17
11/18
11/19
11/25
11/20
2/50
31/31
15/2
10/68, 10/69, 10/70
GN
BL-W
SB
31/2
C2
BL-W
GN
BL-W
GN
3/1
30
R
30
151
R
BL-Y
3/2
Y-W
R
Y-W,Y-W
GR-R
BL-Y
W
5/1
D:3
BN
10/85
C:18
BL-W
3/5
BL
Y
Y-W
R

High and low beam, Great Britain

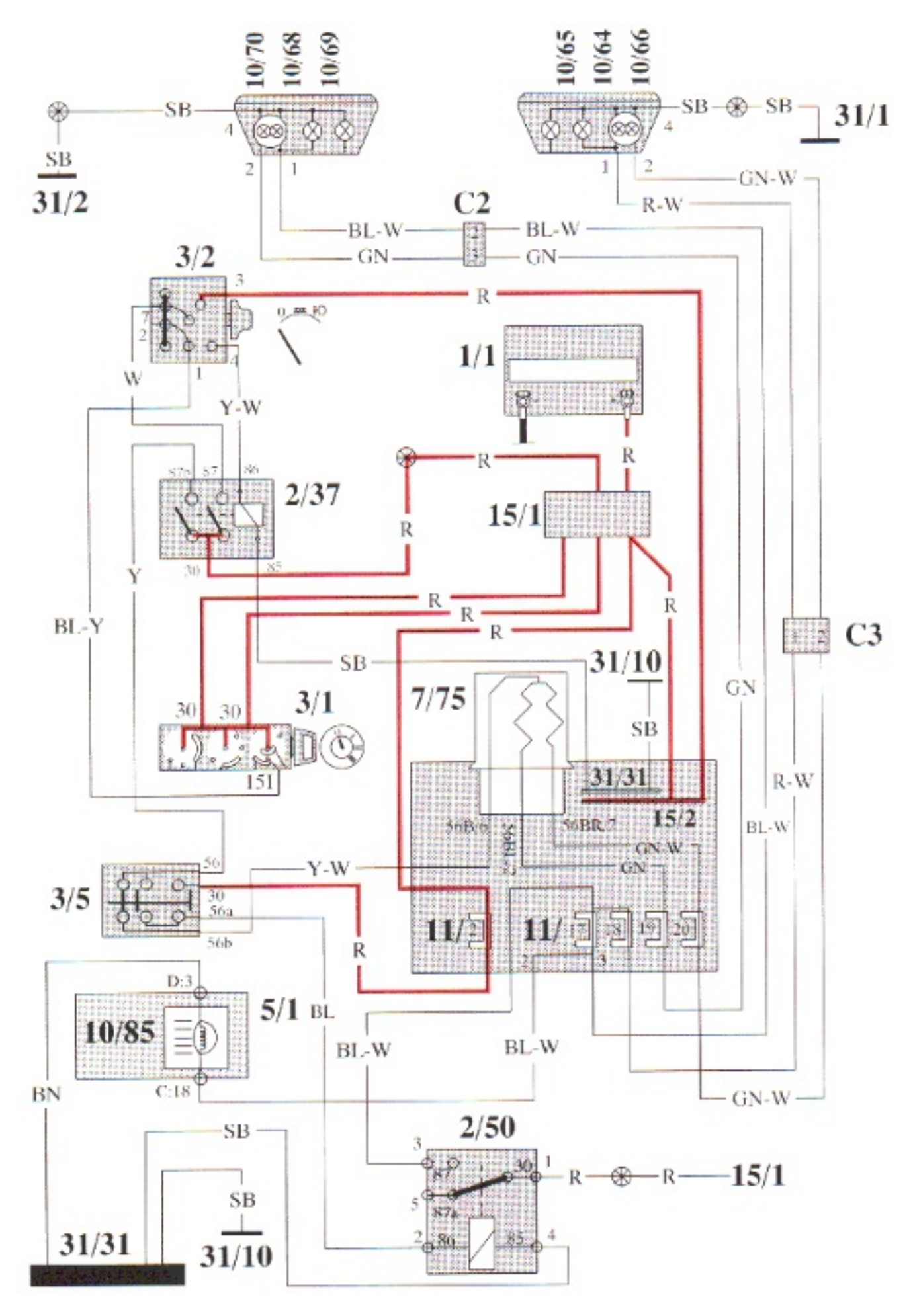

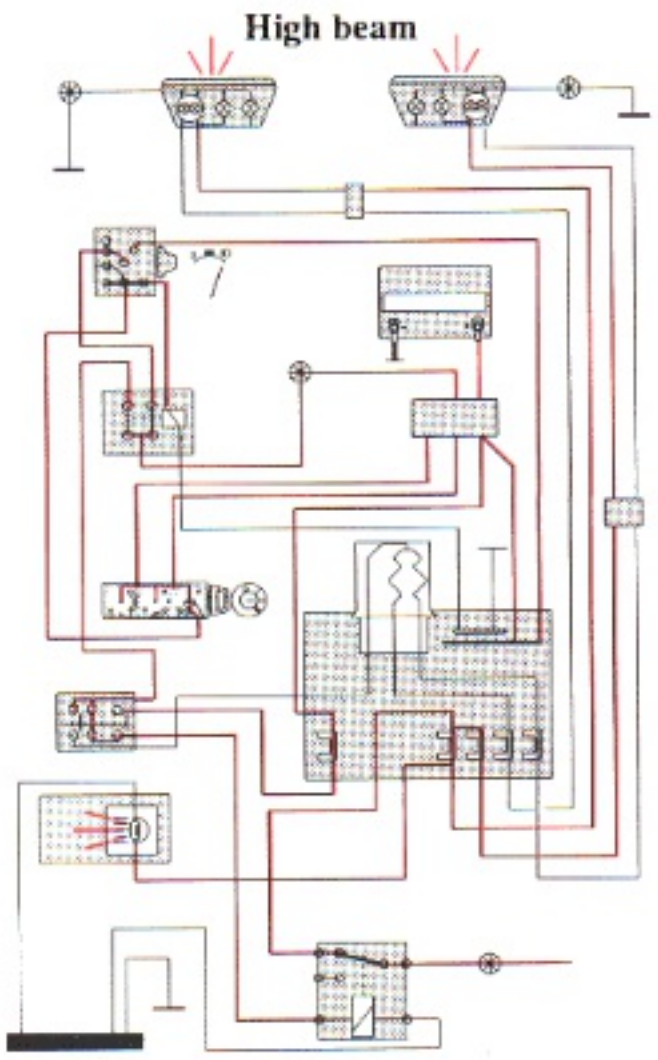
High beam

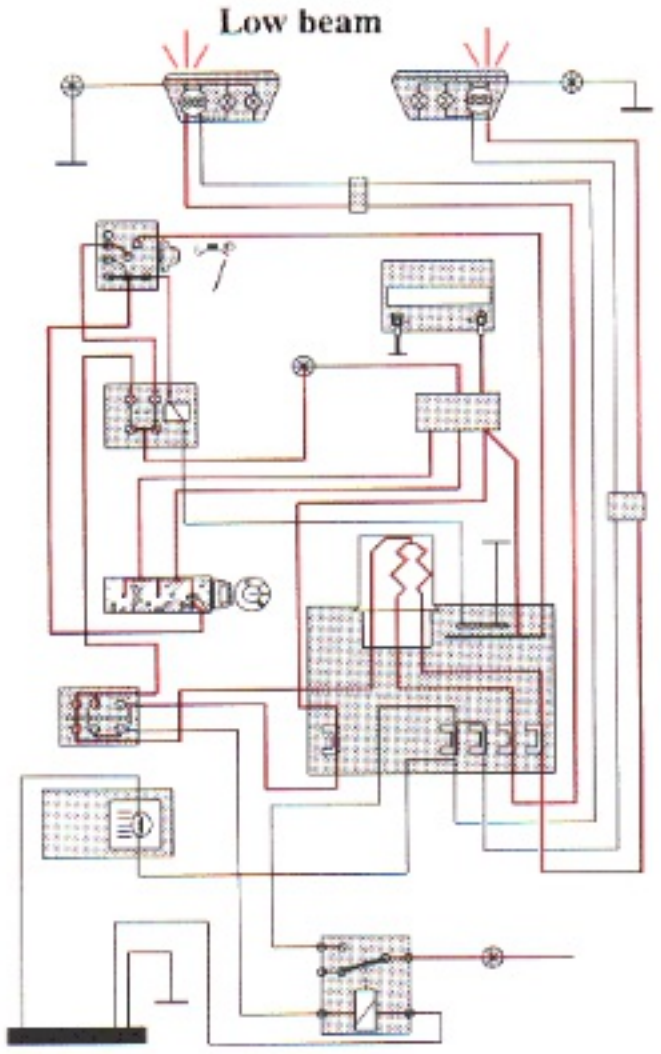
Low beam

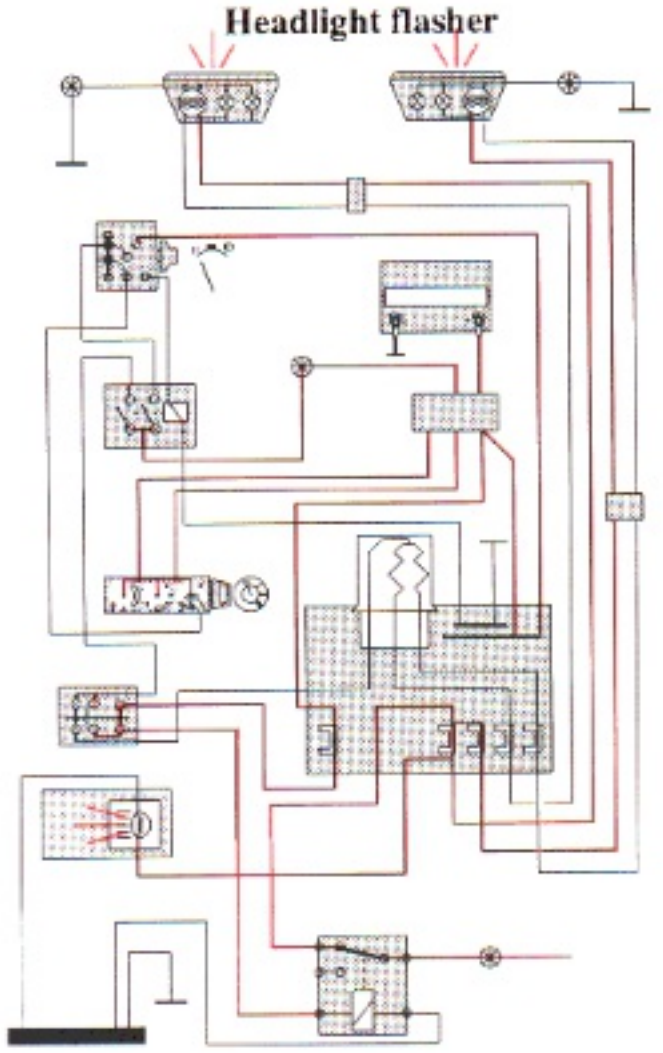
Headlight flasher

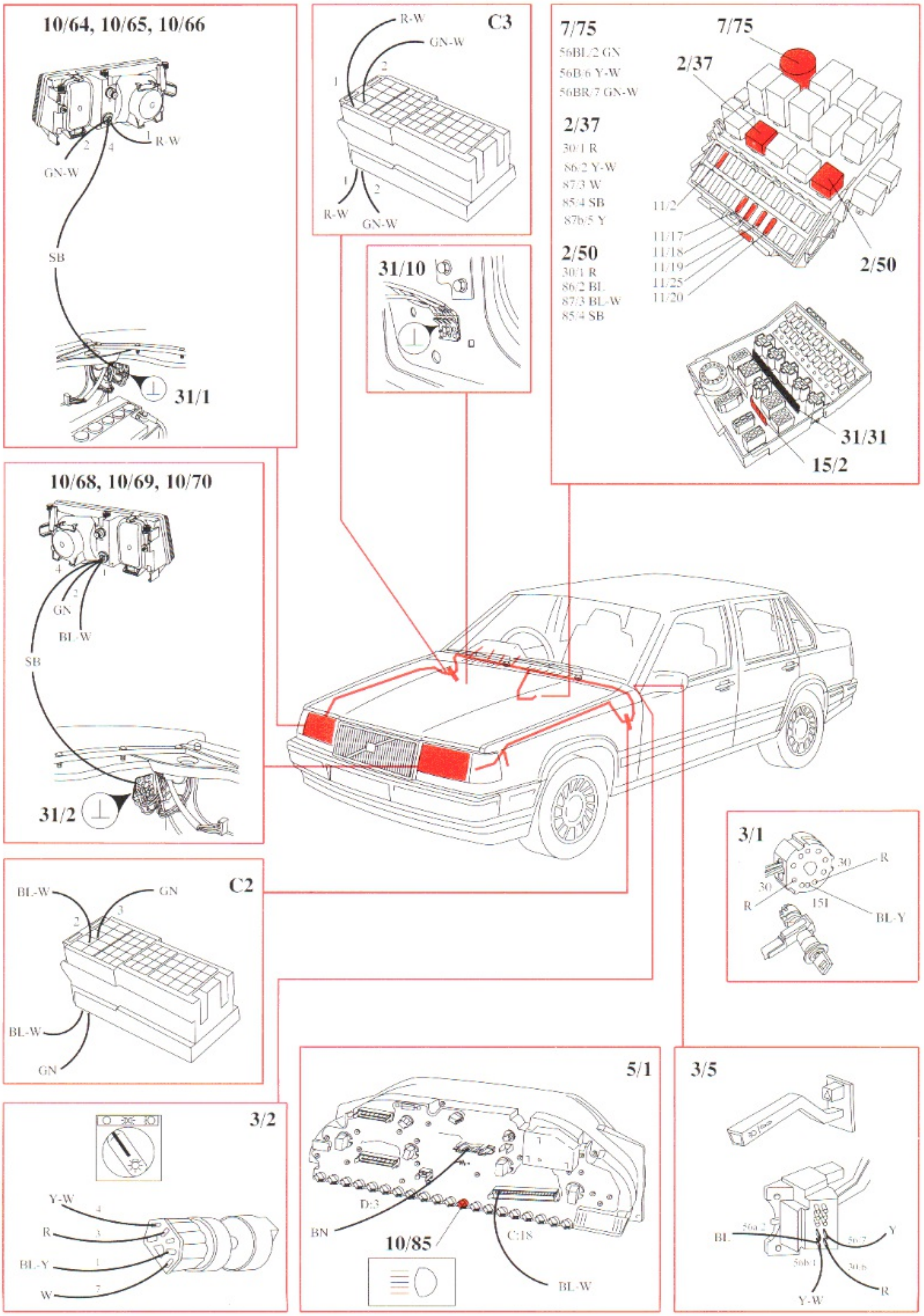
10/64, 10/65, 10/66
R-W
GN-W
SB
31/1
C3
R-W
GN-W
31/10
7/75
56BL/2 GN
56B/6 Y-W
56BR/7 GN-W
2/37
30/1 R
86/2 Y-W
87/3 W
85/4 SB
87b/5 Y
2/50
30/1 R
86/2 BL
87/3 BL-W
85/4 SB
7/75
2/37
11/2
11/17
11/18
11/19
11/25
11/20
2/50
31/31
15/2
10/68, 10/69, 10/70
GN
BL-W
SB
31/2
C2
BL-W
GN
BL-W
GN
3/1
30
R
151
BL-Y
3/2
Y-W
R
BL-Y
W
5/1
D:3
BN
10/85
C:18
BL-W
3/5
BL
Y
Y-W
R

Reduced intensity low beam (DIM-DIP)
Great Britain

Reduced intensity low beam activated when the regulator (2/3) receives the following signals:

15	56
1	0

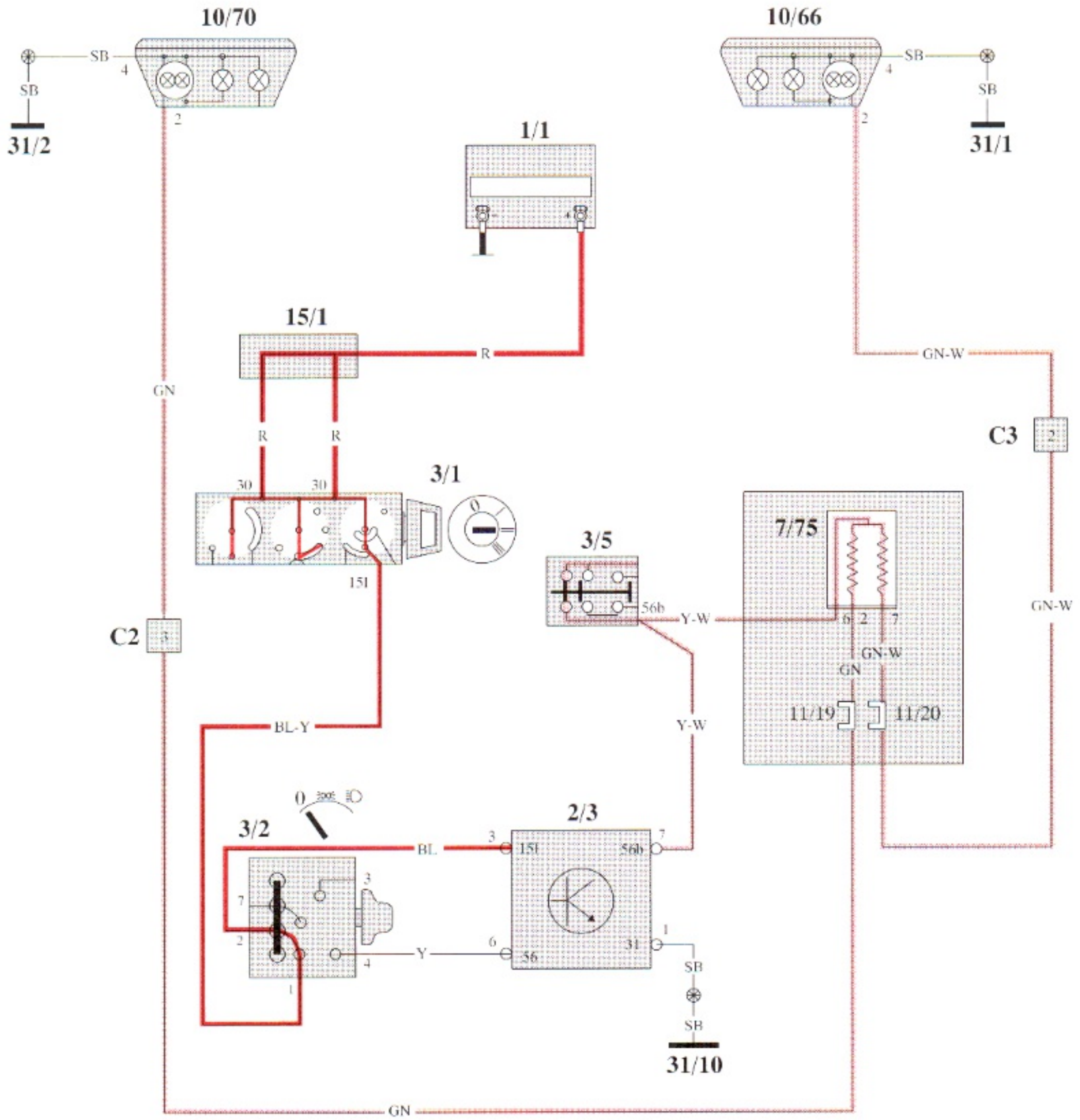

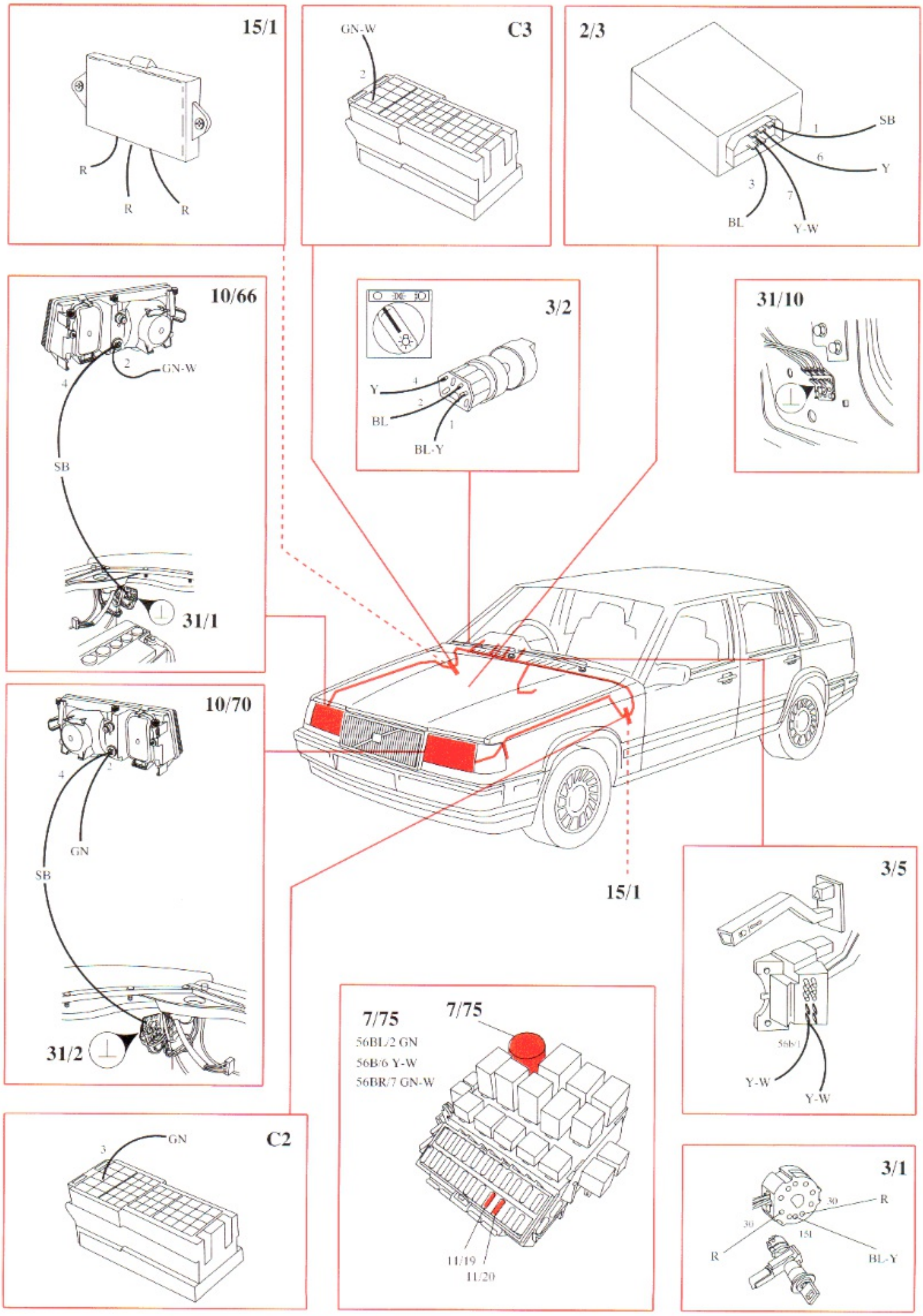
15/1
R
R
R
C3
GN-W
2
2/3
SB
1
6
Y
3
7
BL
Y-W
10/66
2
GN-W
4
SB
31/1
3/2
Y
4
2
BL
1
BL-Y
31/10
10/70
4
2
GN
SB
31/2
15/1
3/5
56b/1
Y-W
Y-W
7/75
7/75
56BL/2 GN
56B/6 Y-W
56BR/7 GN-W
11/19
11/20
C2
3
GN
3/1
30
R
30
15I
R
BL-Y

High and low beam, USA

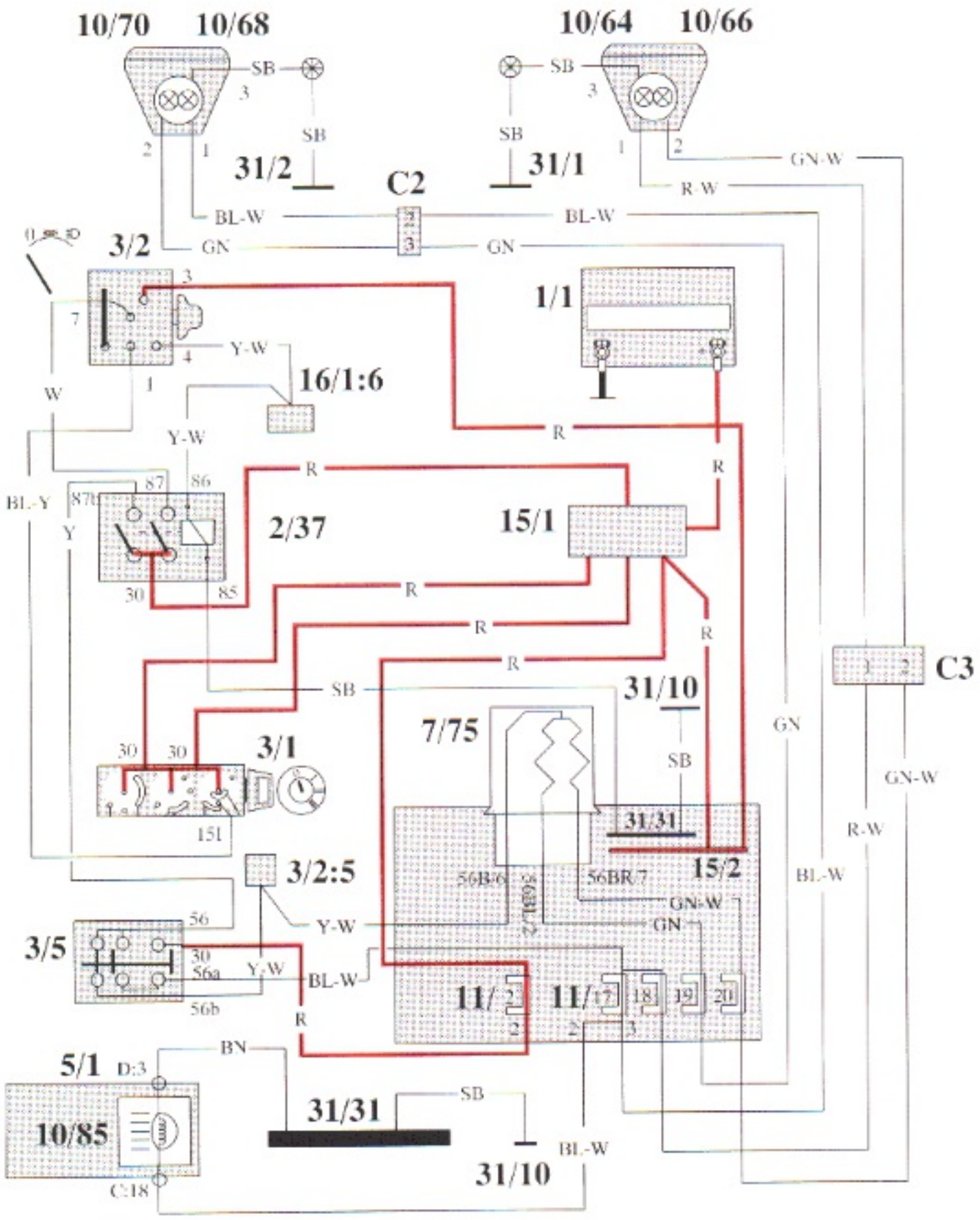

High beam

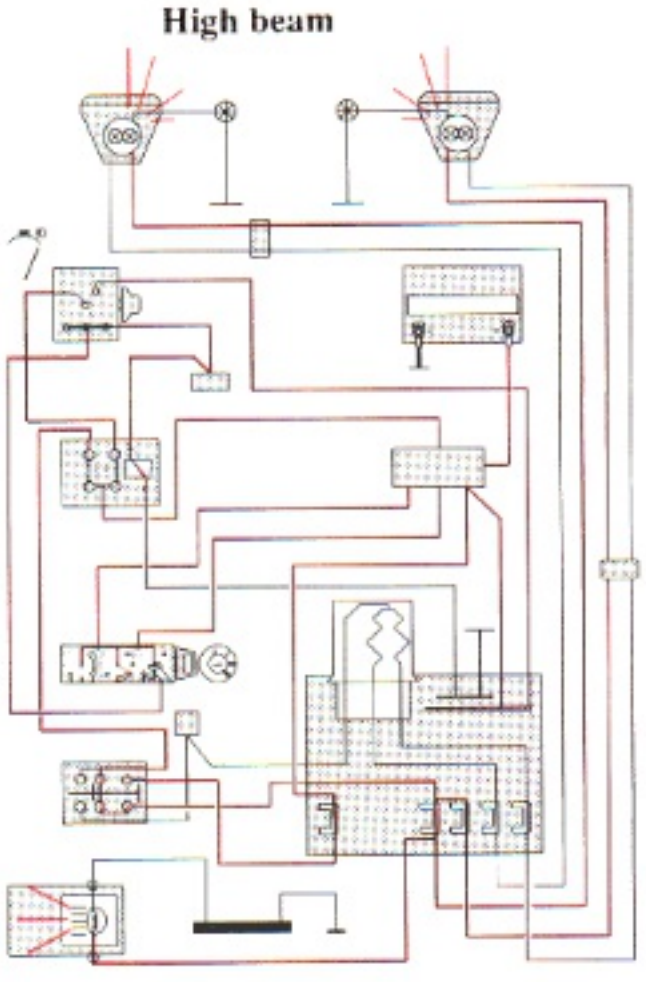

Low beam

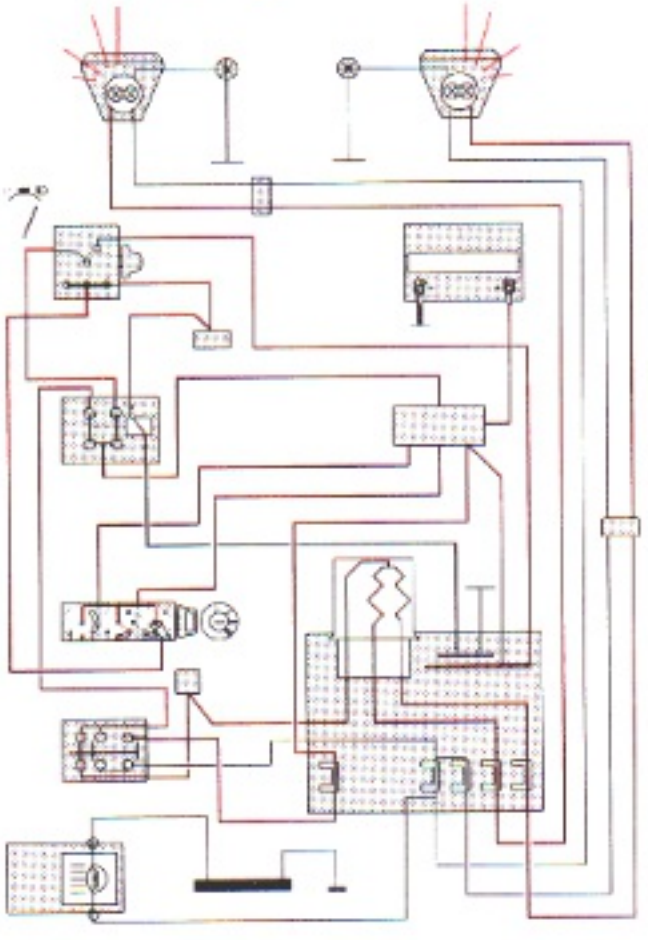

Headlight flasher

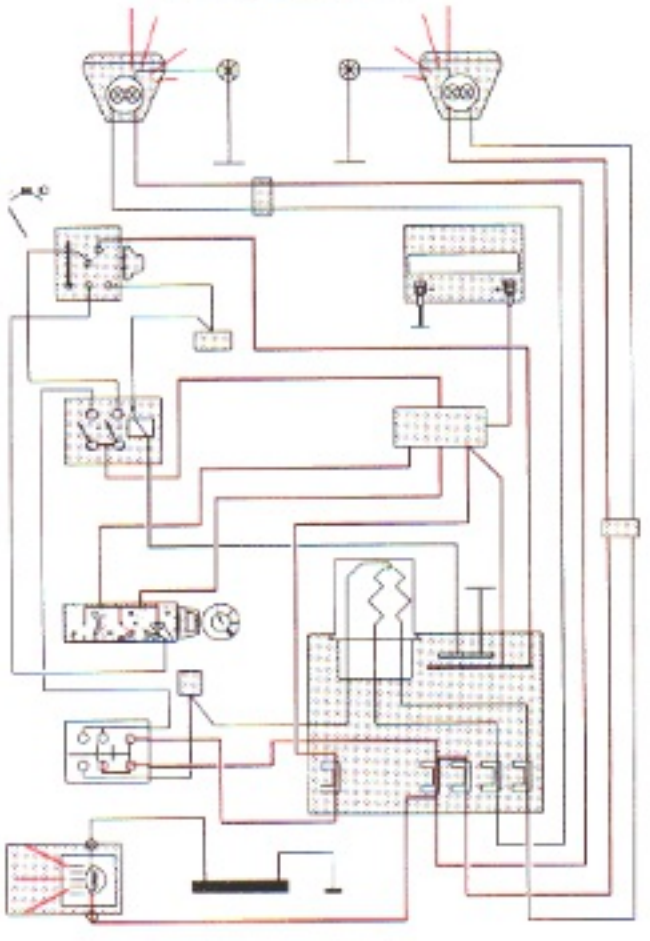

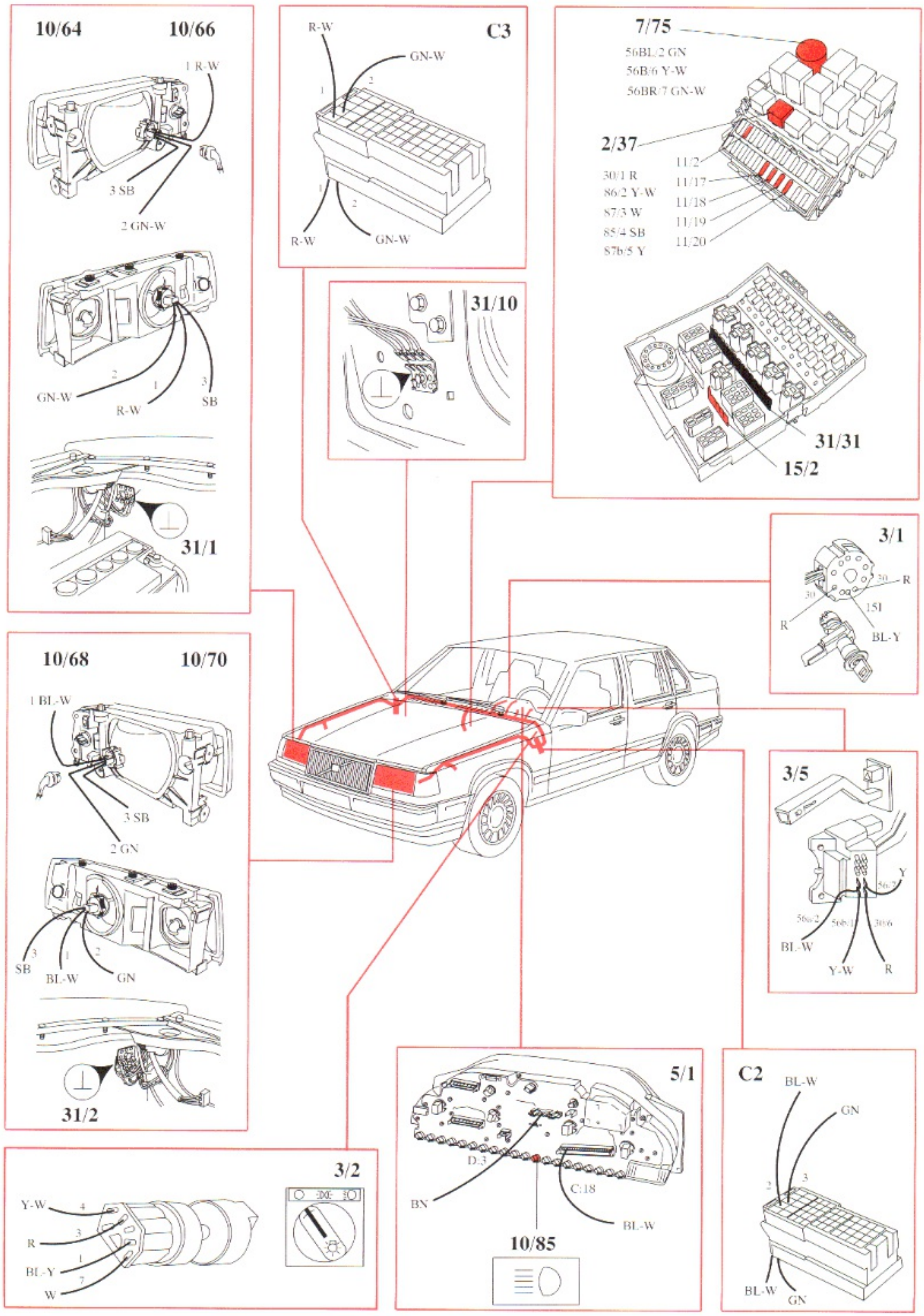
10/64
10/66
1 R-W
3 SB
2 GN-W
GN-W
R-W
SB
31/1
C3
R-W
GN-W
R-W
GN-W
31/10
7/75
56BL/2 GN
56B/6 Y-W
56BR/7 GN-W
2/37
30/1 R
86/2 Y-W
87/3 W
85/4 SB
87b/5 Y
11/2
11/17
11/18
11/19
11/20
31/31
15/2
3/1
30
R
30
15I
R
BL-Y
10/68
10/70
1 BL-W
3 SB
2 GN
SB
BL-W
GN
31/2
3/5
Y
56b/2
56b/2
56b/1
30/6
BL-W
Y-W
R
3/2
Y-W
R
BL-Y
W
5/1
D:3
C:18
BN
BL-W
10/85
C2
BL-W
GN
BL-W
GN

High and low beam, Canada

Automatic low beam with ignition lock (3/1) in pos. II

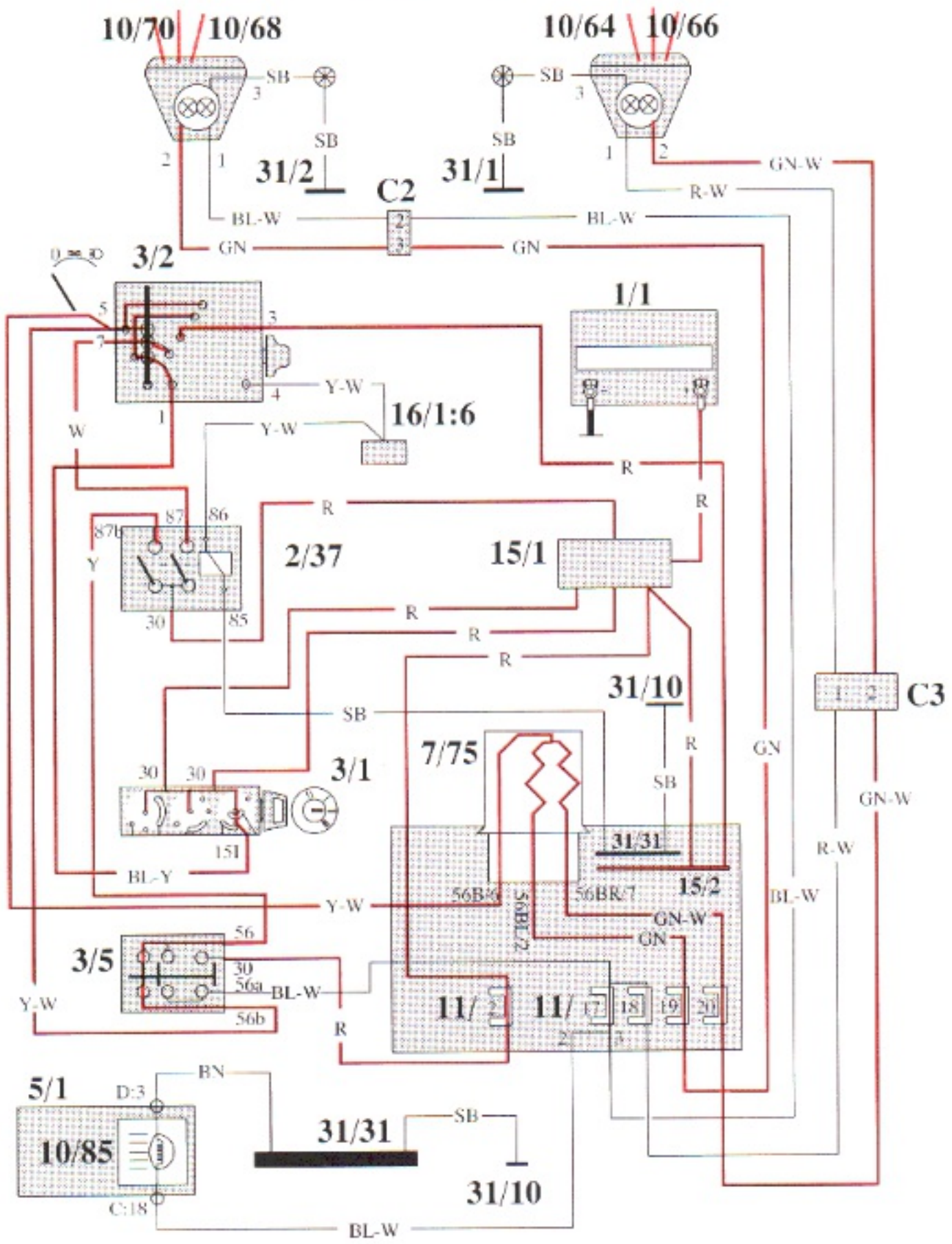

High beam

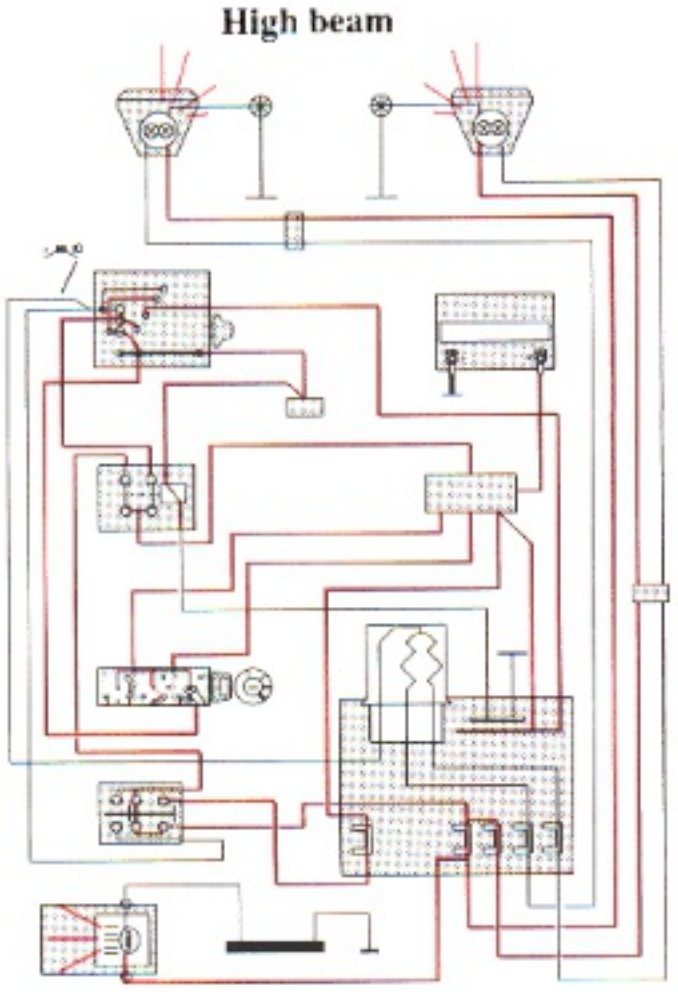

Low beam

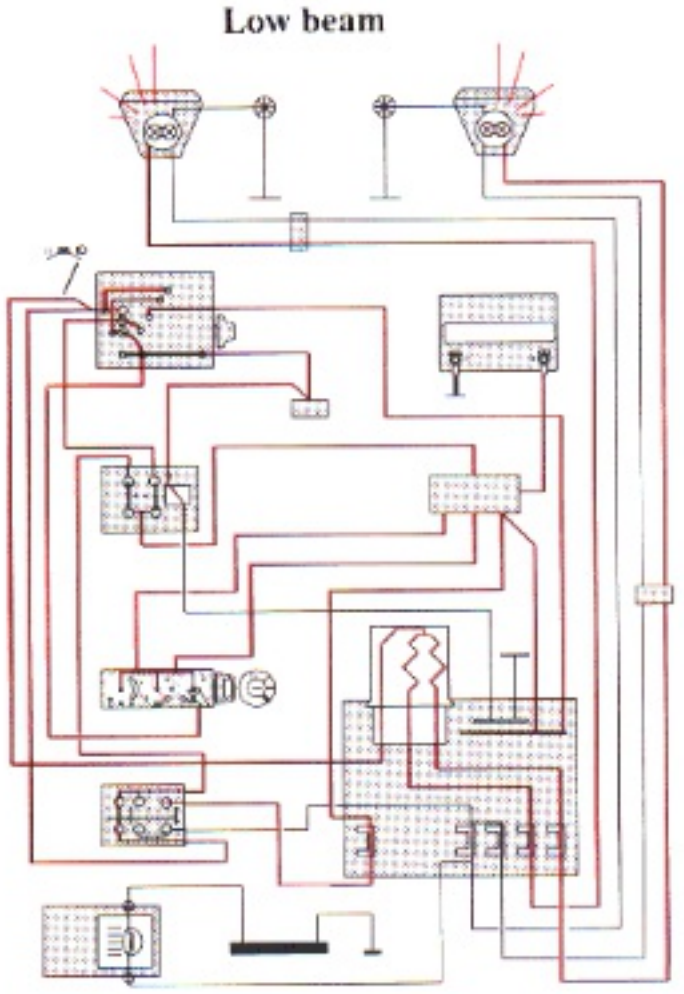

Headlight flasher

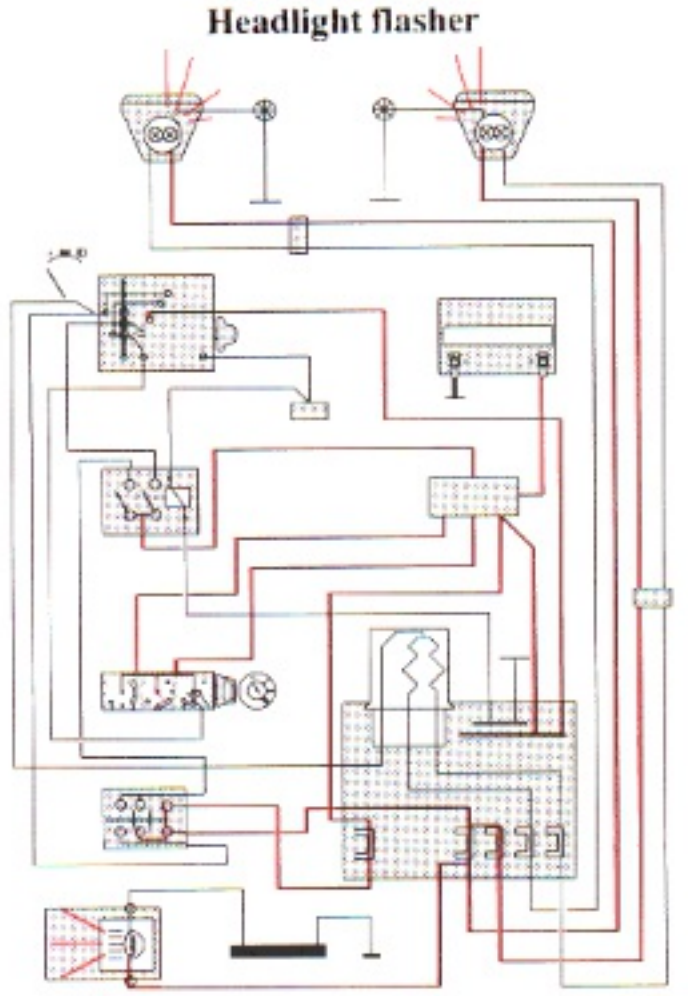

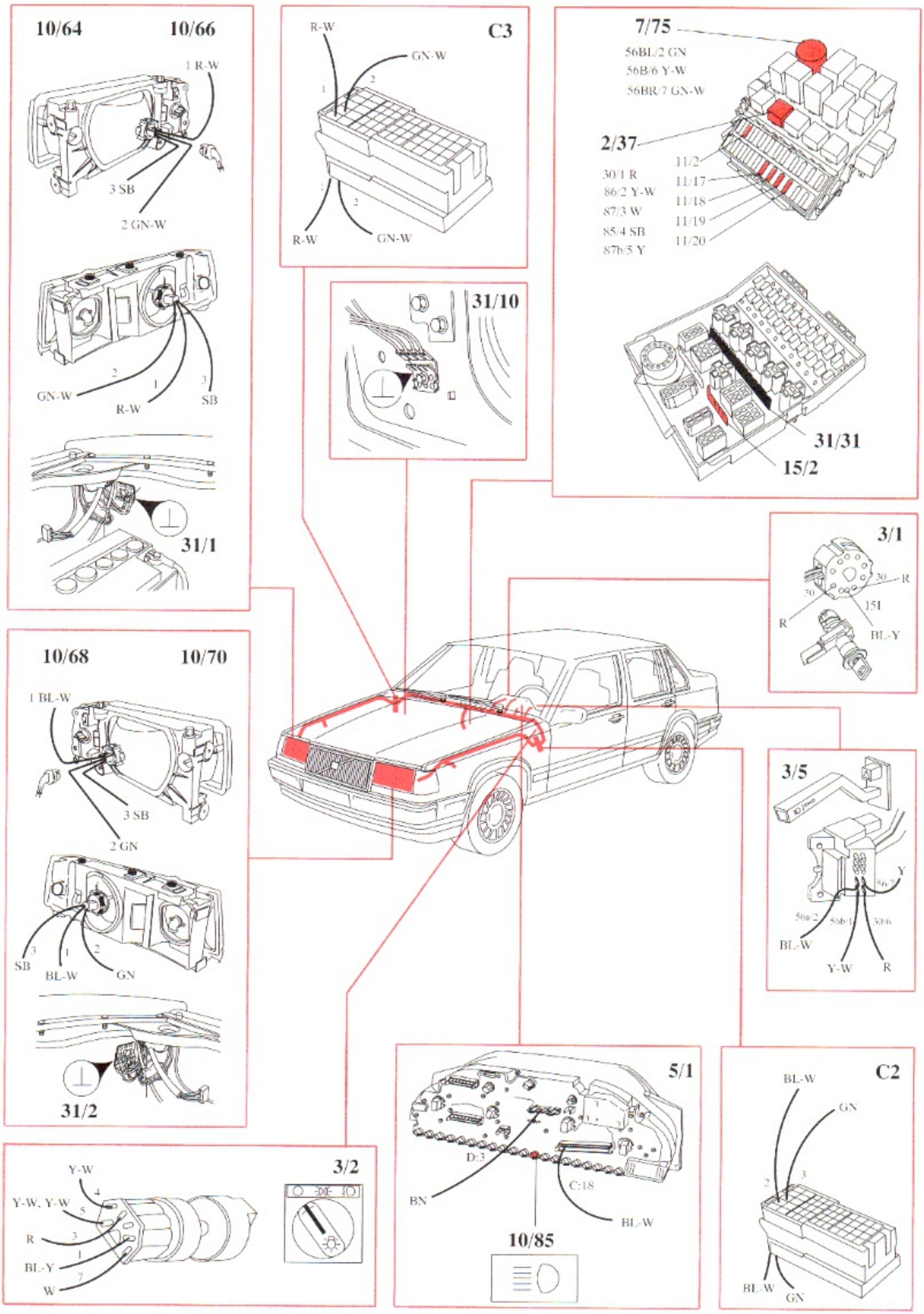
10/64
10/66
1 R-W
3 SB
2 GN-W
GN-W
R-W
SB
31/1
C3
R-W
GN-W
R-W
GN-W
31/10
7/75
56BL/2 GN
56B/6 Y-W
56BR/7 GN-W
2/37
30/1 R
86/2 Y-W
87/3 W
85/4 SB
87b/5 Y
11/2
11/17
11/18
11/19
11/20
31/31
15/2
3/1
30
R
151
BL-Y
10/68
10/70
1 BL-W
3 SB
2 GN
SB
BL-W
GN
31/2
3/5
Y
56/7
56a/2
56b/1
30/6
BL-W
Y-W
R
3/2
Y-W
Y-W, Y-W
R
BL-Y
W
5/1
D:3
C:18
BN
BL-W
10/85
C2
BL-W
GN
BL-W
GN

Beam width control

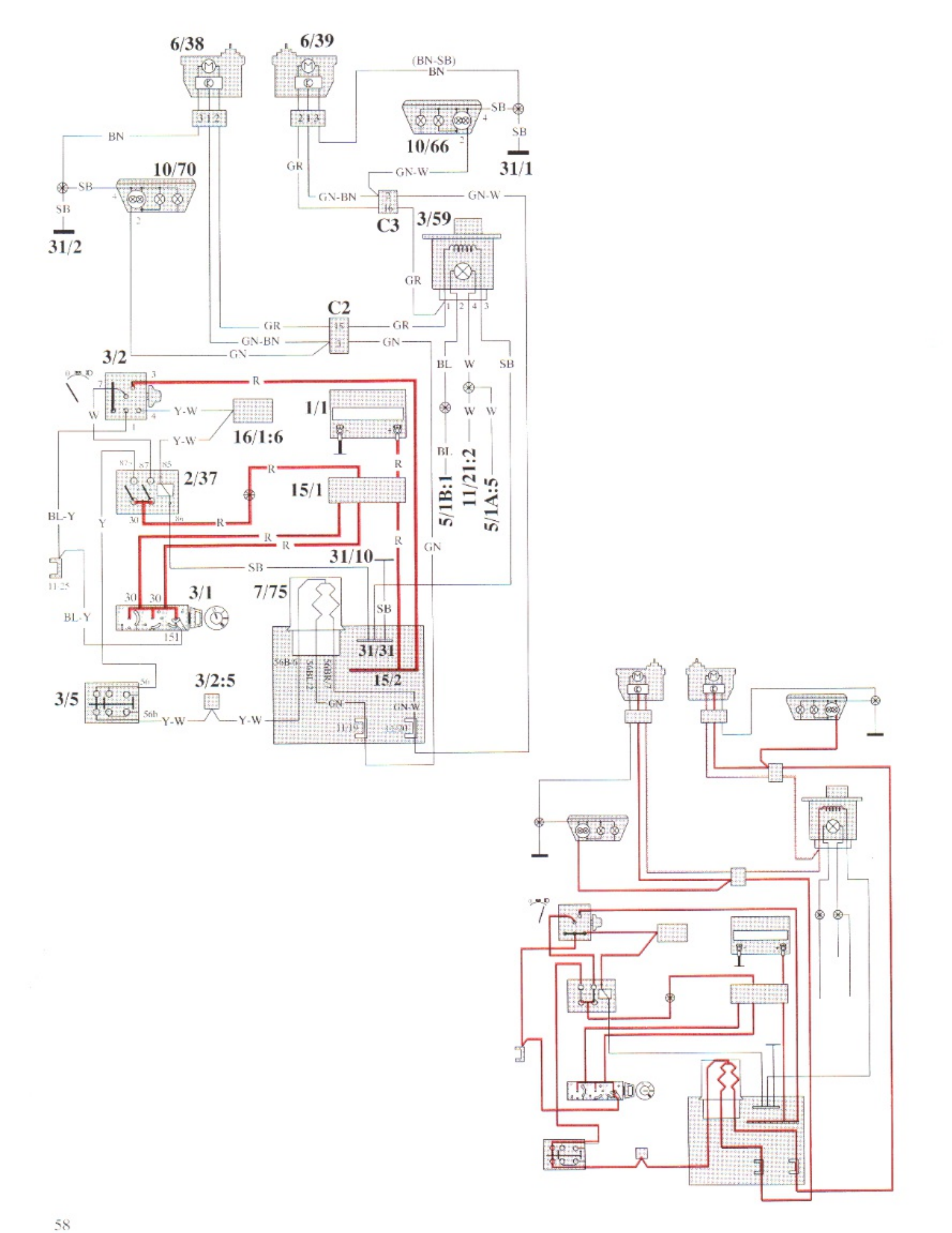

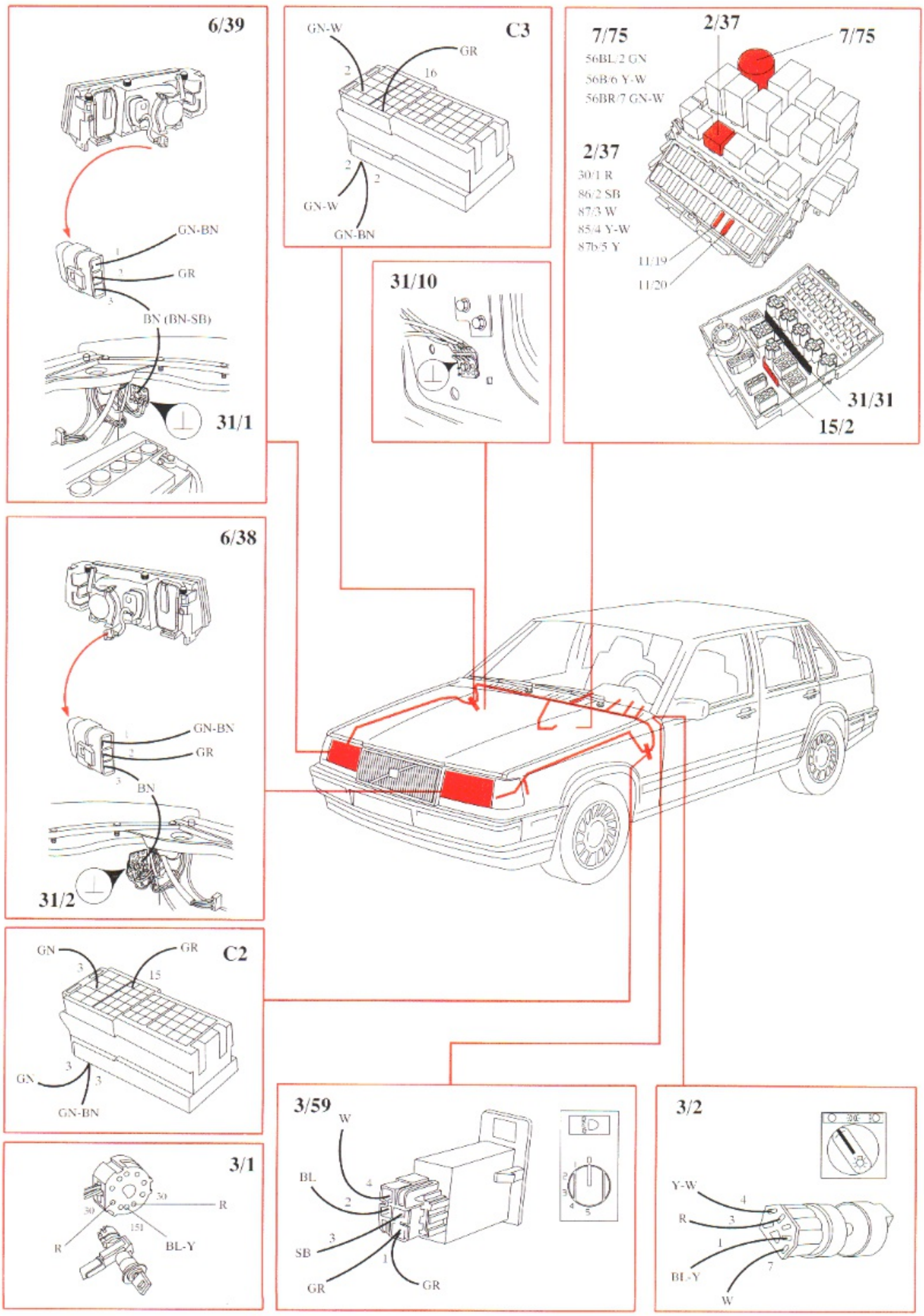
6/39
GN-BN
GR
BN (BN-SB)
31/1
6/38
GN-BN
GR
BN
31/2
C2
GN
GR
15
3
GN
3
3
GN-BN
3/1
30
30
R
151
R
BL-Y
C3
GN-W
GR
2
16
2
2
GN-W
GN-BN
31/10
7/75
56BL/2 GN
56B/6 Y-W
56BR/7 GN-W
2/37
30/1 R
86/2 SB
87/3 W
85/4 Y-W
87b/5 Y
2/37
7/75
11/19
11/20
31/31
15/2
3/59
W
BL
4
2
3
SB
1
GR
GR
3/2
Y-W
4
R
3
1
BL-Y
7
W

Parking lights, tail lights and number plate lights

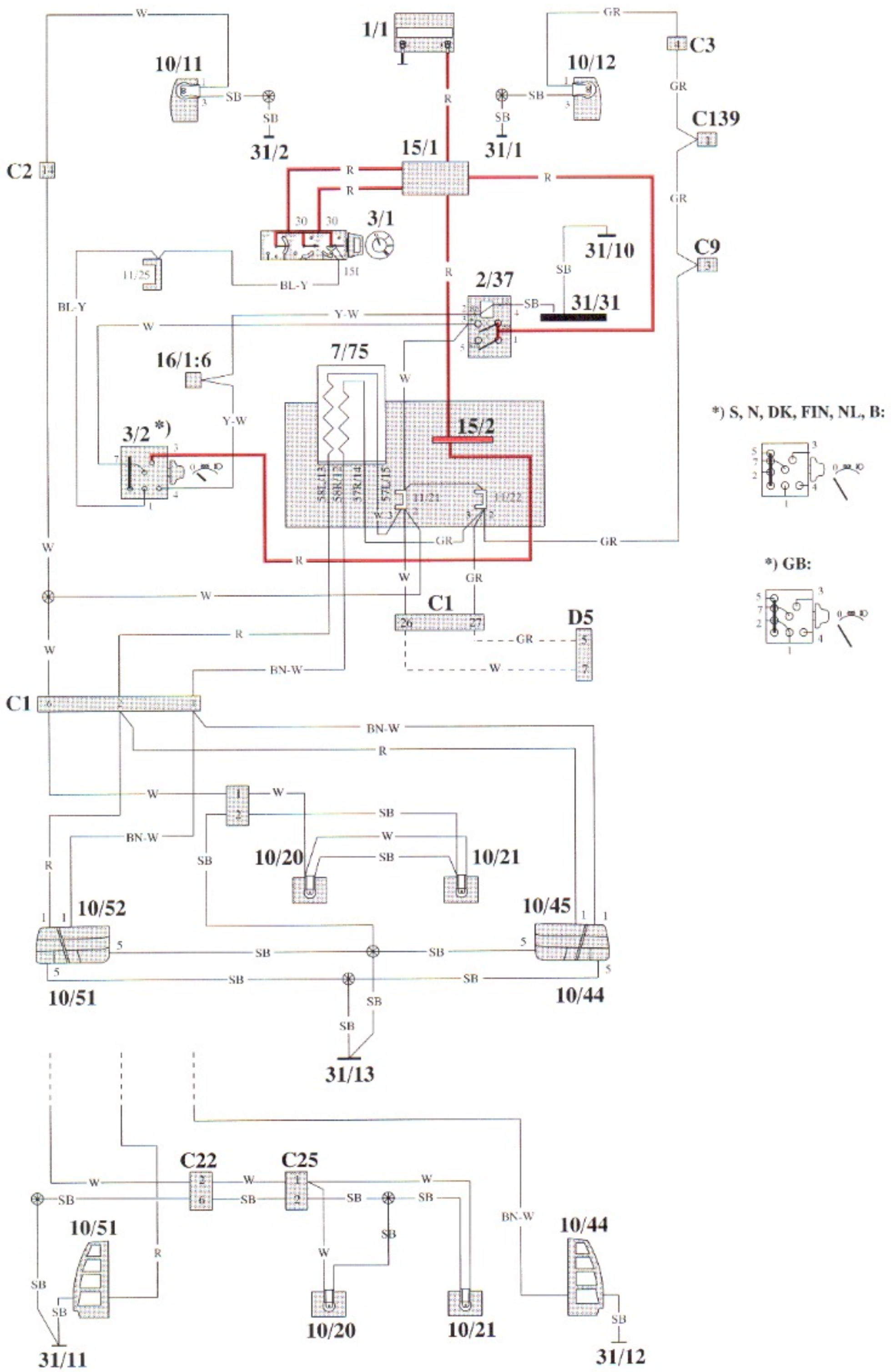

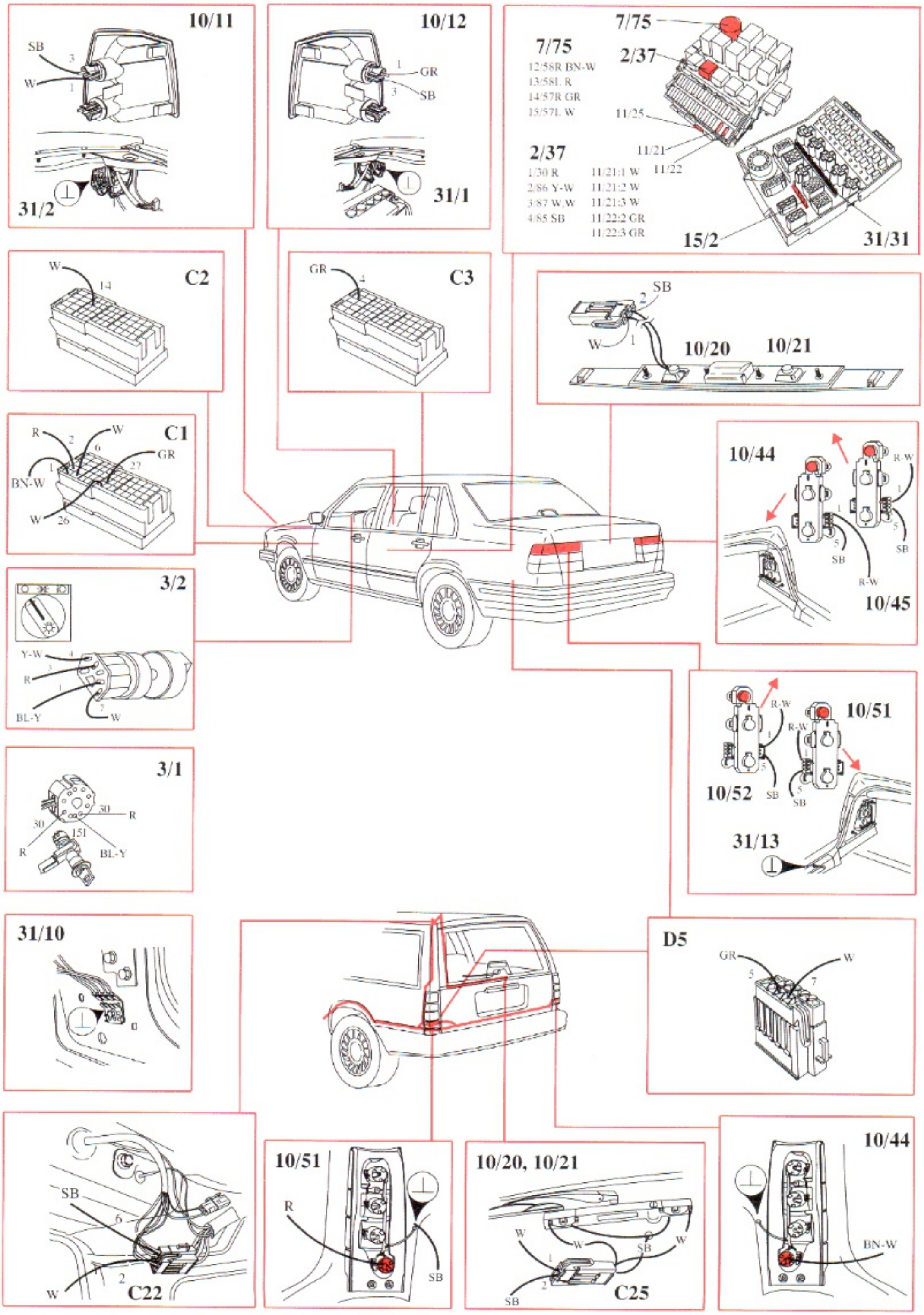
10/11
SB
3
W
1
31/2
10/12
1
GR
3
SB
31/1
7/75
7/75
12/58R BN-W
13/58L R
14/57R GR
15/57L W
2/37
2/37
11/25
11/21
11/22
1/30 R
2/86 Y-W
3/87 W,W
4/85 SB
11/21:1 W
11/21:2 W
11/21:3 W
11/22:2 GR
11/22:3 GR
15/2
31/31
W
14
C2
GR
4
C3
SB
2
W
1
10/20
10/21
R
2
W
6
GR
27
1
BN-W
W
26
C1
10/44
R-W
1
1
5
5
SB
SB
R-W
10/45
3/2
Y-W
4
3
R
1
7
BL-Y
W
10/51
R-W
R-W
1
1
5
5
10/52
SB
SB
SB
31/13
3/1
30
R
30
151
R
BL-Y
31/10
D5
GR
W
5
7
SB
6
2
W
C22
10/51
R
SB
10/20, 10/21
W
W
SB
W
1
2
SB
C25
10/44
BN-W

Parking lights, tail lights and number plate lights USA, Canada

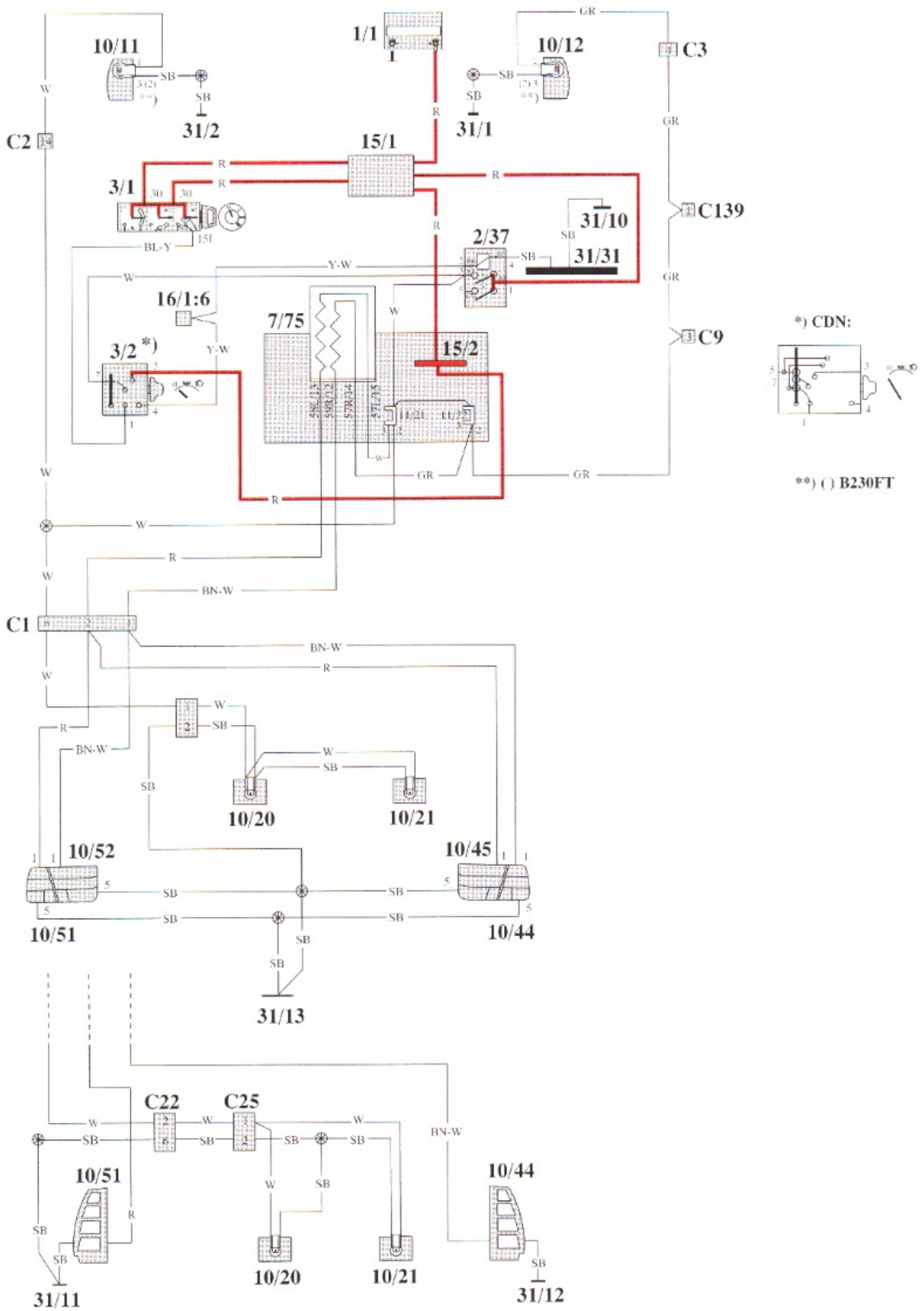

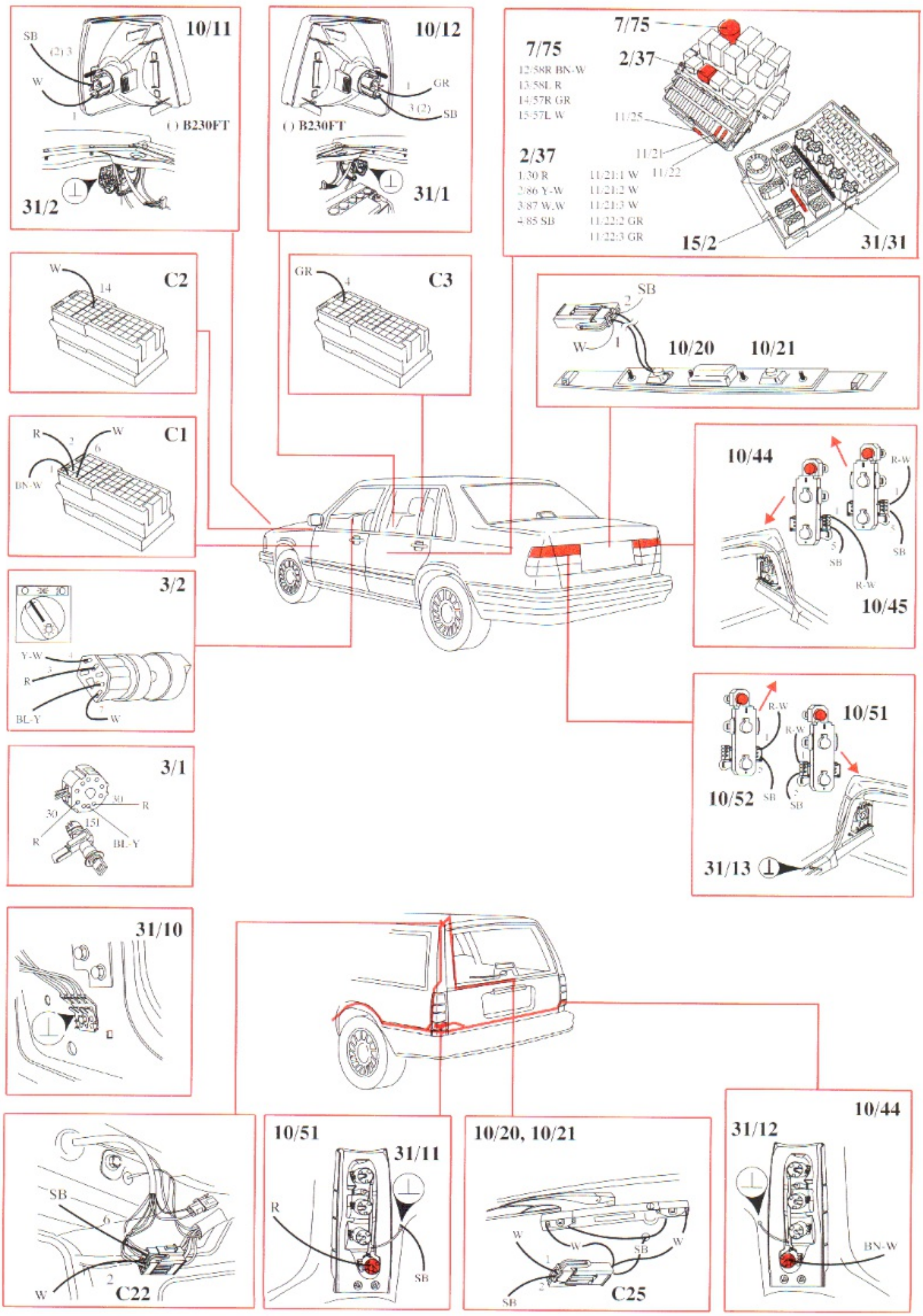
10/11
SB
(2) 3
W
1
() B230FT
31/2
10/12
1
GR
3 (2)
SB
() B230FT
31/1
7/75
12/58R BN-W
13/58L R
14/57R GR
15/57L W
2/37
1/30 R
2/86 Y-W
3/87 W-W
4/85 SB
11/25
11/21
11/22
11/21:1 W
11/21:2 W
11/21:3 W
11/22:2 GR
11/22:3 GR
15/2
31/31
C2
W
14
C3
GR
4
SB
2
W
1
10/20
10/21
C1
R
2
W
6
1
BN-W
10/44
R-W
1
5
SB
SB
R-W
10/45
3/2
Y-W
R
BL-Y
W
10/51
R-W
R-W
10/52
SB
SB
31/13
3/1
30
R
151
R
BL-Y
31/10
C22
SB
6
2
W
10/51
31/11
R
SB
10/20, 10/21
W
W
SB
W
1
2
SB
C25
10/44
31/12
BN-W

Brake lights

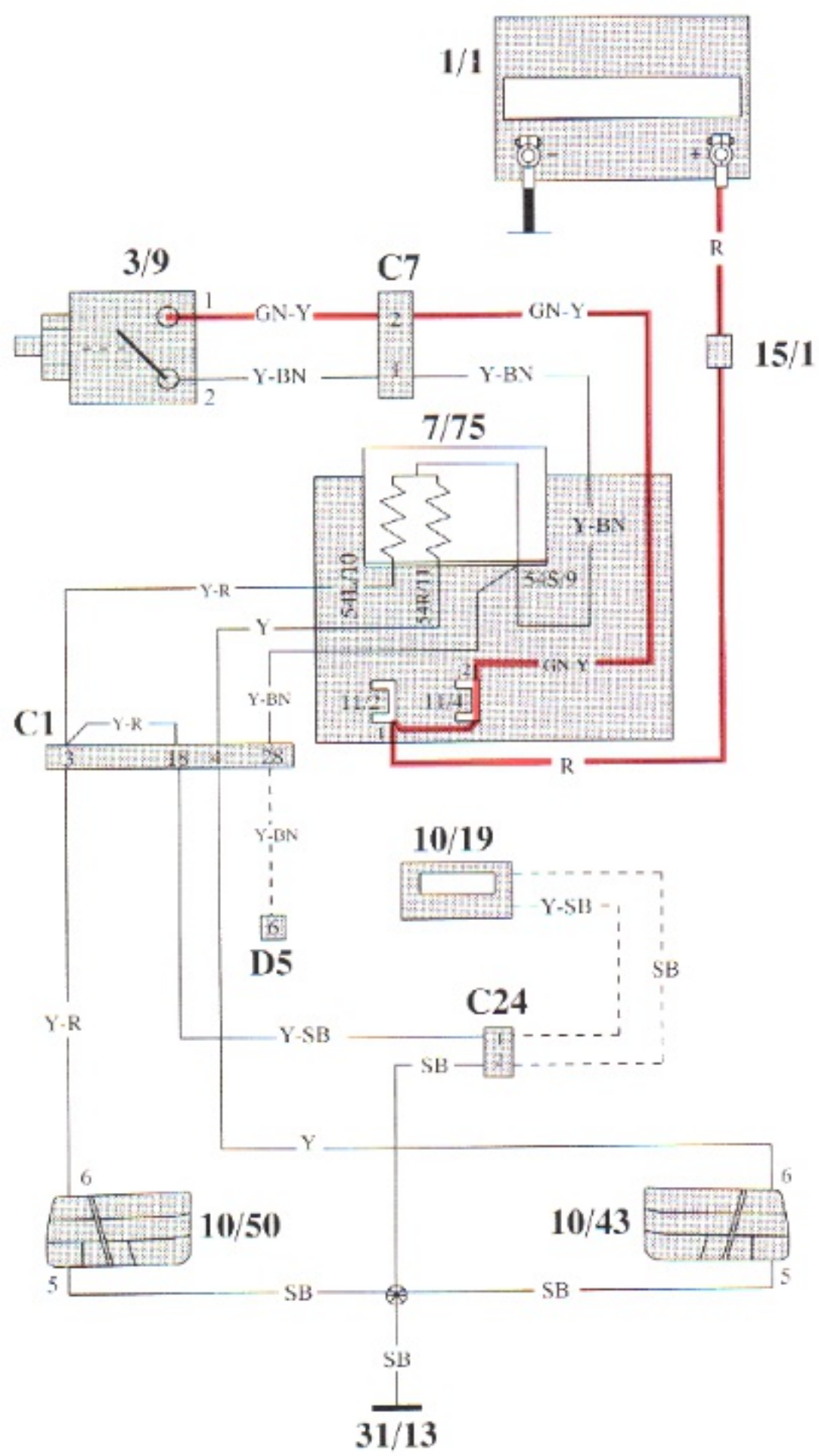

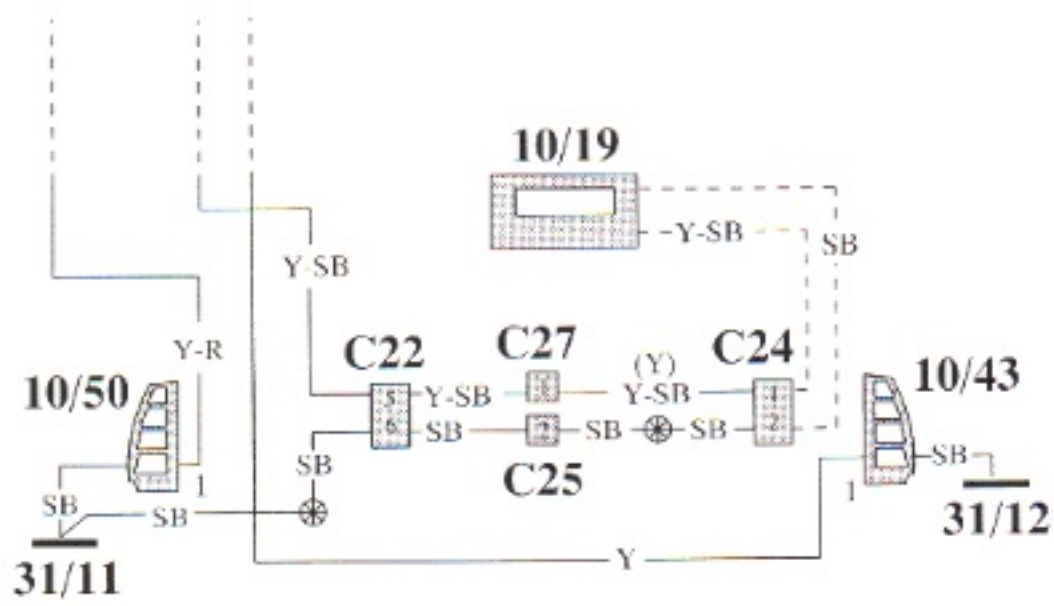

Brake pedal pressed

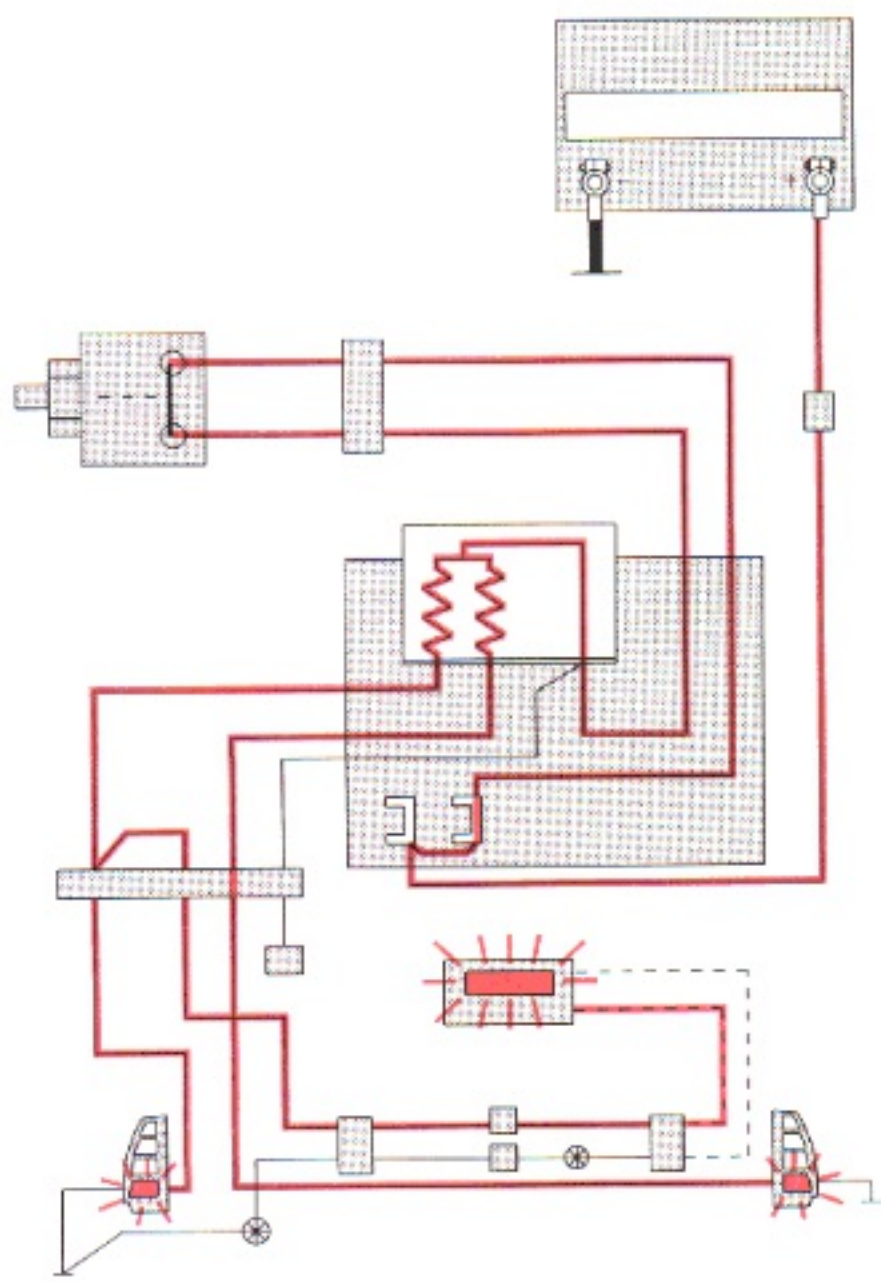

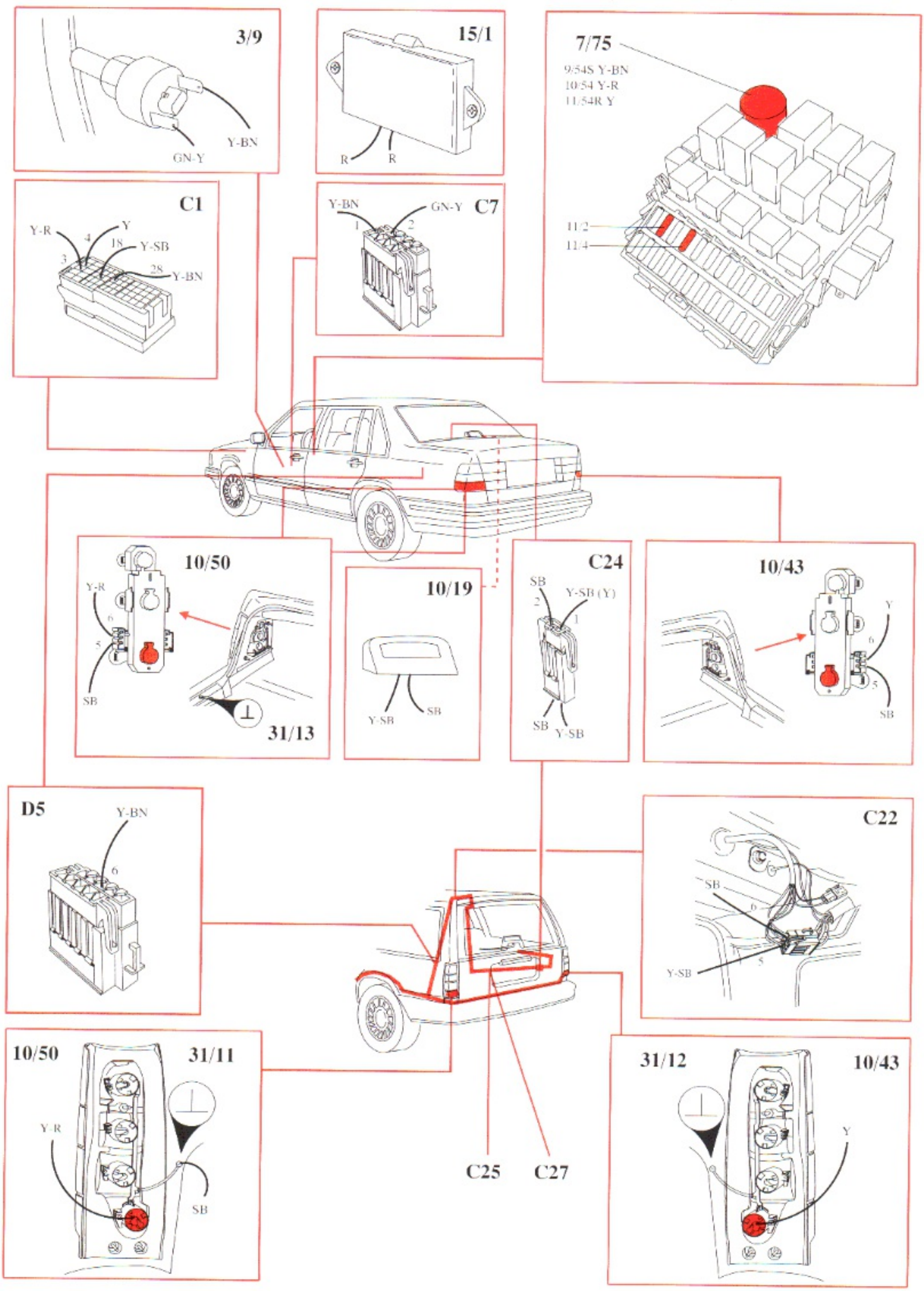
3/9
GN-Y
Y-BN
15/1
R
R
7/75
9/54S Y-BN
10/54 Y-R
11/54R Y
11/2
11/4
C1
Y-R
4
Y
18
Y-SB
3
28
Y-BN
C7
Y-BN
GN-Y
1
2
10/50
Y-R
6
5
SB
31/13
10/19
Y-SB
SB
C24
SB
2
Y-SB (Y)
1
SB
Y-SB
10/43
Y
6
5
SB
D5
Y-BN
6
C22
SB
6
5
Y-SB
10/50
31/11
Y-R
SB
C25
C27
31/12
10/43
Y

Brake lights, USA, Canada

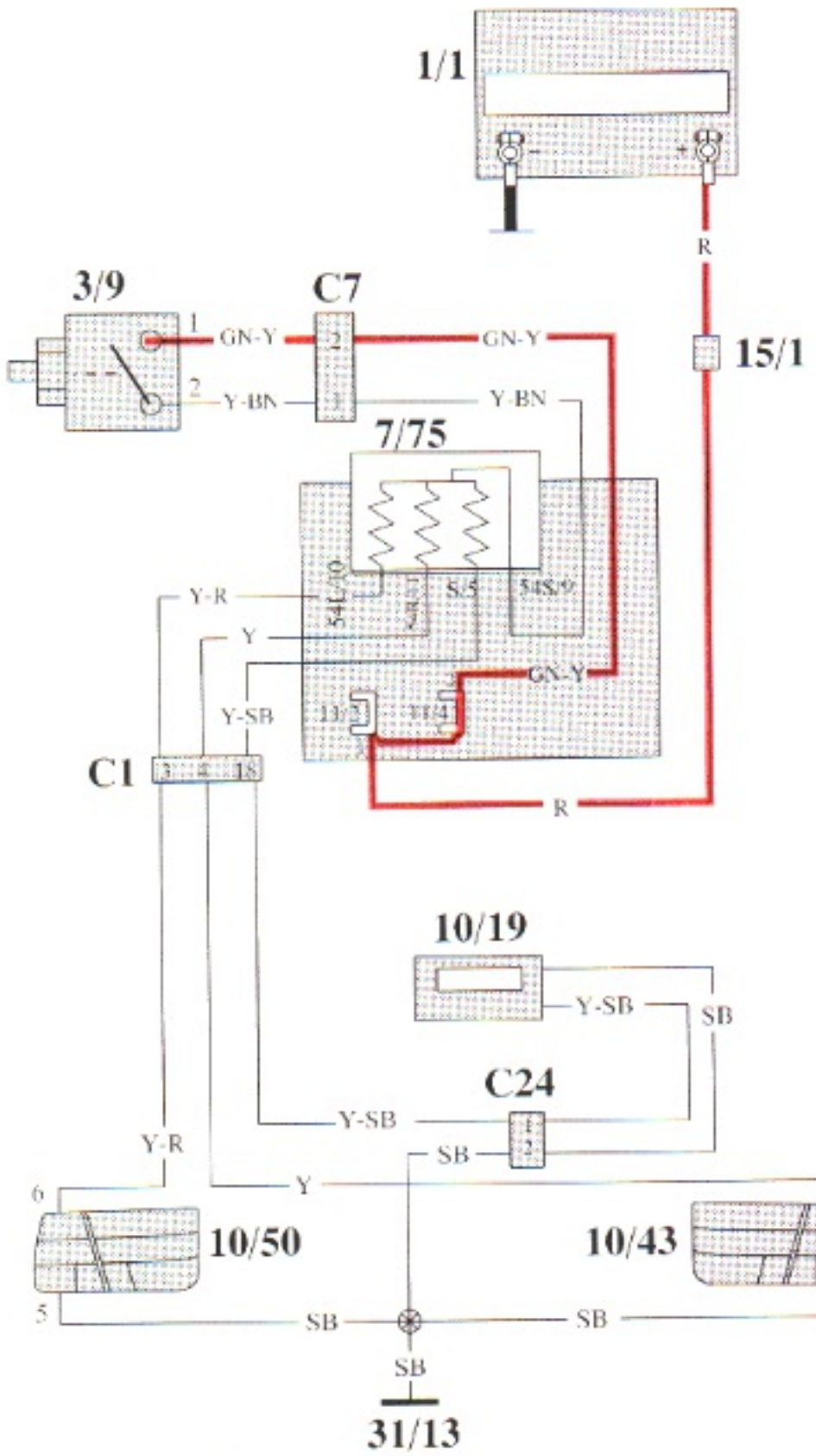

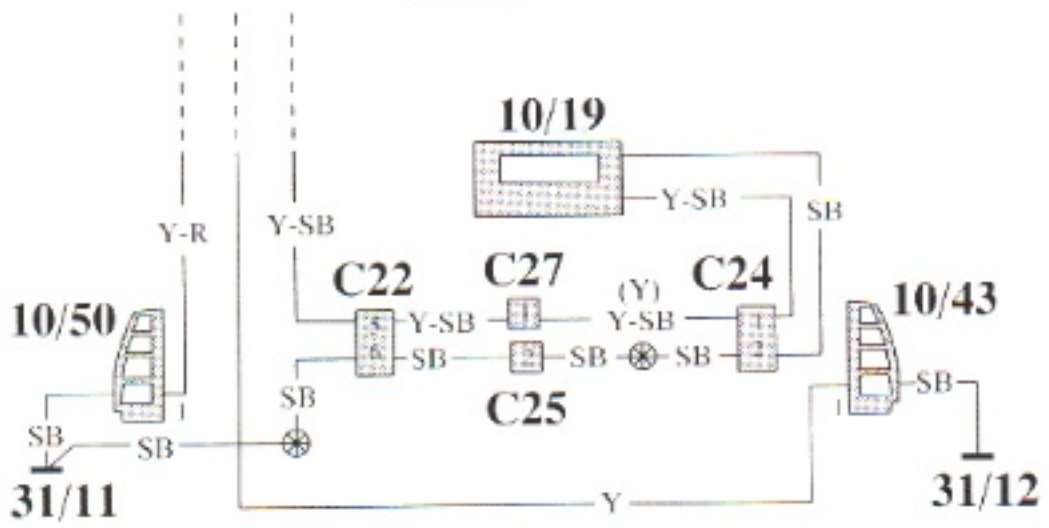

Brake pedal pressed

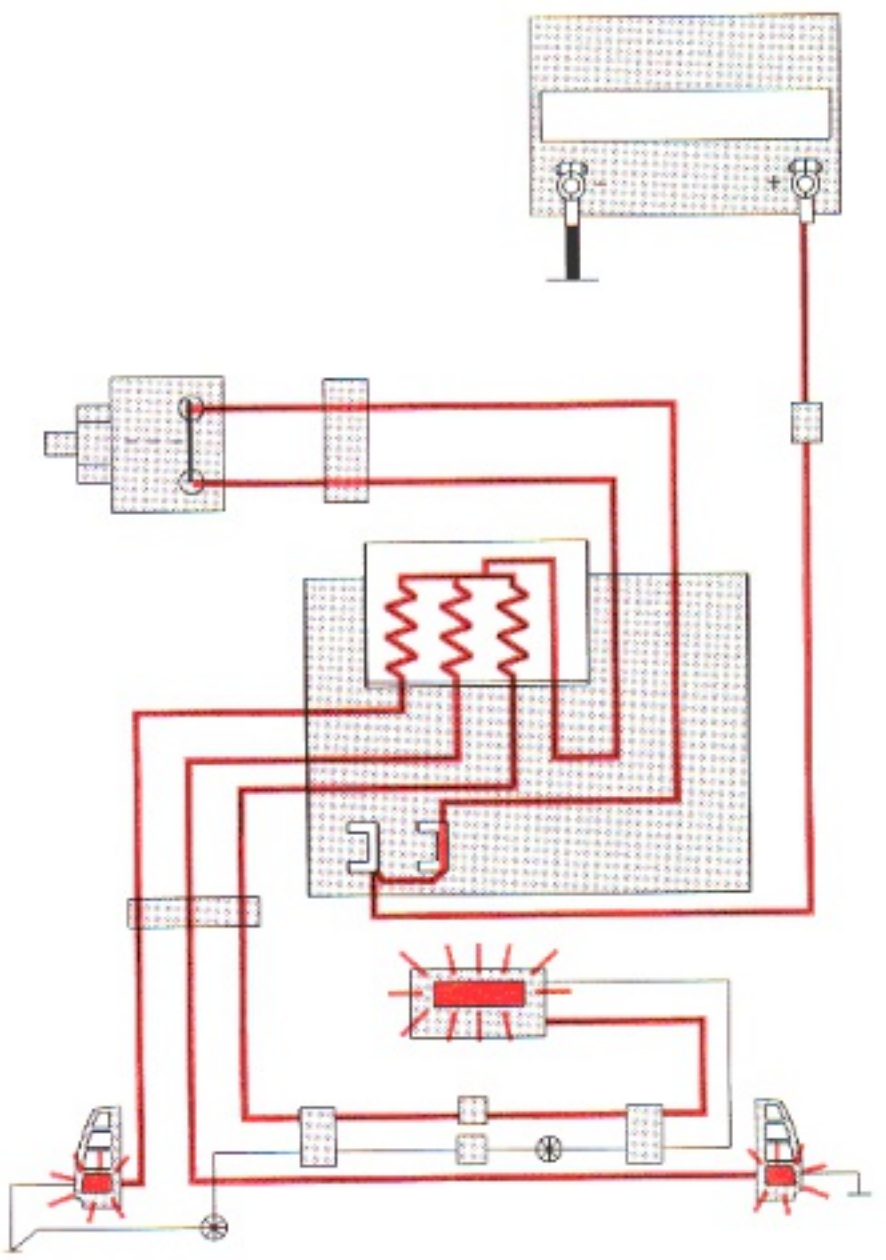

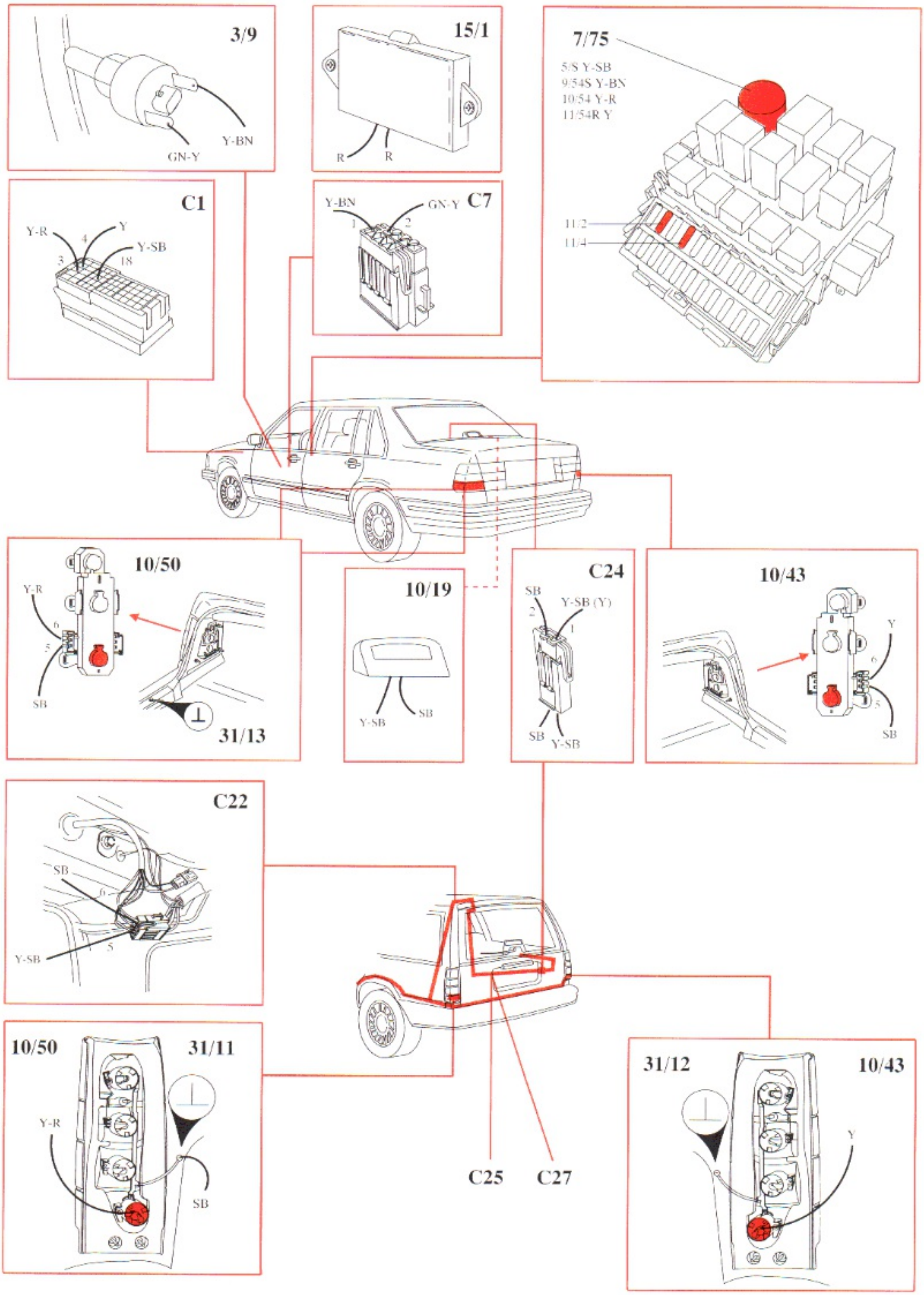
3/9
GN-Y
Y-BN
15/1
R
R
7/75
5/S Y-SB
9/54S Y-BN
10/54 Y-R
11/54R Y
11/2
11/4
C1
Y-R
4
Y
Y-SB
3
18
C7
Y-BN
GN-Y
1
2
10/50
Y-R
6
5
SB
31/13
10/19
Y-SB
SB
C24
SB
2
Y-SB (Y)
1
SB
Y-SB
10/43
Y
6
5
SB
C22
SB
Y-SB
10/50
31/11
Y-R
SB
C25
C27
31/12
10/43
Y

Back-up (reversing) lights

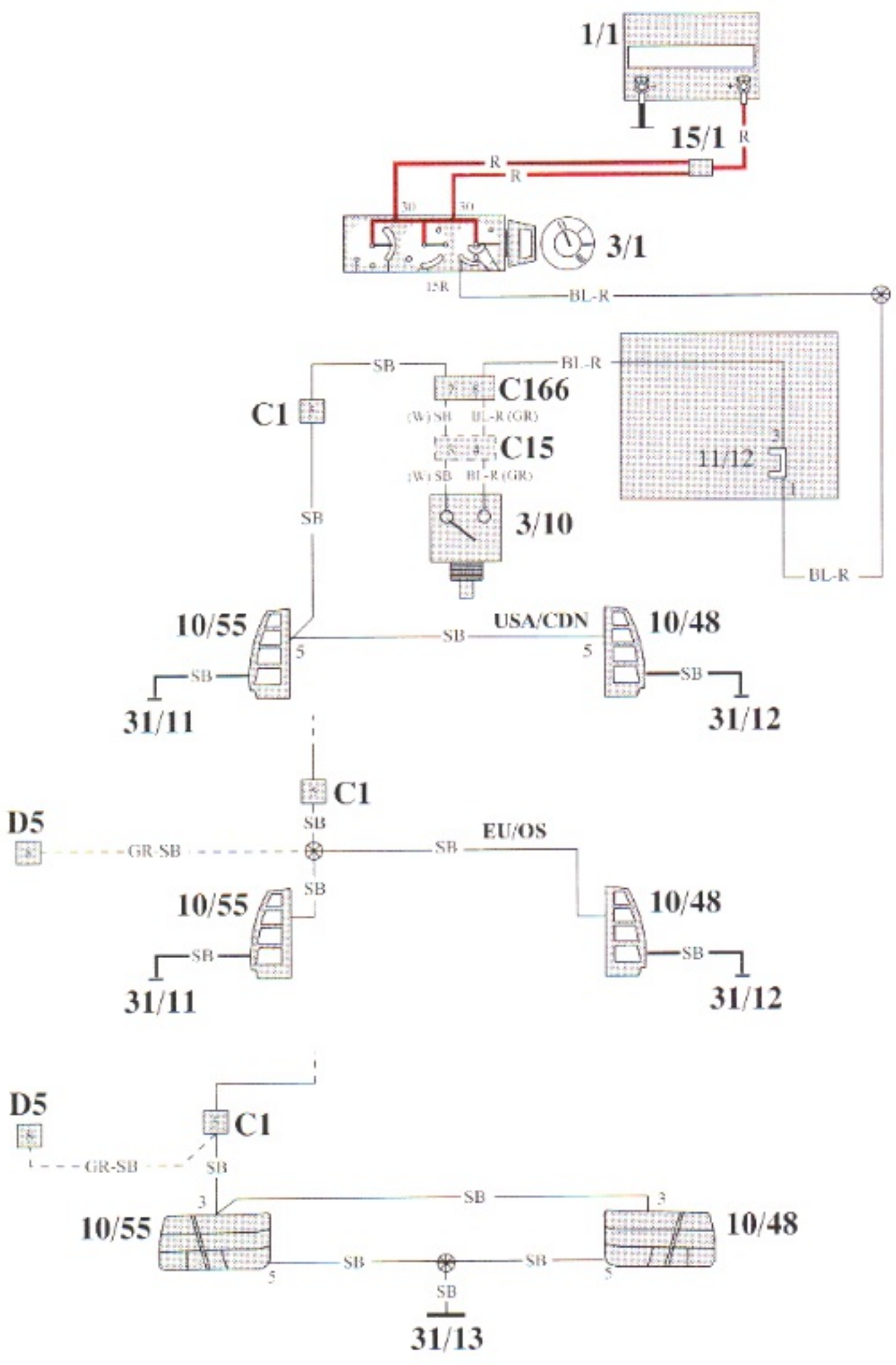

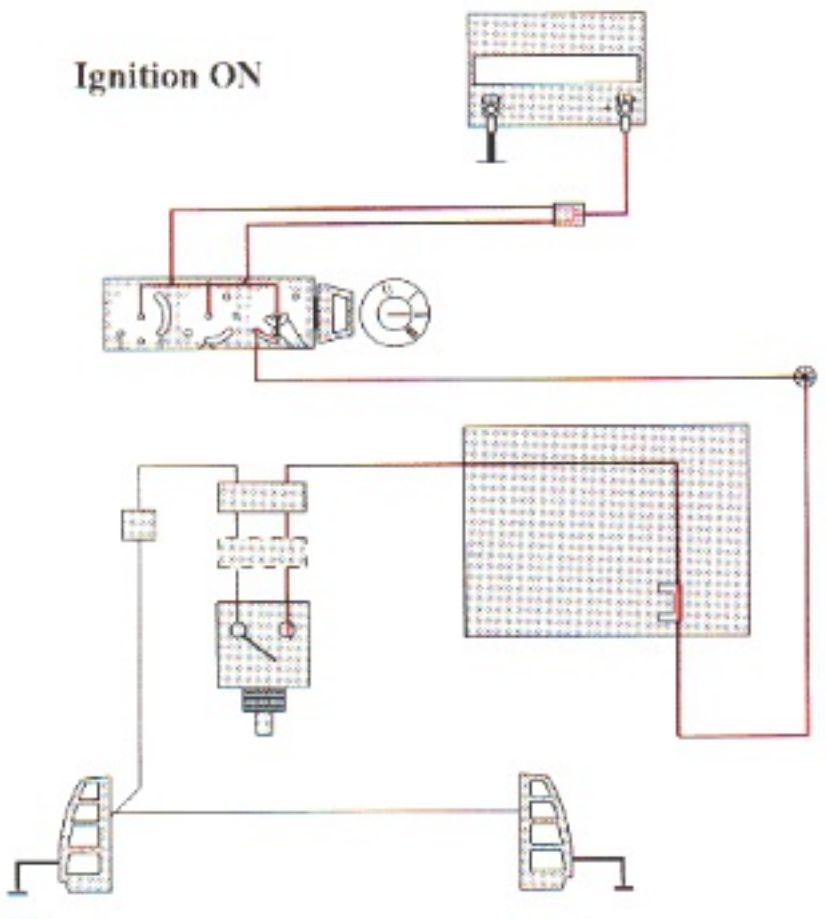

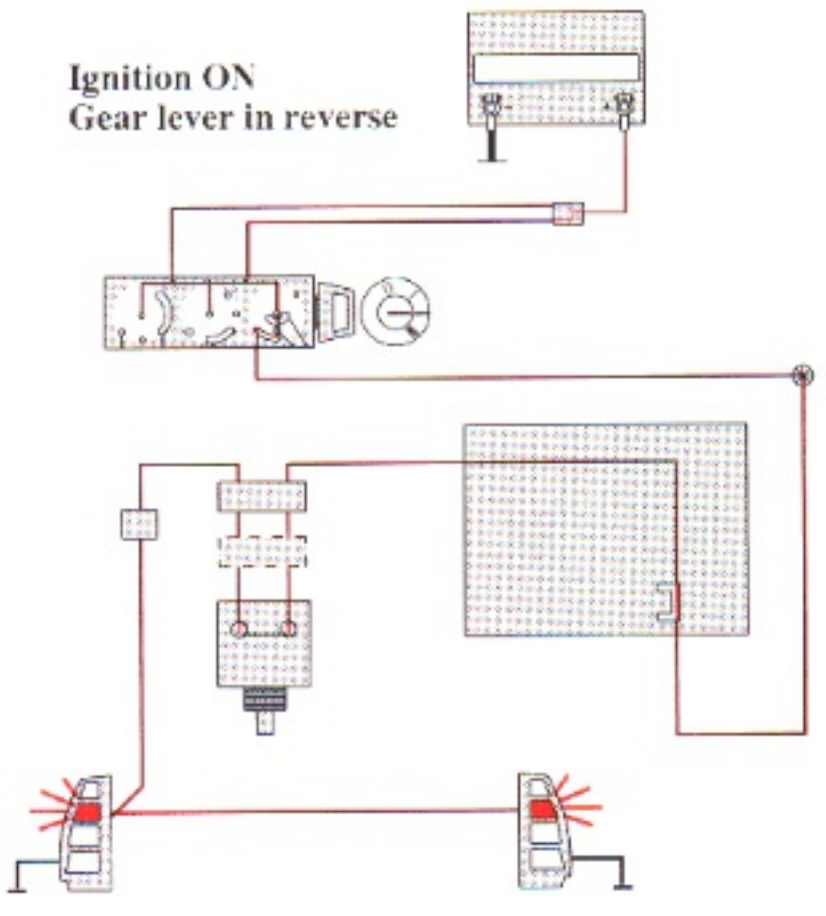

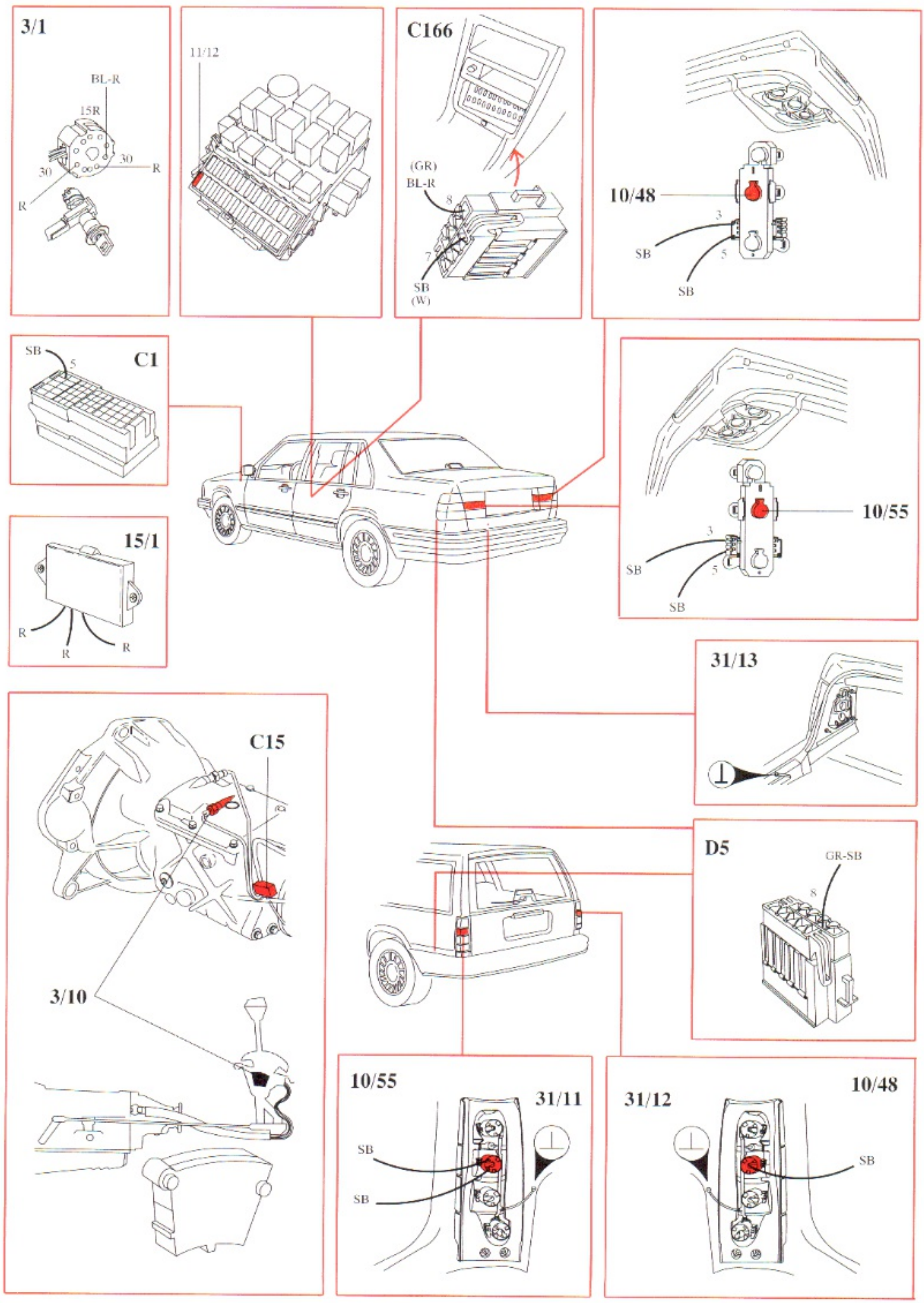
3/1
BL-R
15R
30
30
R
R
11/12
C166
(GR)
BL-R
8
7
SB
(W)
10/48
3
SB
5
SB
SB
5
C1
15/1
R
R
R
10/55
3
SB
5
SB
31/13
C15
3/10
D5
GR-SB
8
10/55
31/11
SB
SB
31/12
10/48
SB

Glove compartment and vanity mirror lighting

Glove compartment open

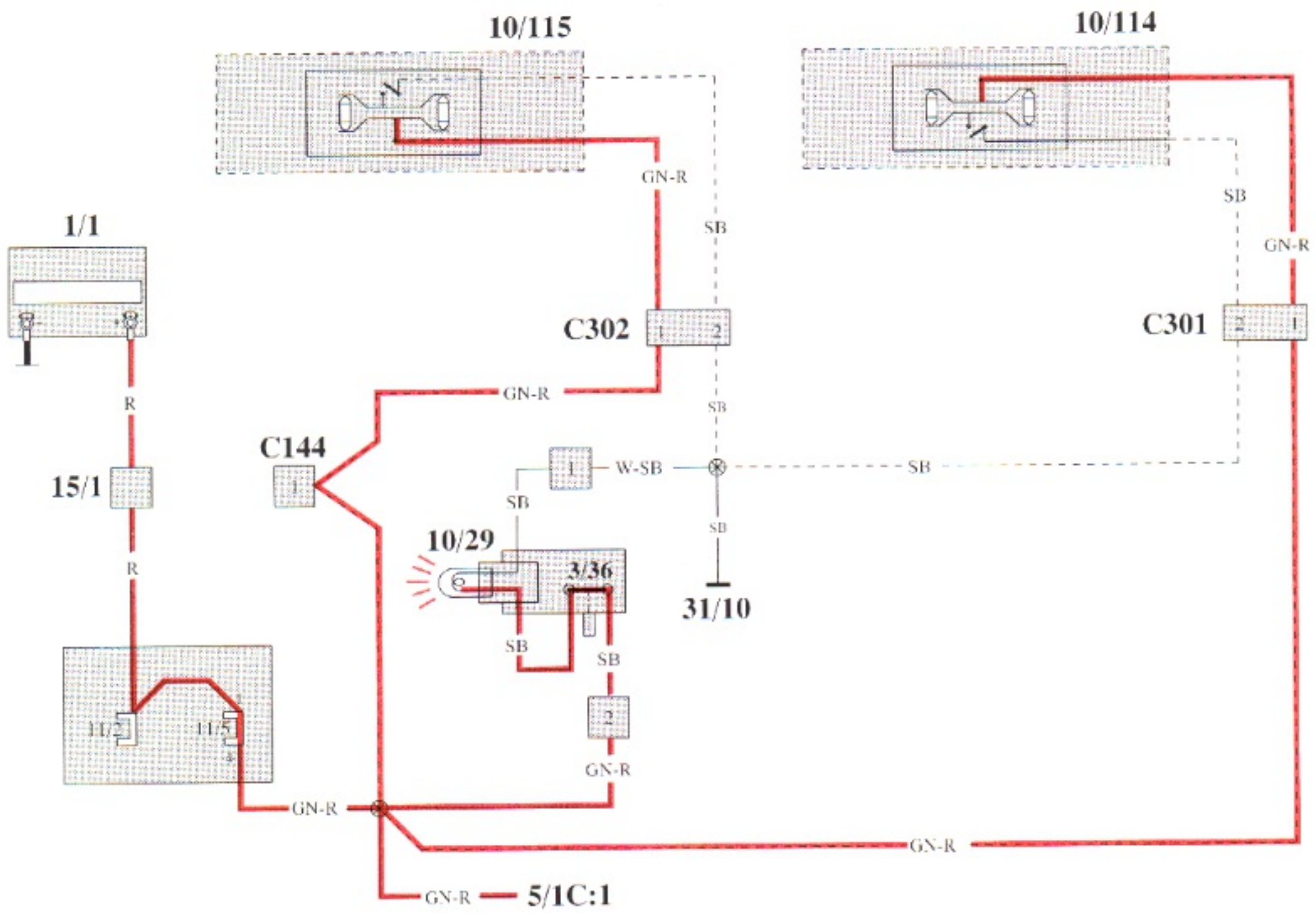

Vanity mirror light on

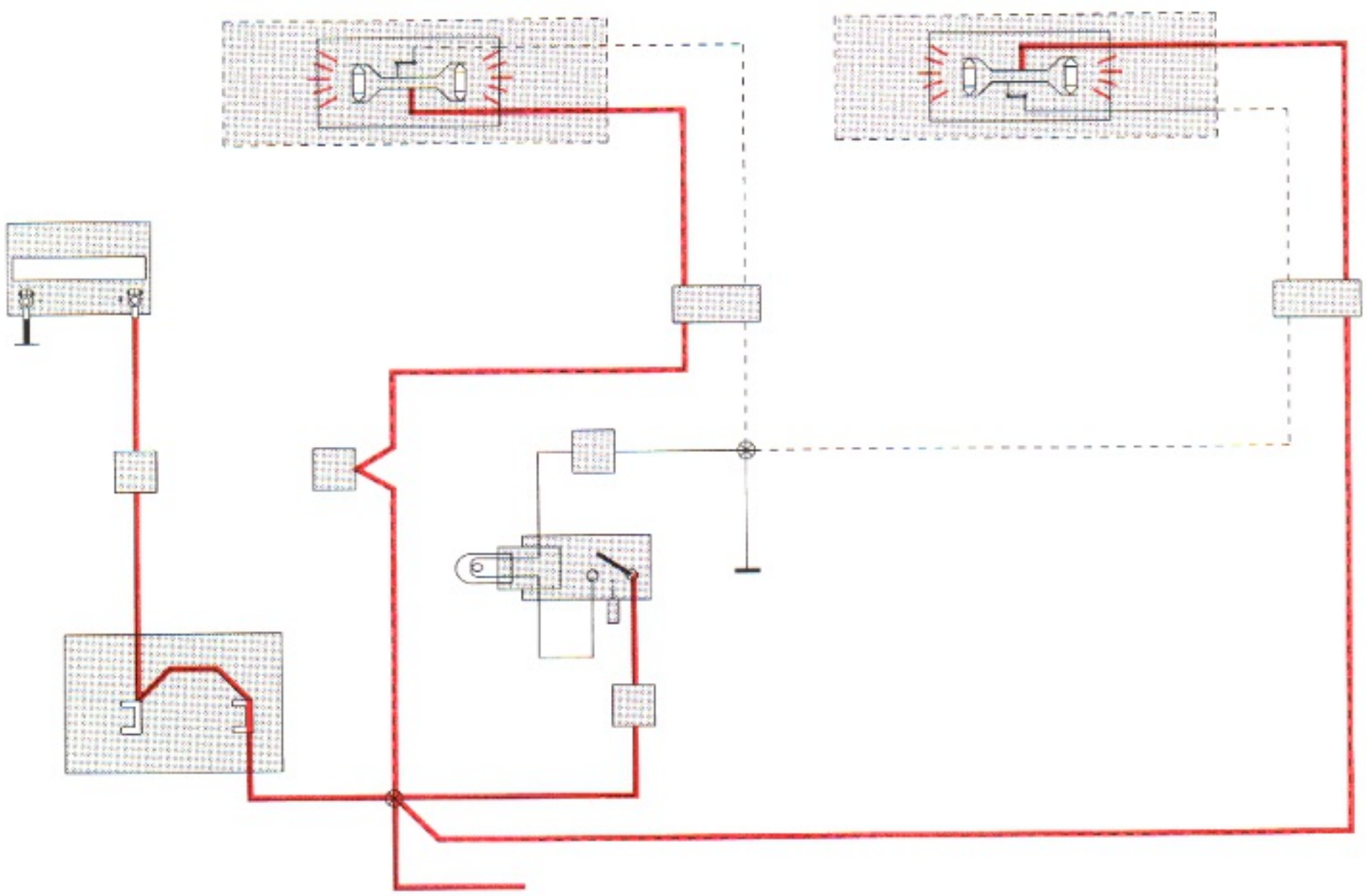

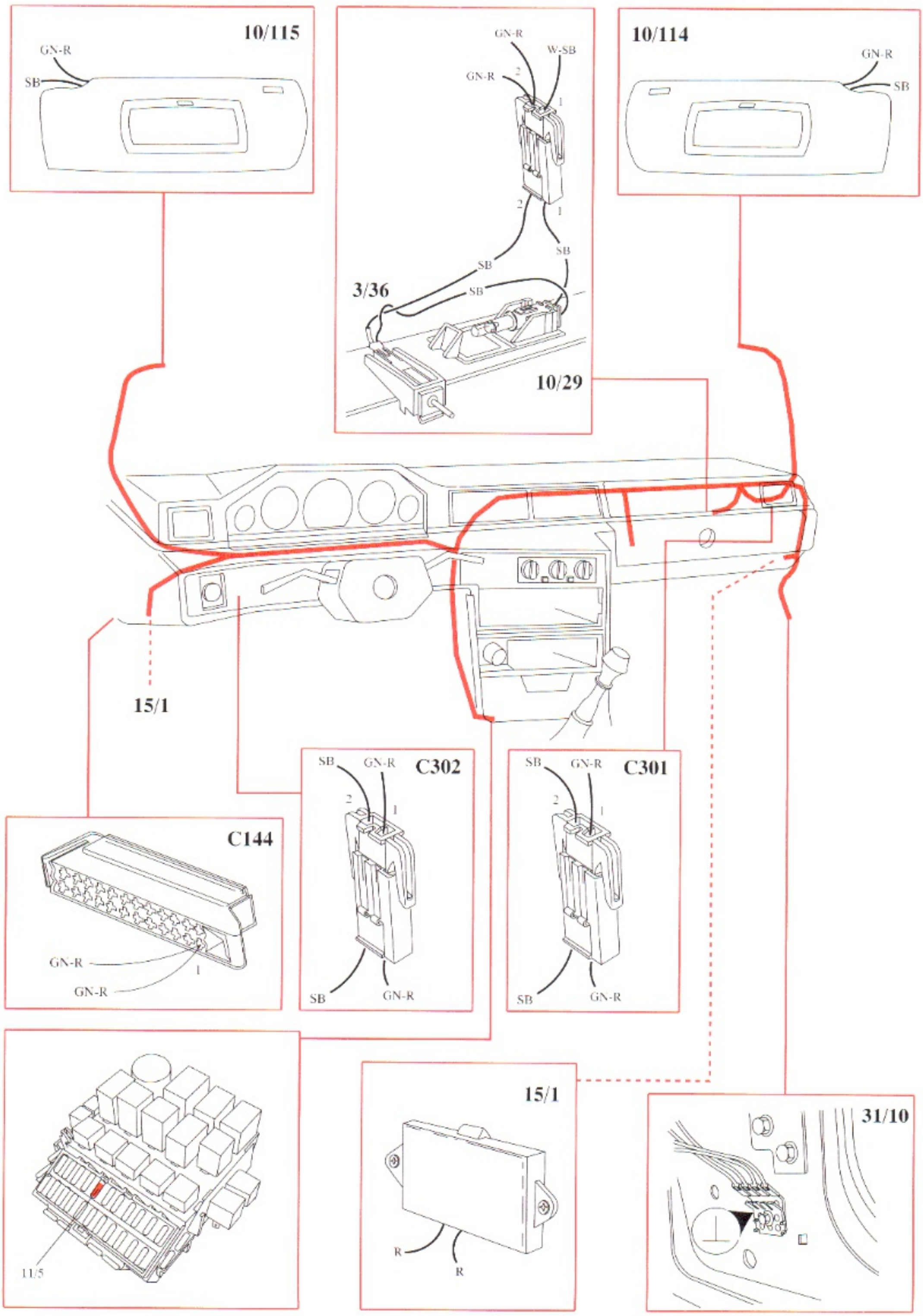
10/115
GN-R
SB
10/114
GN-R
SB
GN-R
W-SB
GN-R
2
1
2
1
SB
SB
SB
3/36
10/29
15/1
C144
GN-R
GN-R
1
C302
SB
GN-R
2
1
SB
GN-R
C301
SB
GN-R
2
1
SB
GN-R
11/5
15/1
R
R
31/10

Interior lighting

Doors shut, all lights off

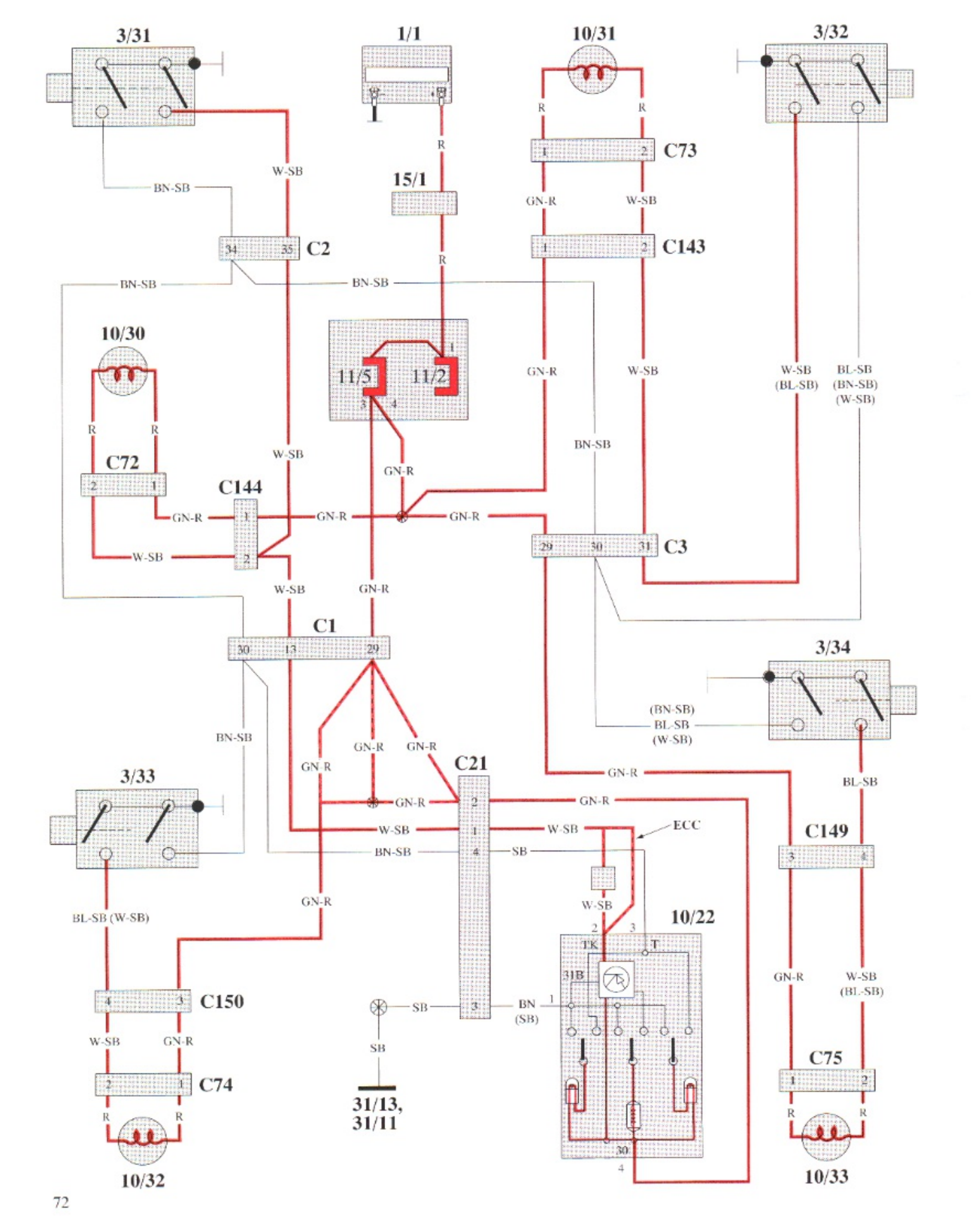

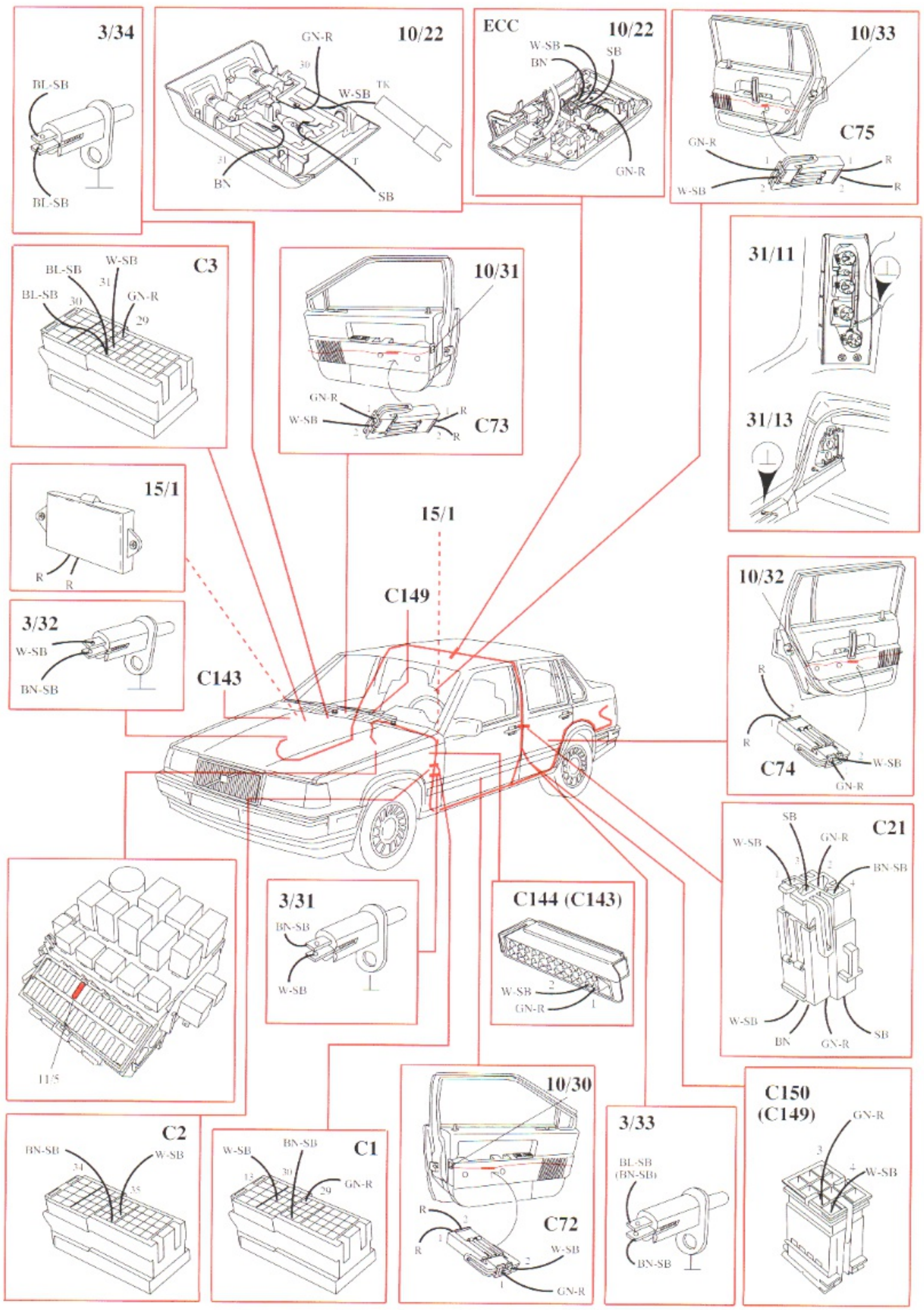
3/34
BL-SB
BL-SB
10/22
GN-R
30
W-SB
TK
31
BN
T
SB
ECC
10/22
W-SB
BN
SB
GN-R
10/33
C75
GN-R
W-SB
R
R
C3
BL-SB
W-SB
BL-SB
30
31
GN-R
29
10/31
GN-R
W-SB
C73
31/11
31/13
15/1
R
R
15/1
C149
3/32
W-SB
BN-SB
C143
10/32
R
R
C74
W-SB
GN-R
C21
SB
W-SB
GN-R
BN-SB
W-SB
BN
GN-R
SB
11/5
3/31
BN-SB
W-SB
C144 (C143)
W-SB
GN-R
C2
BN-SB
W-SB
34
35
C1
W-SB
BN-SB
13
30
29
GN-R
10/30
C72
R
R
W-SB
GN-R
3/33
BL-SB
(BN-SB)
BN-SB
C150
(C149)
GN-R
3
4
W-SB

Trunk light

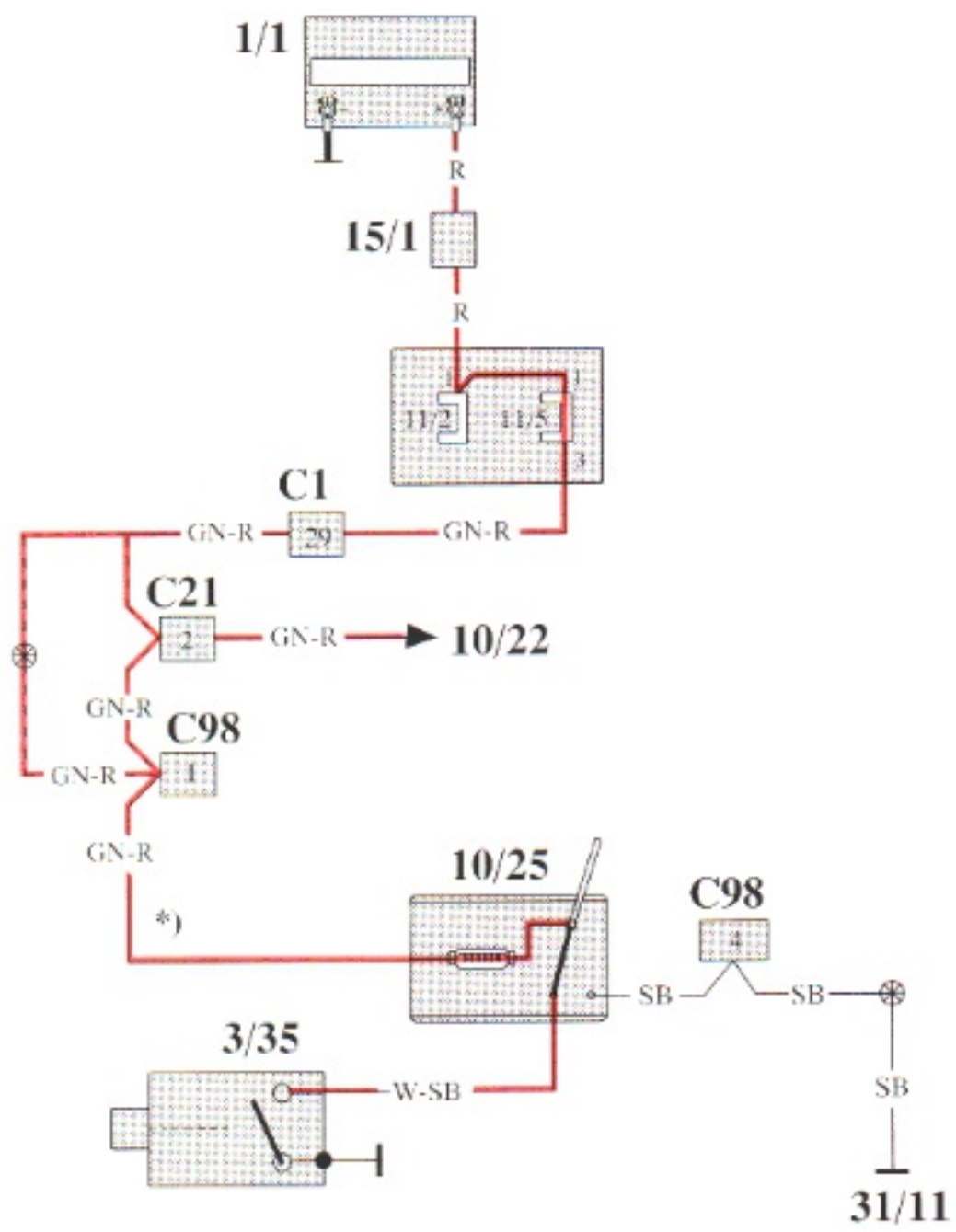

Trunk lid shut
all lights off

*) 5-door
**) 4-door

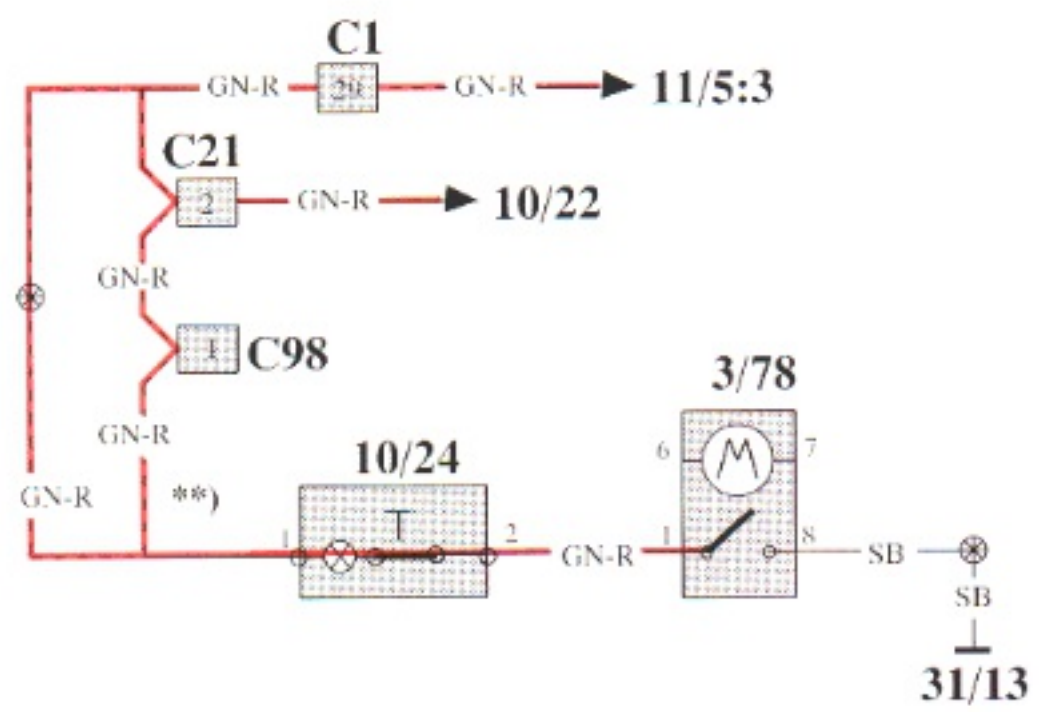

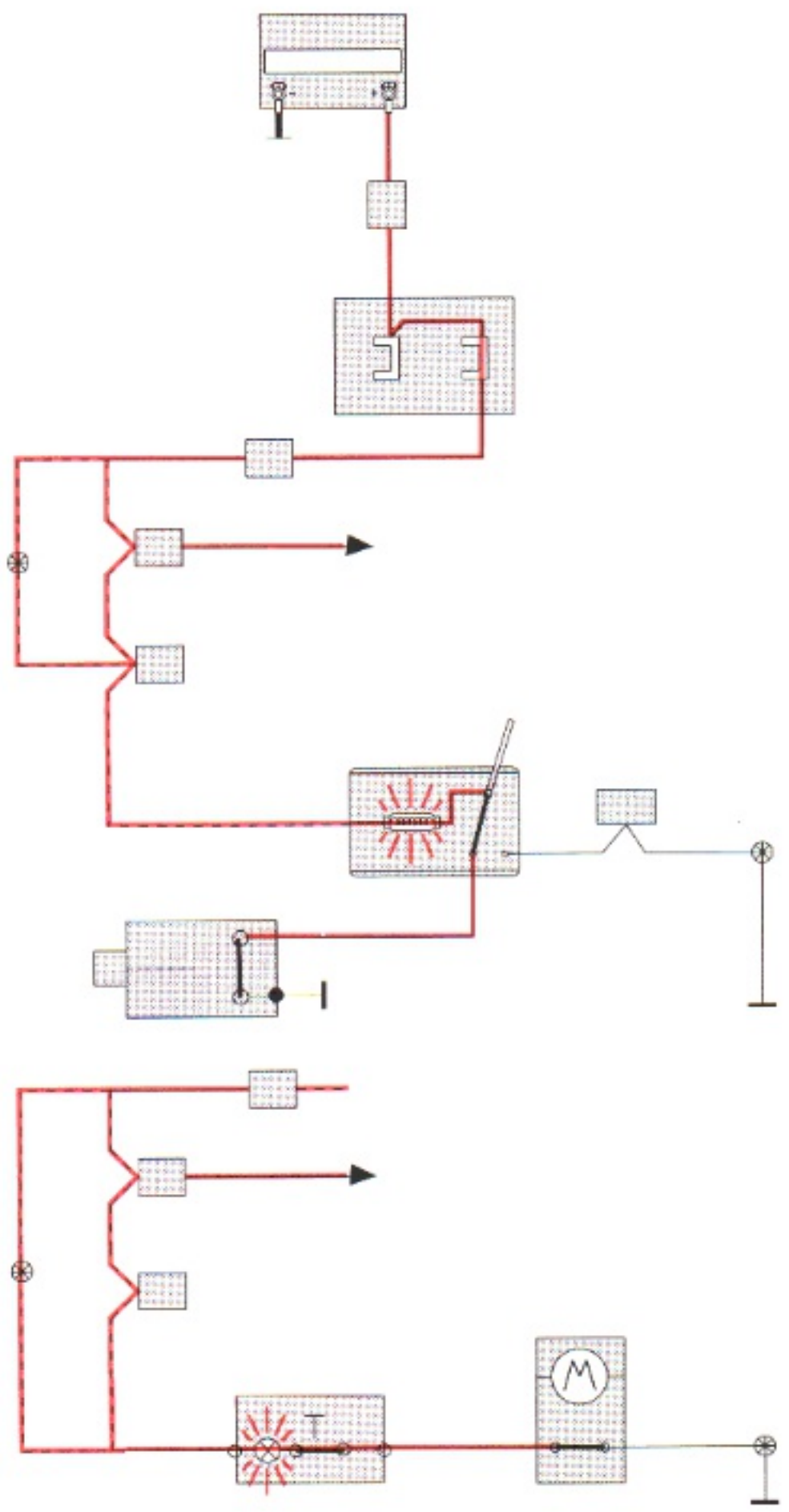

Trunk open

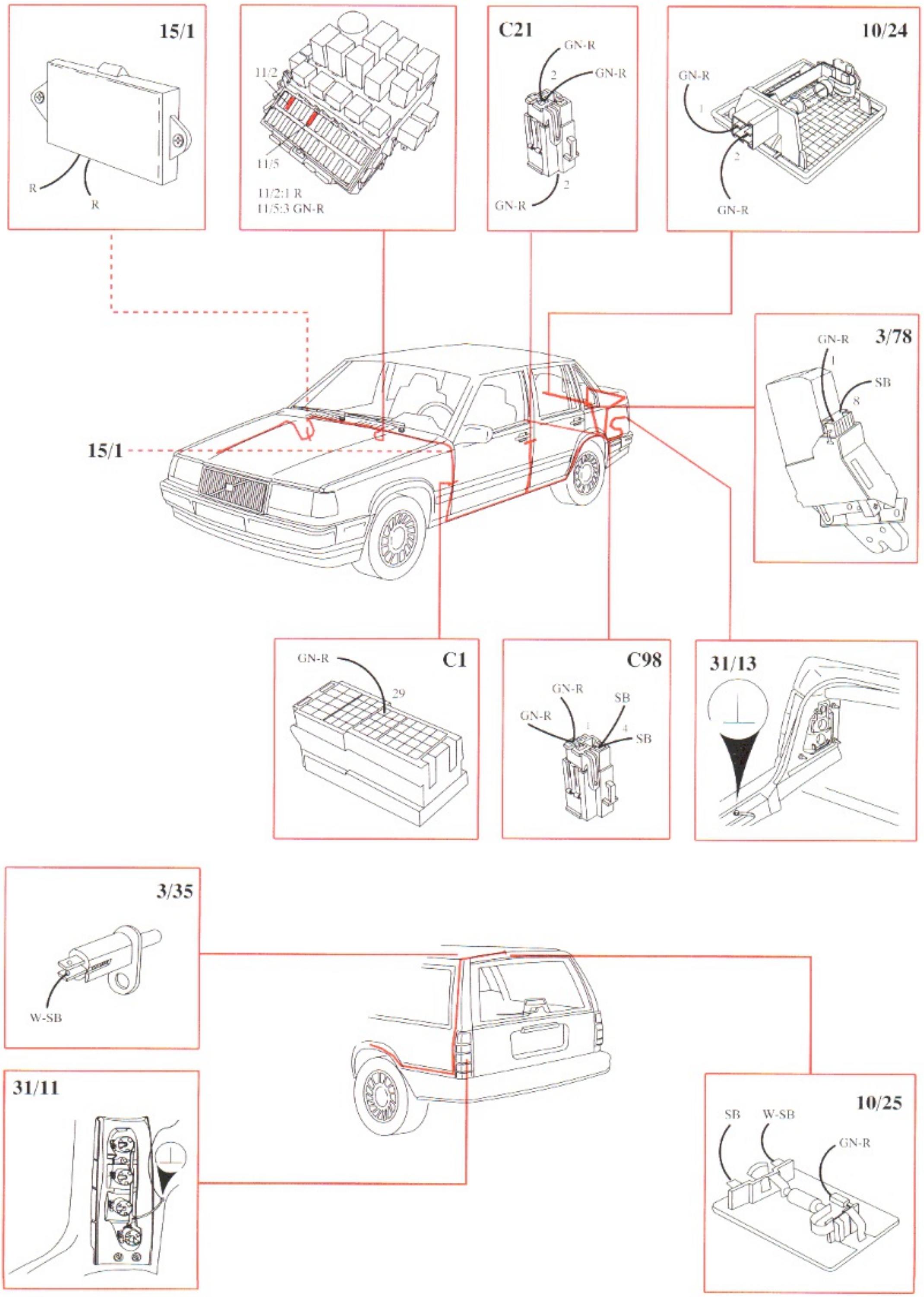
15/1
R
R
11/2
11/5
11/2:1 R
11/5:3 GN-R
C21
GN-R
2
GN-R
2
GN-R
10/24
GN-R
1
2
GN-R
3/78
GN-R
1
SB
8
15/1
C1
GN-R
29
C98
GN-R
GN-R
SB
1
4
SB
31/13
3/35
W-SB
31/11
10/25
SB
W-SB
GN-R

Instrument and control panel lights

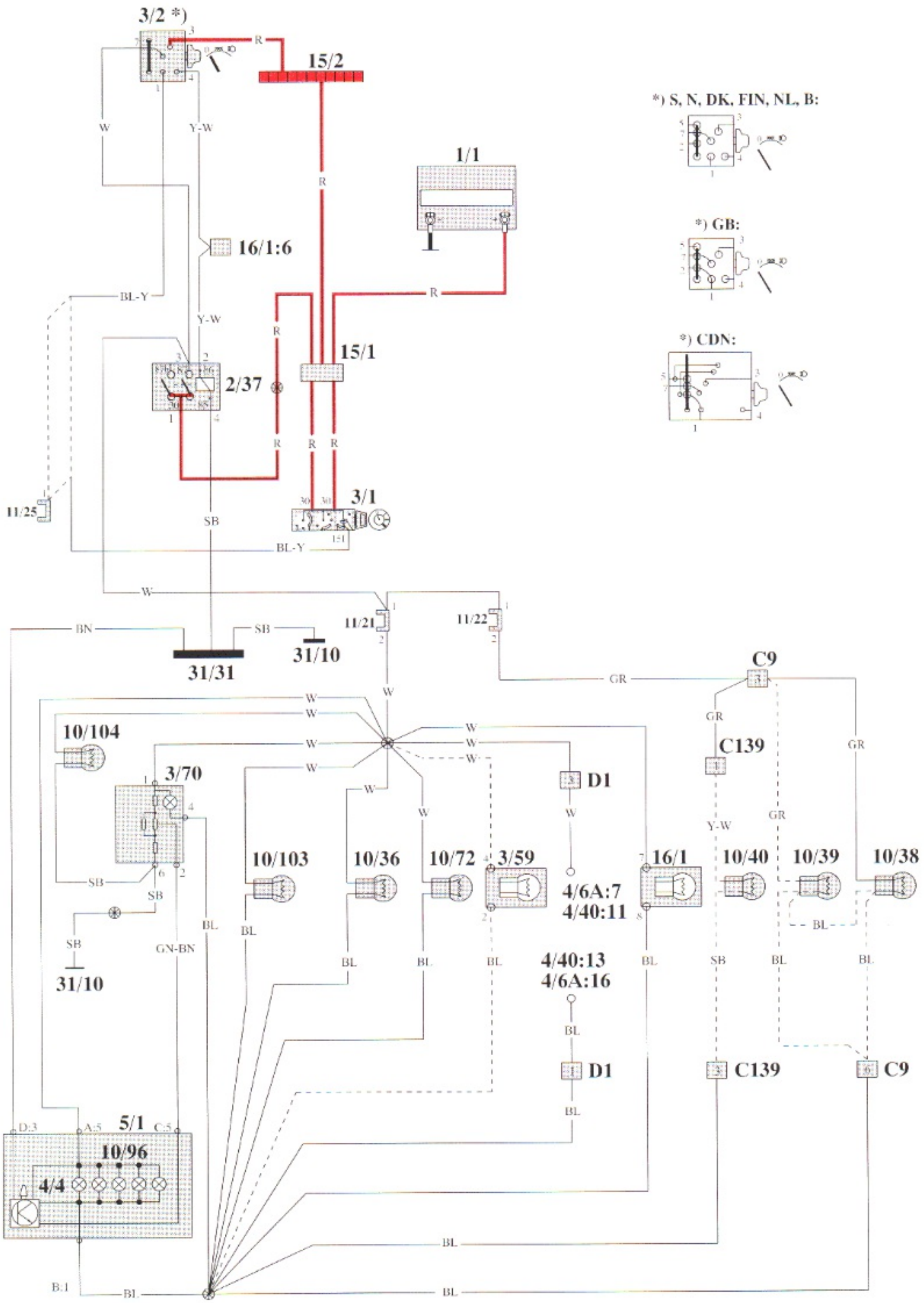

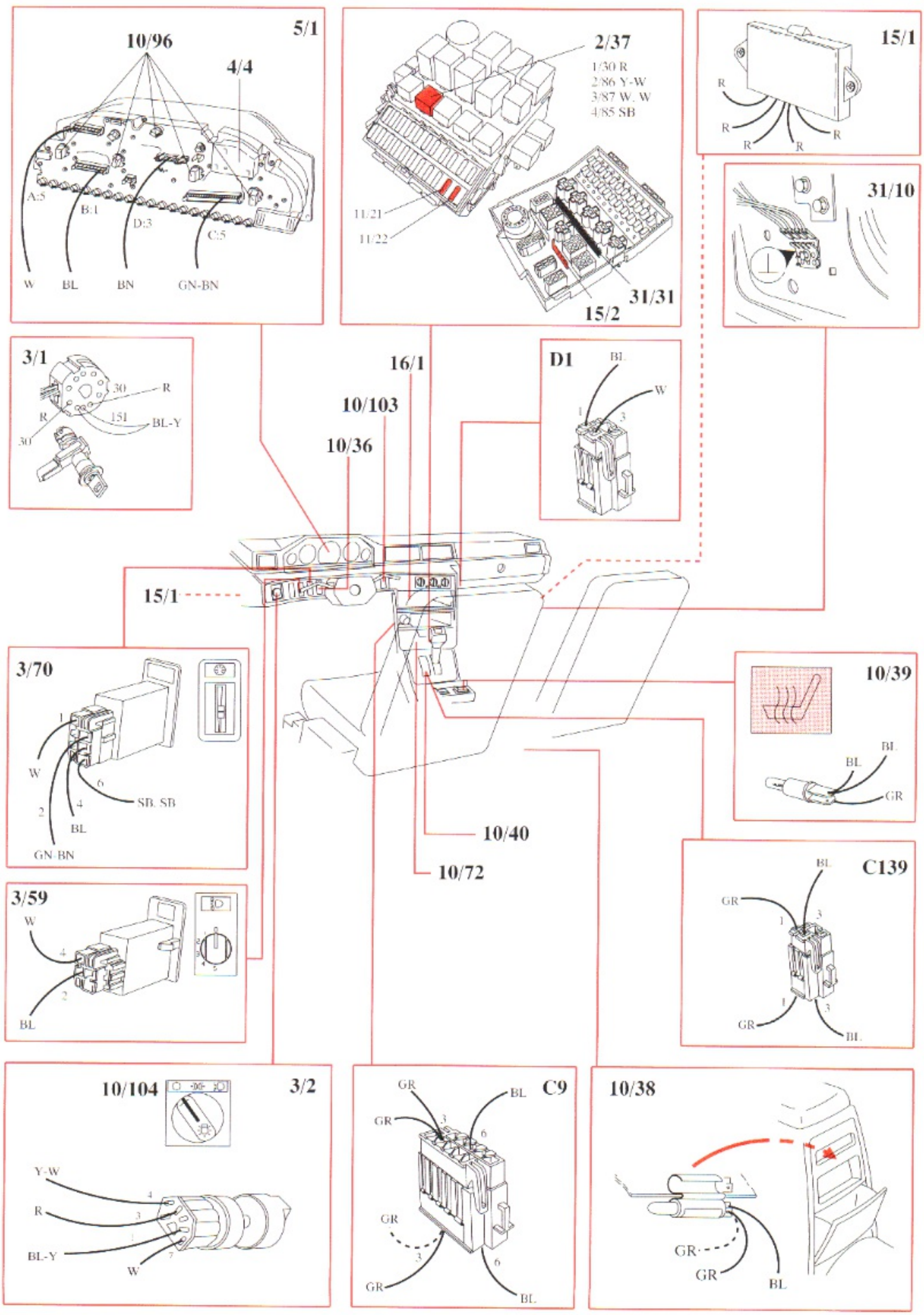
5/1
10/96
4/4
A:5
B:1
D:3
C:5
W
BL
BN
GN-BN
2/37
1/30 R
2/86 Y-W
3/87 W, W
4/85 SB
11/21
11/22
15/2
31/31
15/1
R
31/10
3/1
30
R
151
BL-Y
D1
BL
W
16/1
10/103
10/36
15/1
3/70
W
SB, SB
BL
GN-BN
10/39
BL
GR
10/40
10/72
C139
GR
BL
3/59
W
BL
10/104
3/2
Y-W
R
BL-Y
W
C9
GR
BL
10/38
GR
BL

Foglights

Switch, high/low beam (3/5) in low-beam position and with both front and rear foglights on

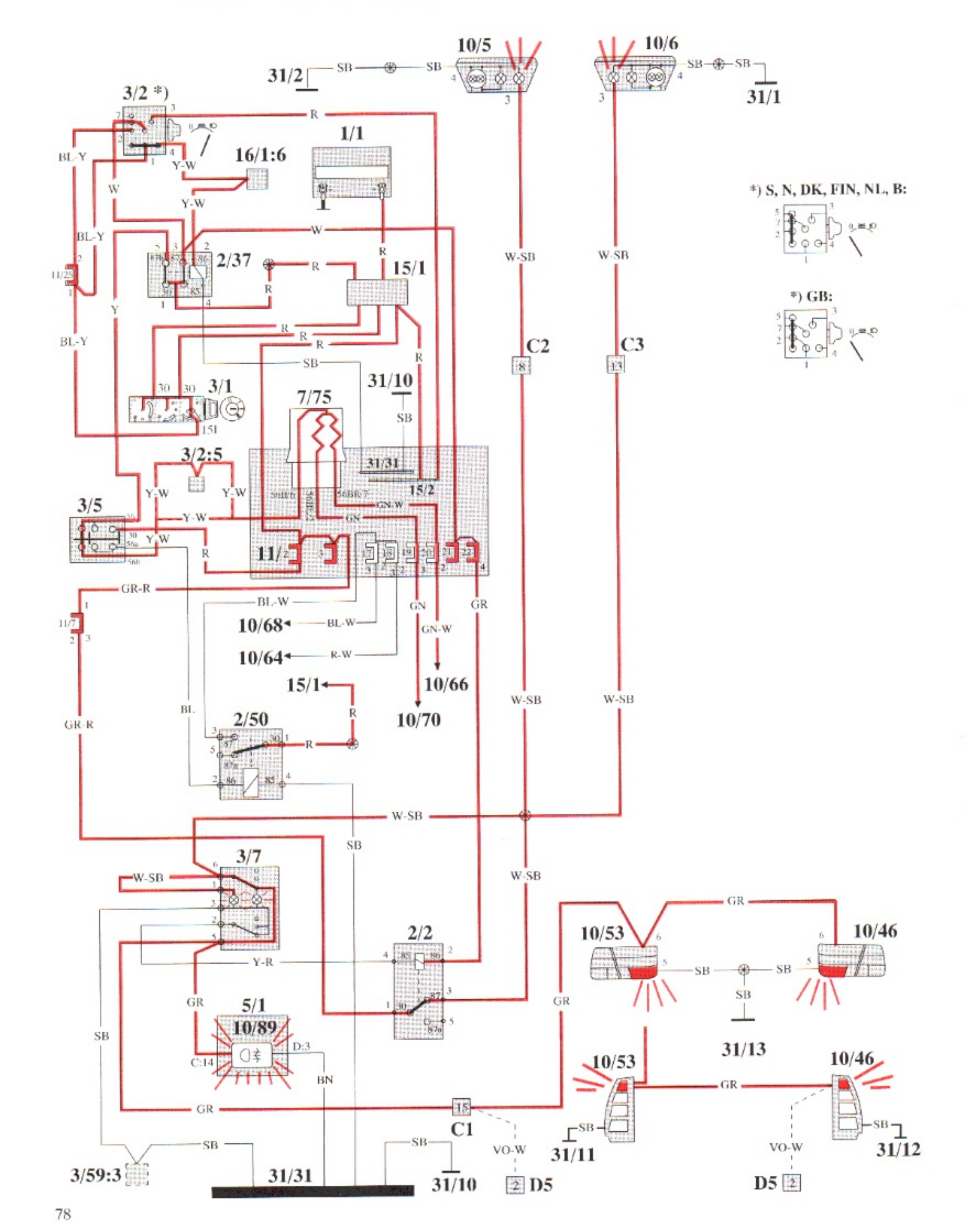

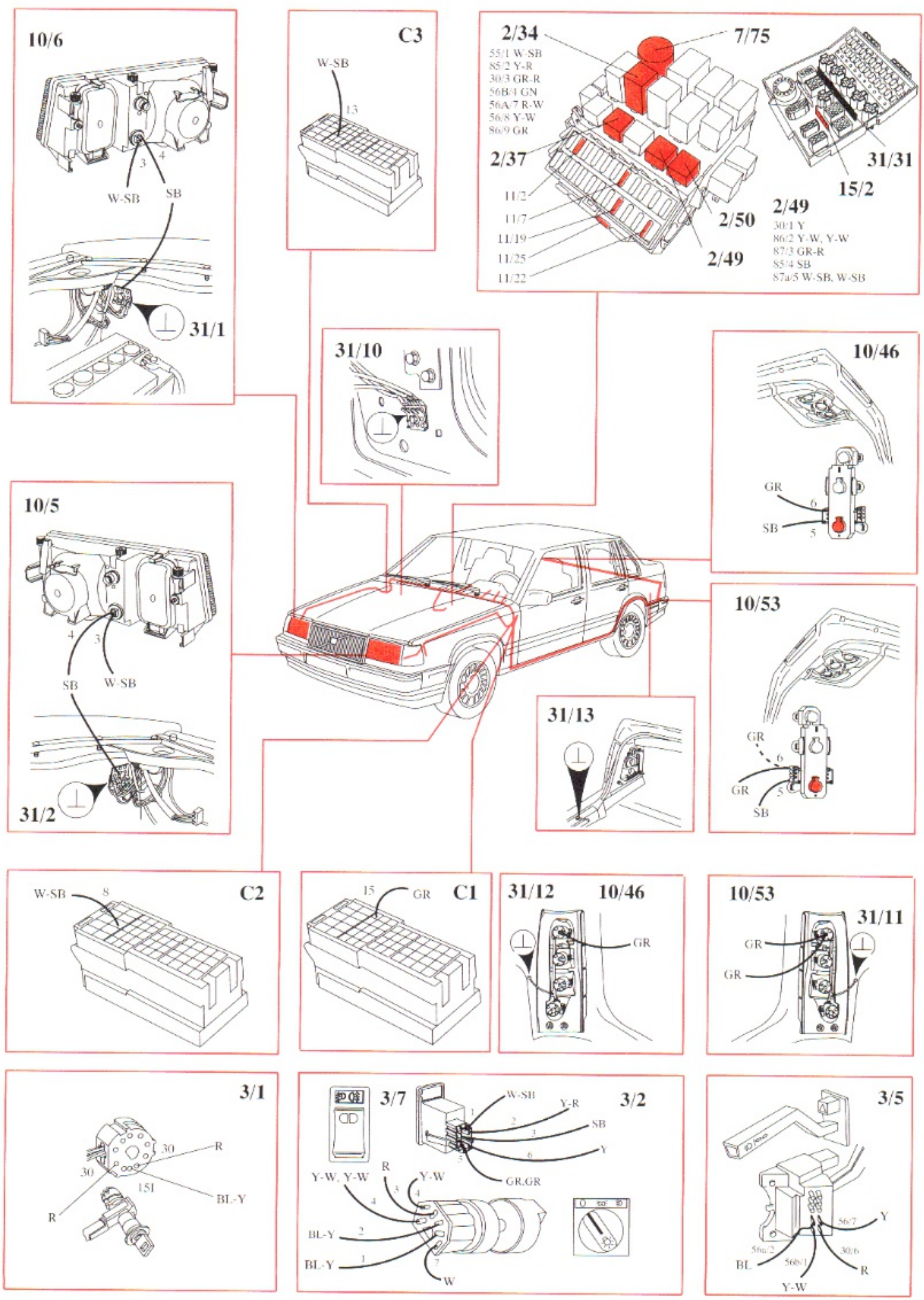
10/6
W-SB
SB
31/1
C3
W-SB
13
2/34
55/1 W-SB
85/2 Y-R
30/3 GR-R
56B/4 GN
56A/7 R-W
56/8 Y-W
86/9 GR
7/75
2/37
11/2
11/7
11/19
11/25
11/22
2/50
2/49
31/31
15/2
2/49
30/1 Y
86/2 Y-W, Y-W
87/3 GR-R
85/4 SB
87a/5 W-SB, W-SB
31/10
10/46
GR
SB
10/5
SB
W-SB
31/2
31/13
10/53
GR
GR
SB
C2
W-SB
8
C1
15
GR
31/12
10/46
GR
10/53
31/11
GR
GR
3/1
30
R
30
151
BL-Y
R
3/7
3/2
W-SB
Y-R
SB
Y
GR.GR
Y-W, Y-W
R
Y-W
BL-Y
BL-Y
W
3/5
56/7
Y
56a/2
30/6
BL
56b/1
R
Y-W

Foglights, Japan, Saudi Arabia, Taiwan and Overseas

Switch 3/5 for high/low beam, in high-beam position and front foglights and rear foglights on. Both the front and rear foglights light up. (With switch 3/5 in low-beam position, only the rear foglights light up)

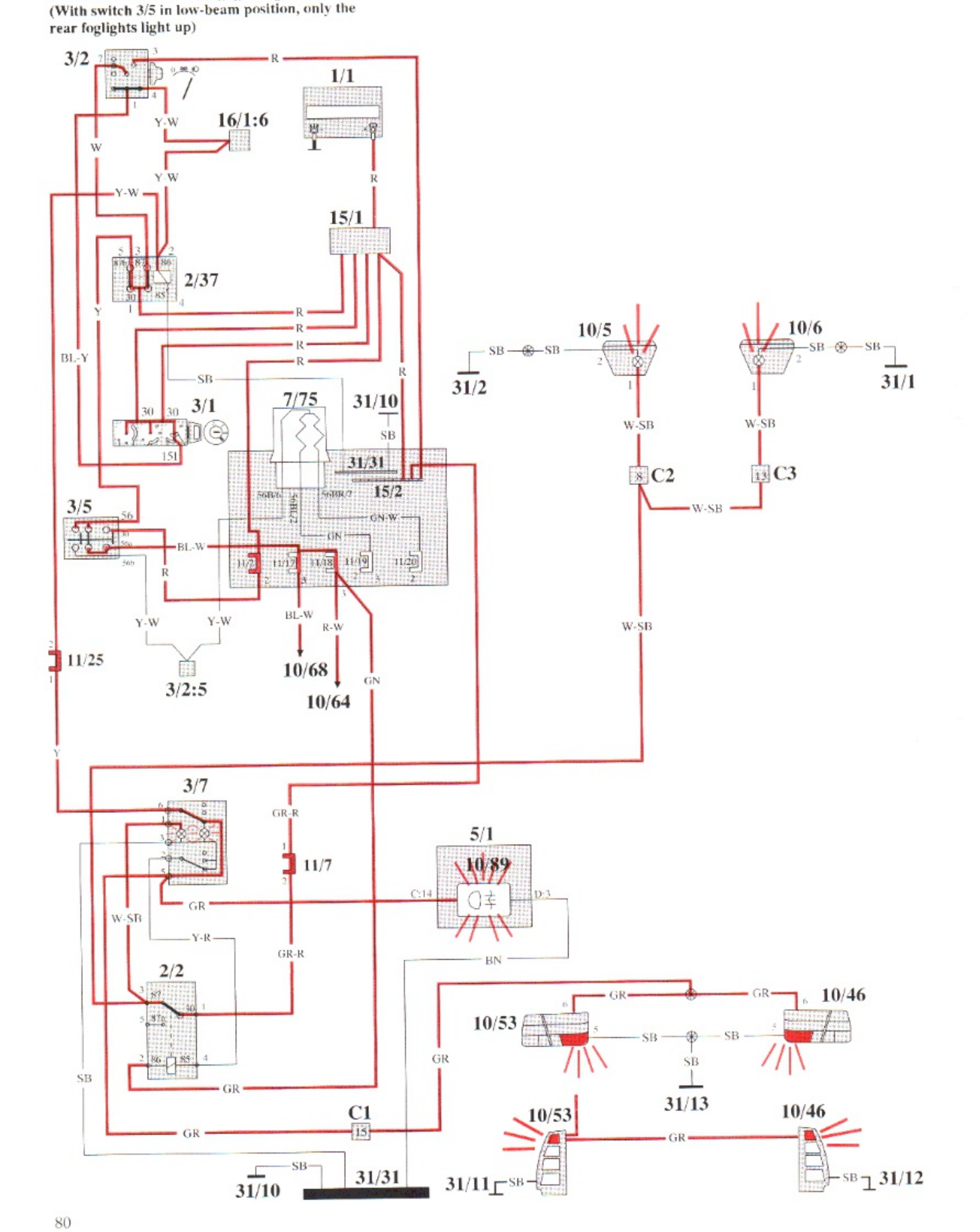

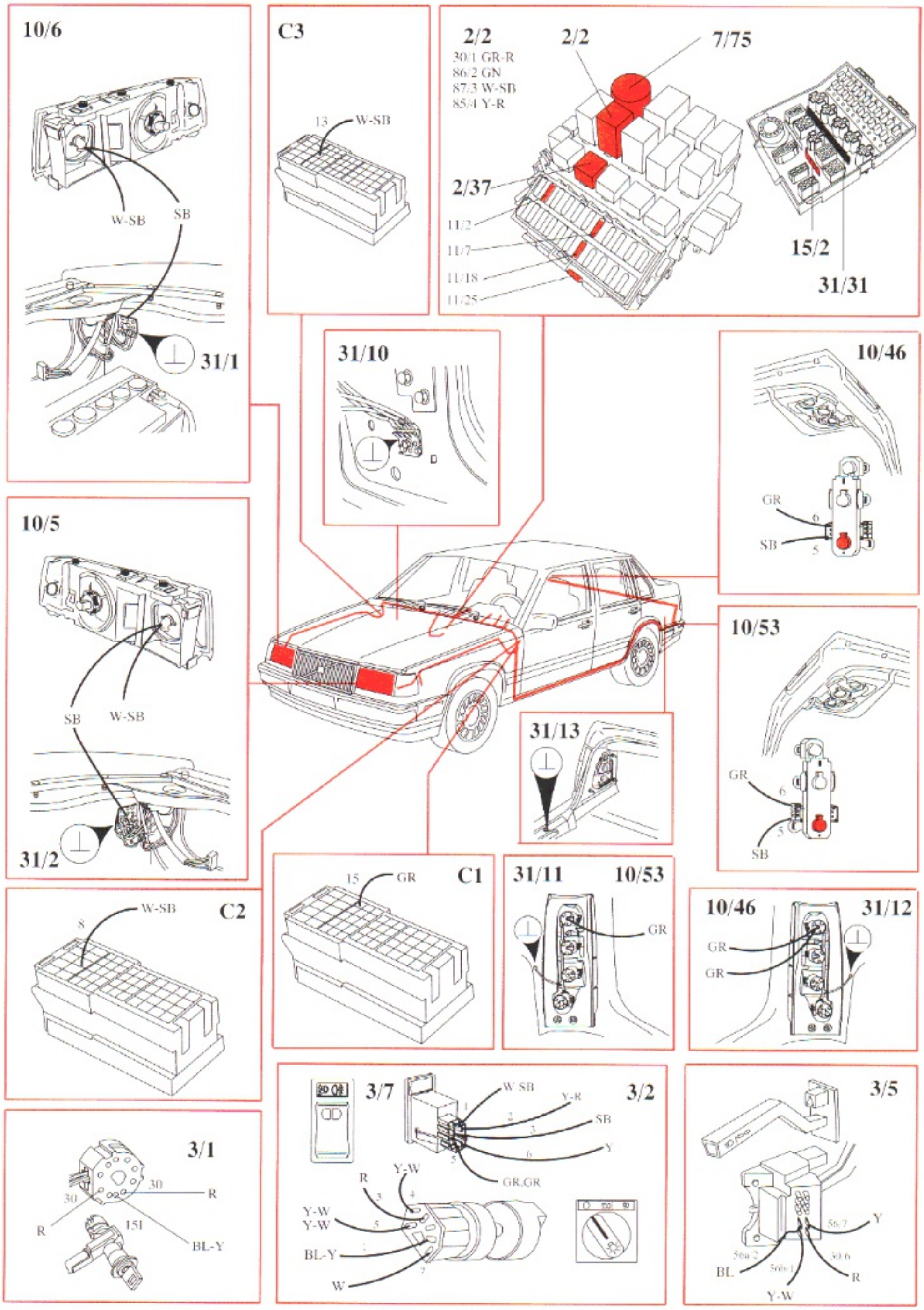
10/6
W-SB
SB
31/1
C3
13
W-SB
2/2
30/1 GR-R
86/2 GN
87/3 W-SB
85/4 Y-R
2/2
7/75
2/37
11/2
11/7
11/18
11/25
15/2
31/31
31/10
10/46
GR
SB
10/5
SB
W-SB
31/2
31/13
10/53
GR
SB
C1
15
GR
31/11
10/53
GR
10/46
31/12
GR
GR
C2
8
W-SB
3/7
3/2
W SB
Y-R
SB
Y
GR,GR
R
Y-W
Y-W
Y-W
BL-Y
W
3/5
Y
BL
R
Y-W
3/1
30
30
R
R
15I
BL-Y

Foglights, USA, Canada

Switch 3/5 for high/low beam, in low-beam position and front foglights and rear foglights on. Both the front and rear foglights light up. (With switch 3/5 in high-beam position, only the rear foglights light up)

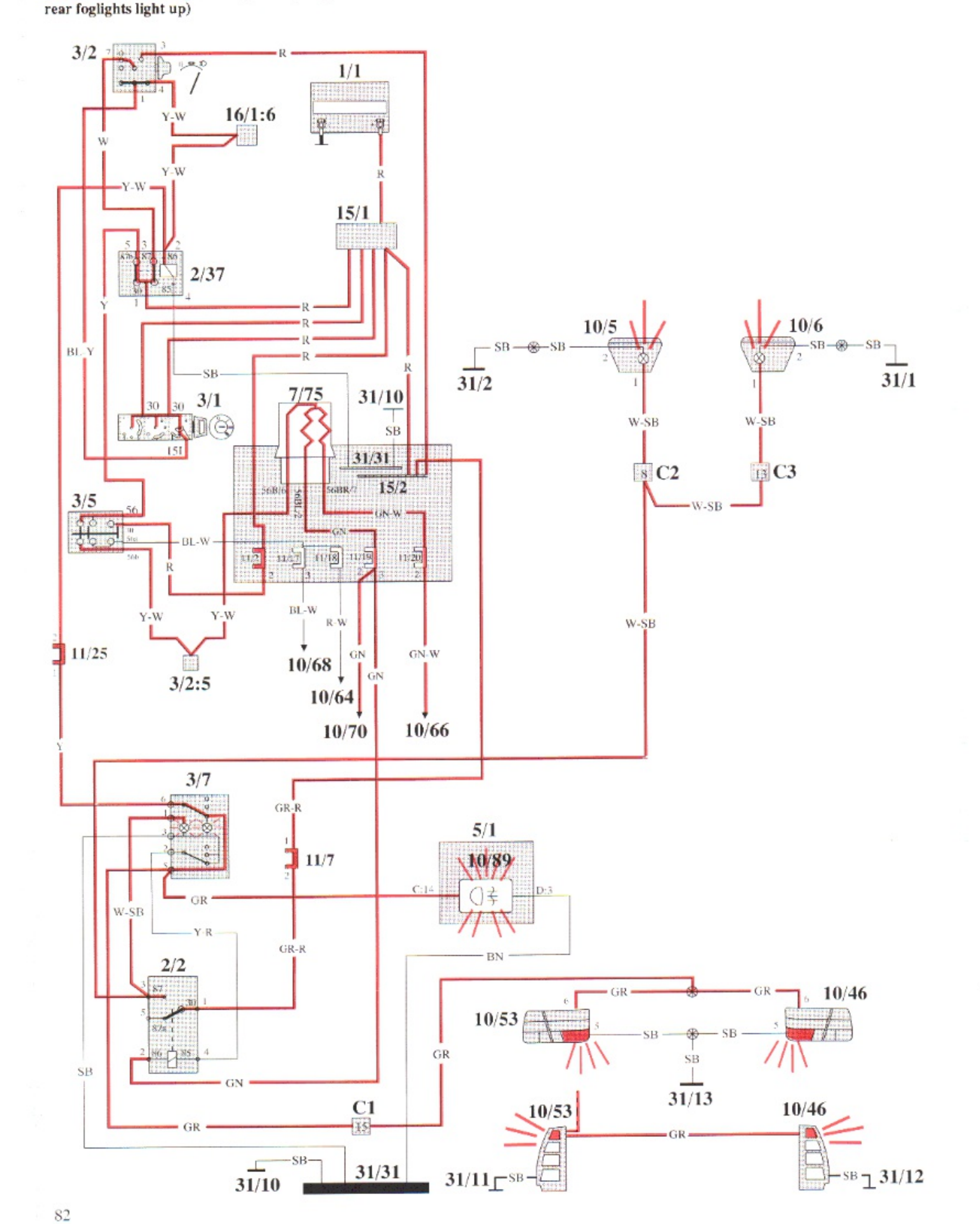

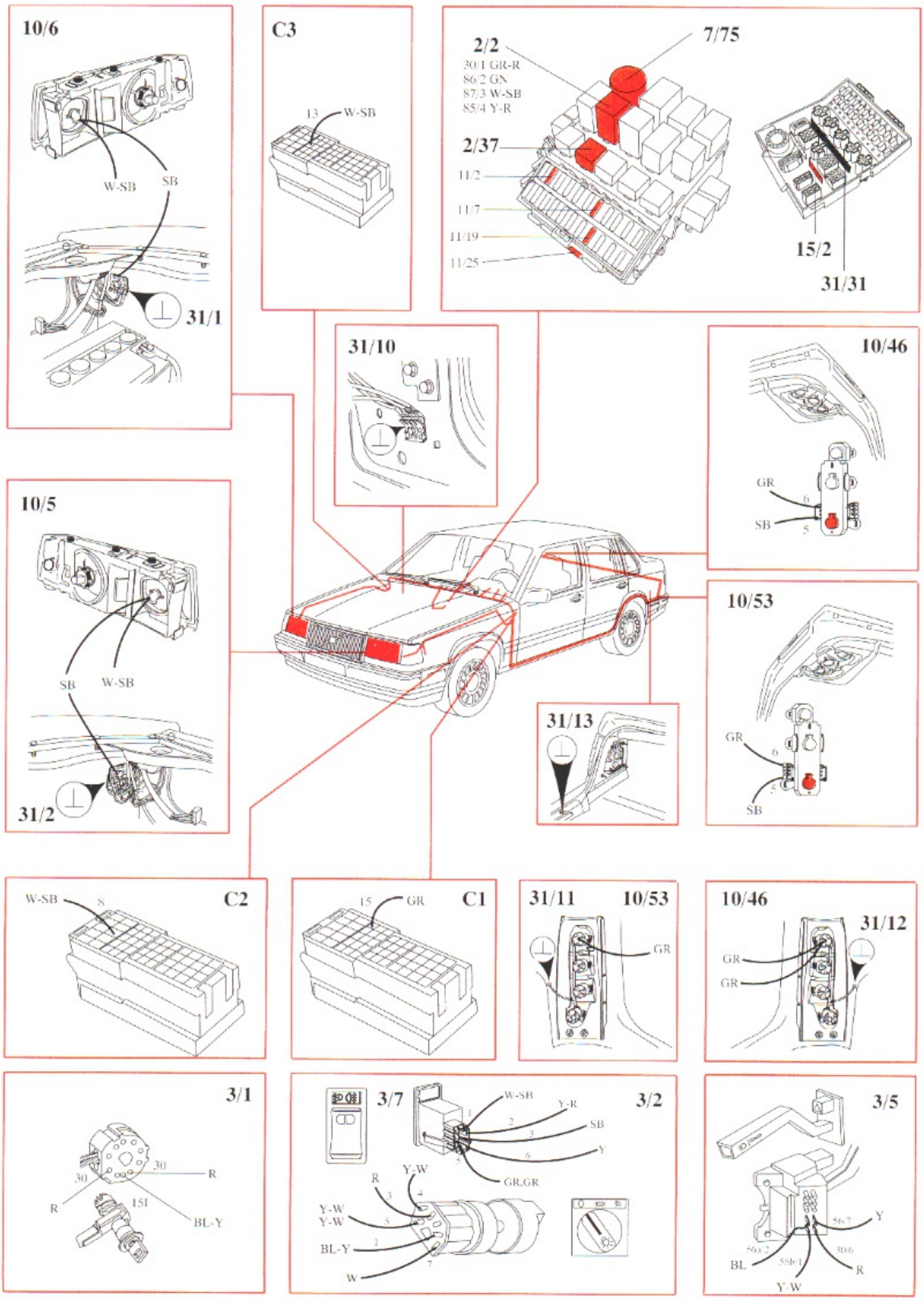
10/6
W-SB
SB
31/1
C3
13
W-SB
2/2
30/1 GR-R
86/2 GN
87/3 W-SB
85/4 Y-R
7/75
2/37
11/2
11/7
11/19
11/25
15/2
31/31
31/10
10/46
GR
SB
10/5
SB
W-SB
31/2
31/13
10/53
GR
SB
C2
W-SB
8
C1
15
GR
31/11
10/53
GR
10/46
31/12
GR
GR
3/1
30
30
R
R
15I
BL-Y
3/7
W-SB
Y-R
SB
Y
GR.GR
R
Y-W
Y-W
Y-W
BL-Y
W
3/2
3/5
Y
BL
R
Y-W

Rear foglights (USA, Canada)

Ignition in position II
Headlights on

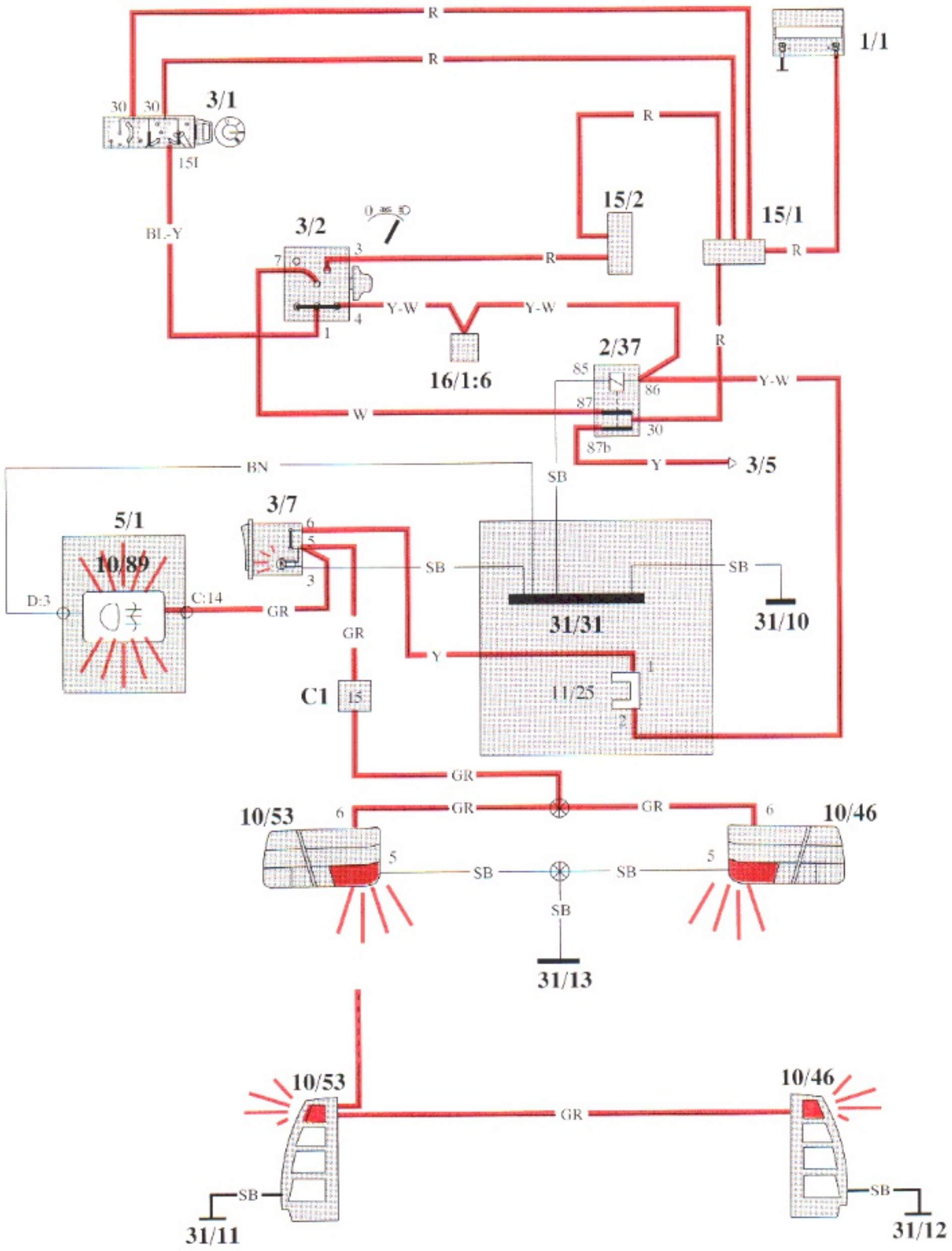

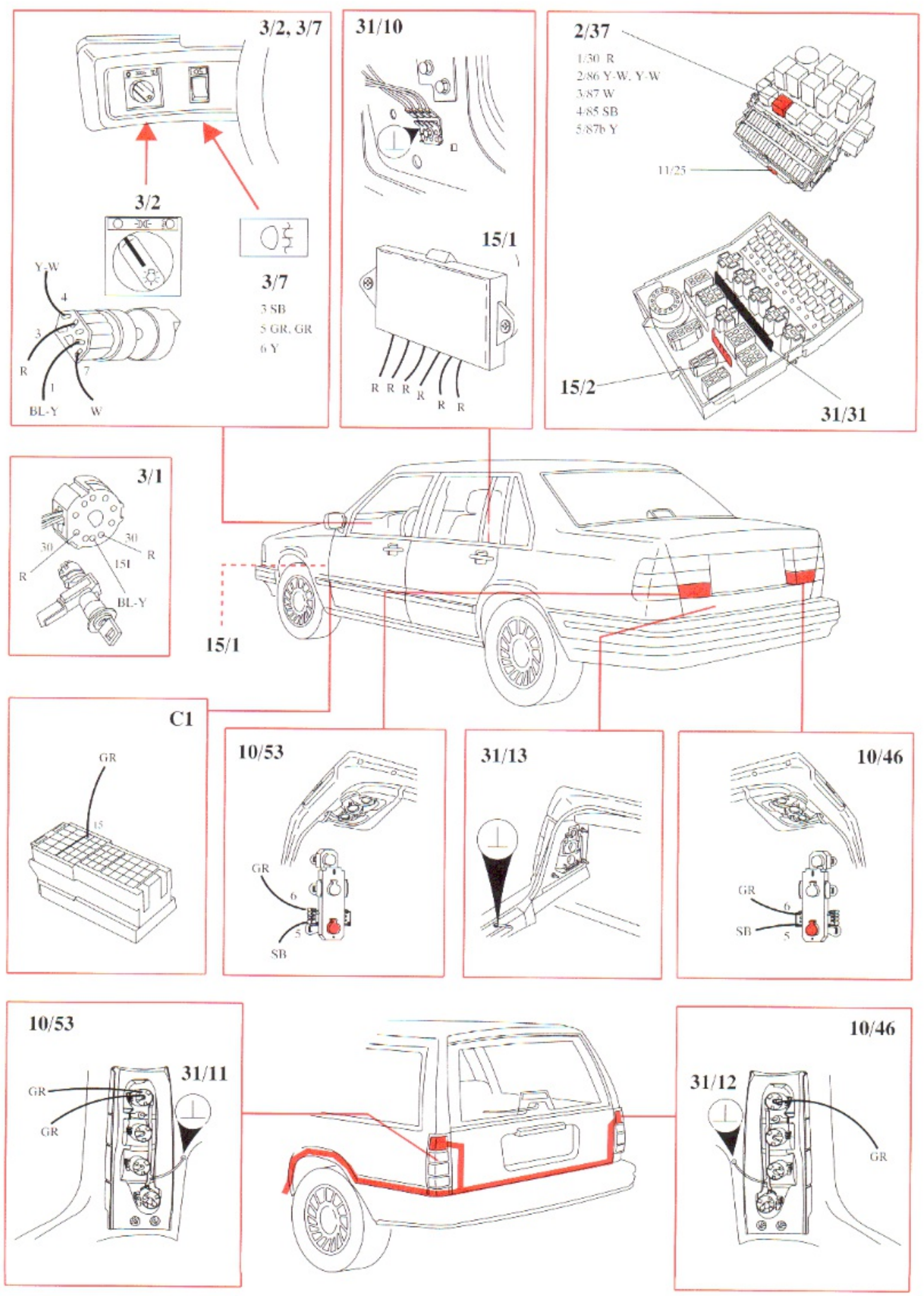
3/2, 3/7
3/2
Y-W
4
3
R
1
BL-Y
7
W
3/7
3 SB
5 GR, GR
6 Y
31/10
15/1
R R R R R R
2/37
1/30 R
2/86 Y-W, Y-W
3/87 W
4/85 SB
5/87b Y
11/25
15/2
31/31
3/1
30
30
R
R
15I
BL-Y
15/1
C1
GR
15
10/53
GR
6
5
SB
31/13
10/46
GR
6
SB
5
10/53
31/11
GR
GR
10/46
31/12
GR

Turn signals and hazard warning flashers

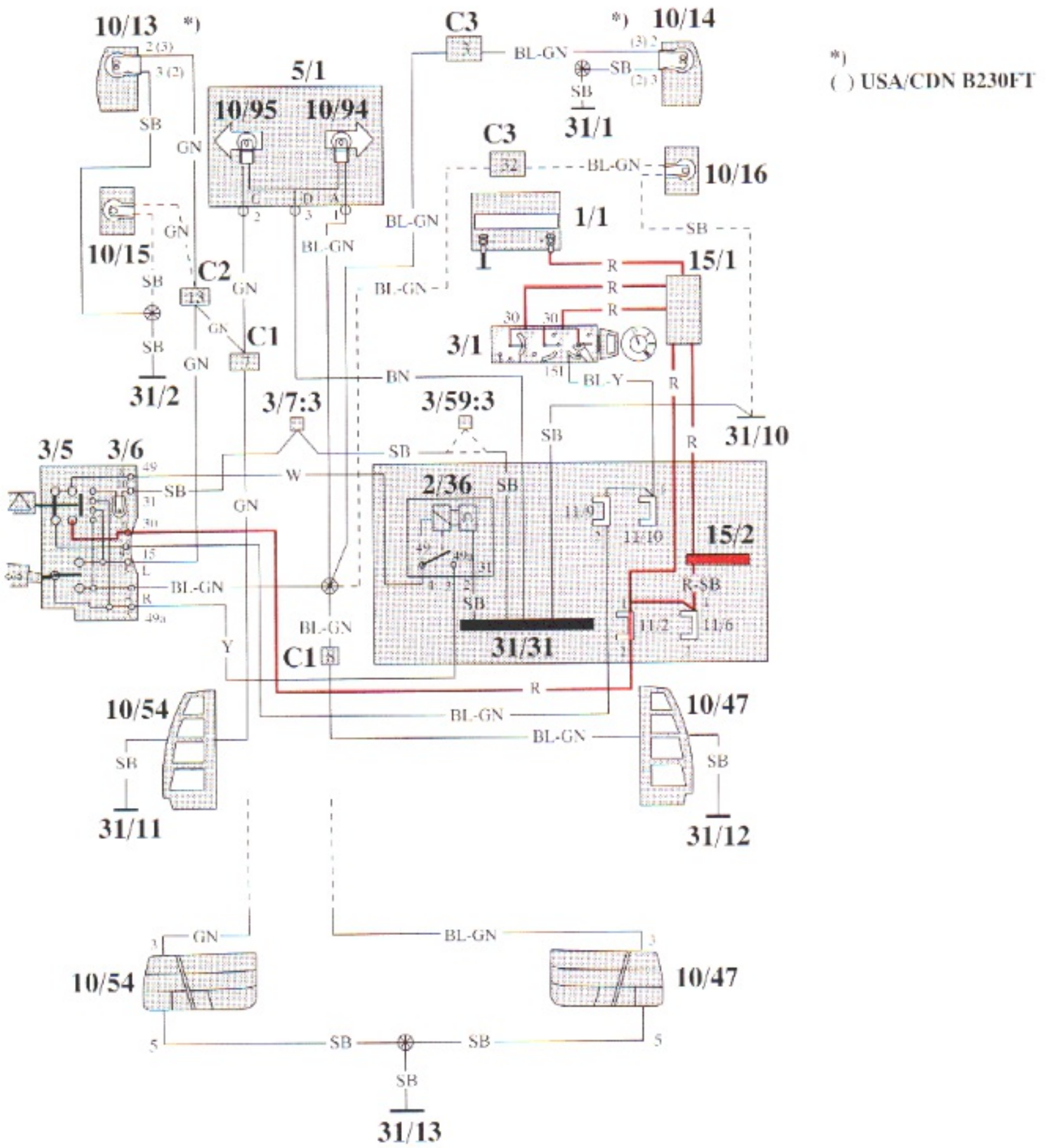

Left turn signal on

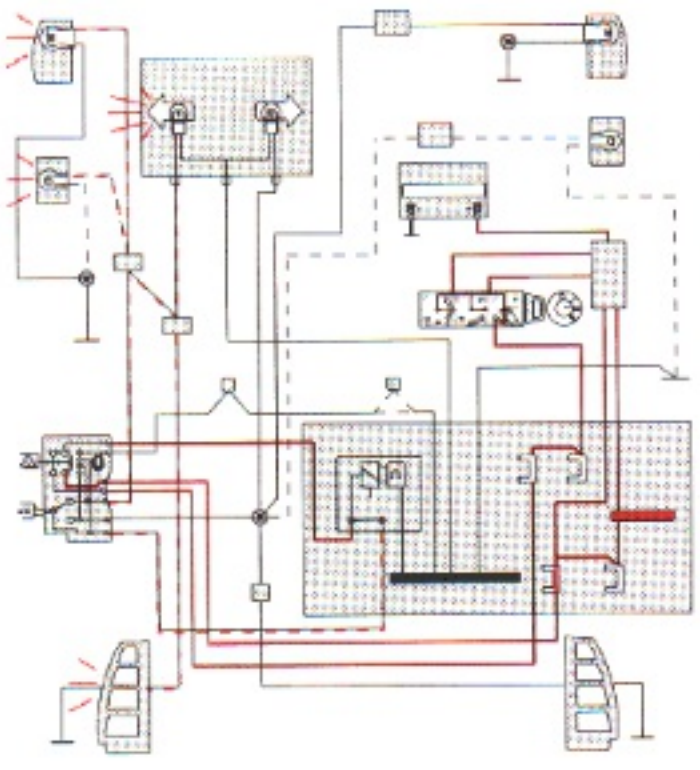

Right turn signal on

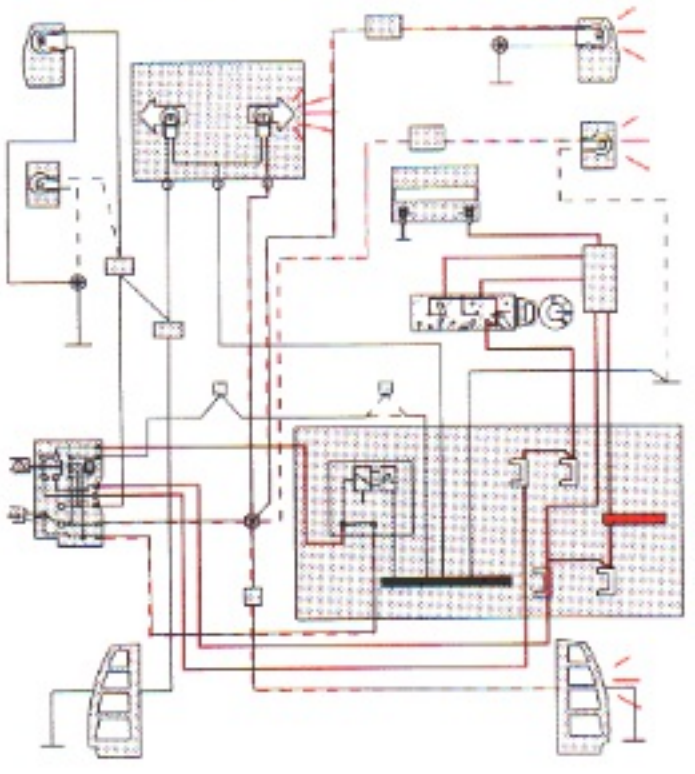

Hazard warning lights on

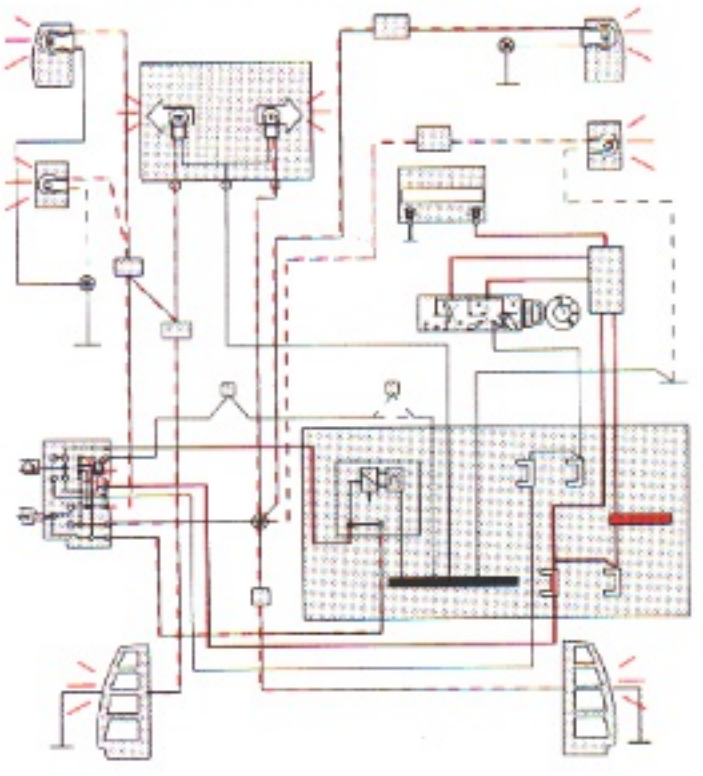

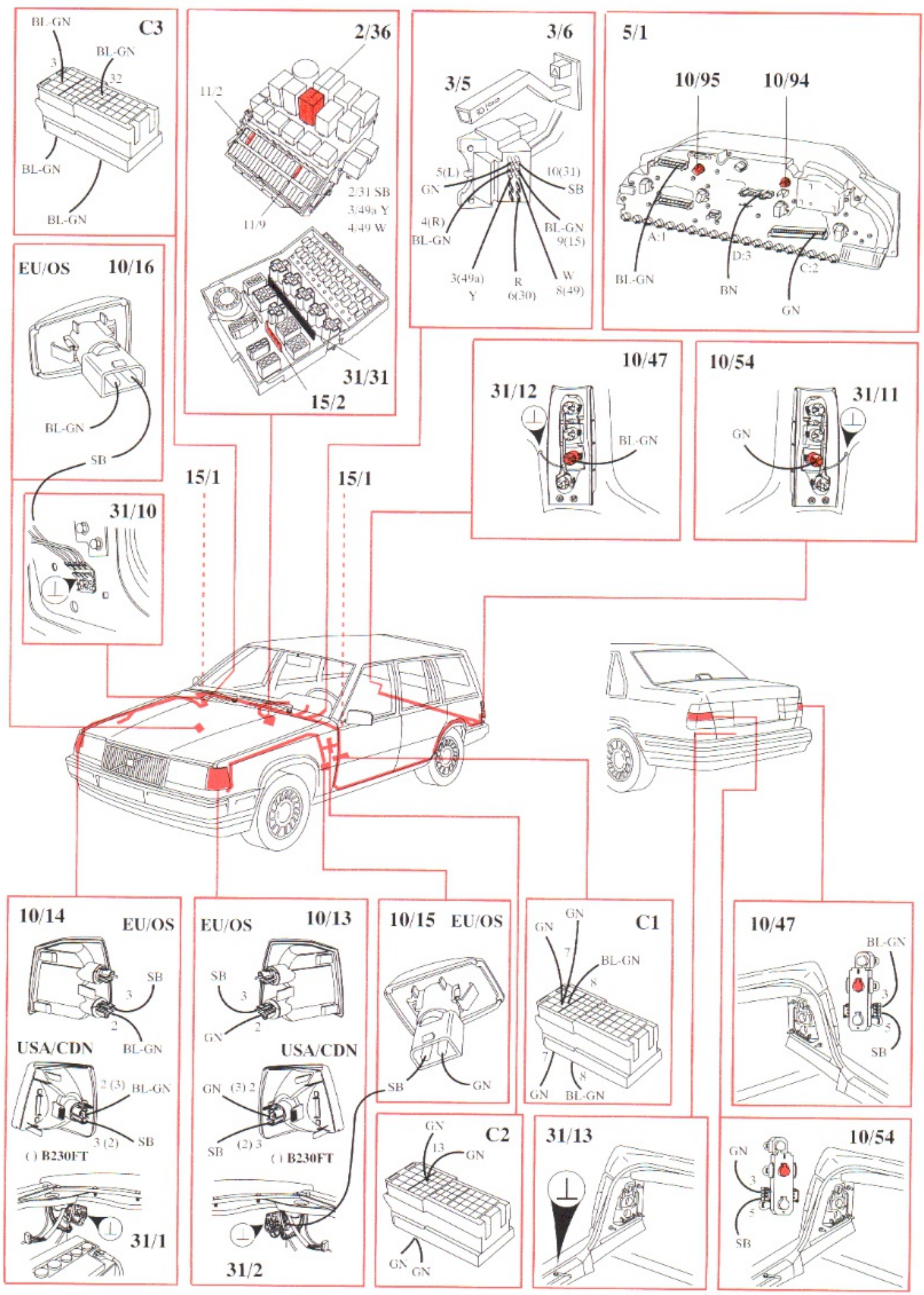
C3
BL-GN
3
BL-GN
32
BL-GN
BL-GN
2/36
11/2
2/31 SB
3/49a Y
4/49 W
11/9
31/31
15/2
3/6
3/5
5(L)
GN
10(31)
SB
4(R)
BL-GN
BL-GN
9(15)
3(49a)
Y
R
6(30)
W
8(49)
5/1
10/95
10/94
A:1
D:3
C:2
BL-GN
BN
GN
EU/OS
10/16
BL-GN
SB
31/10
15/1
15/1
10/47
31/12
BL-GN
10/54
31/11
GN
10/14
EU/OS
SB
3
2
BL-GN
USA/CDN
2 (3)
BL-GN
3 (2)
SB
( ) B230FT
31/1
EU/OS
10/13
SB
3
GN
2
USA/CDN
GN
(3) 2
SB
(2) 3
( ) B230FT
31/2
10/15
EU/OS
SB
GN
C1
GN
7
BL-GN
8
7
8
GN
BL-GN
10/47
BL-GN
3
5
SB
C2
GN
13
GN
GN
GN
31/13
10/54
GN
3
5
SB

Horn

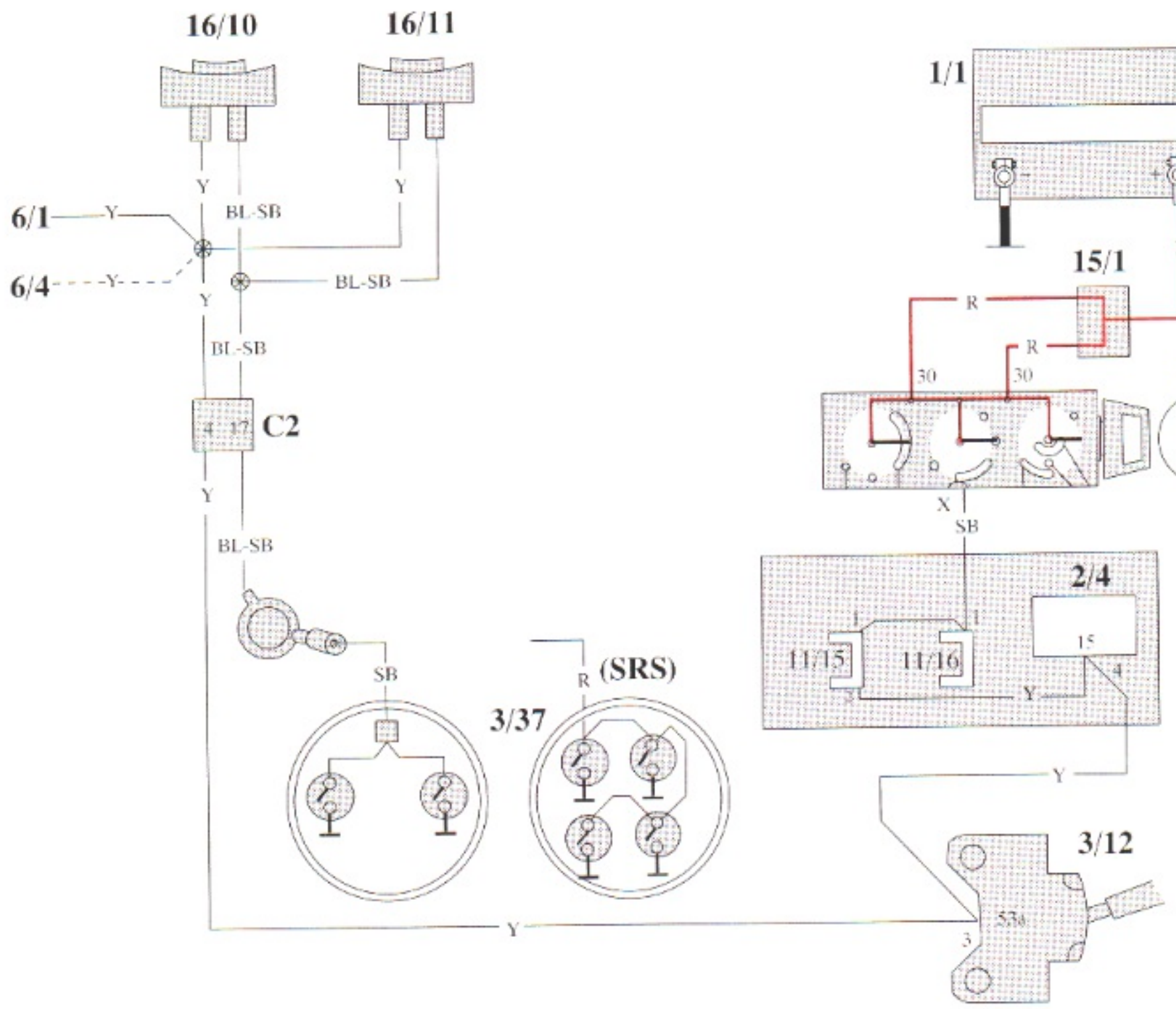

Horn sounding

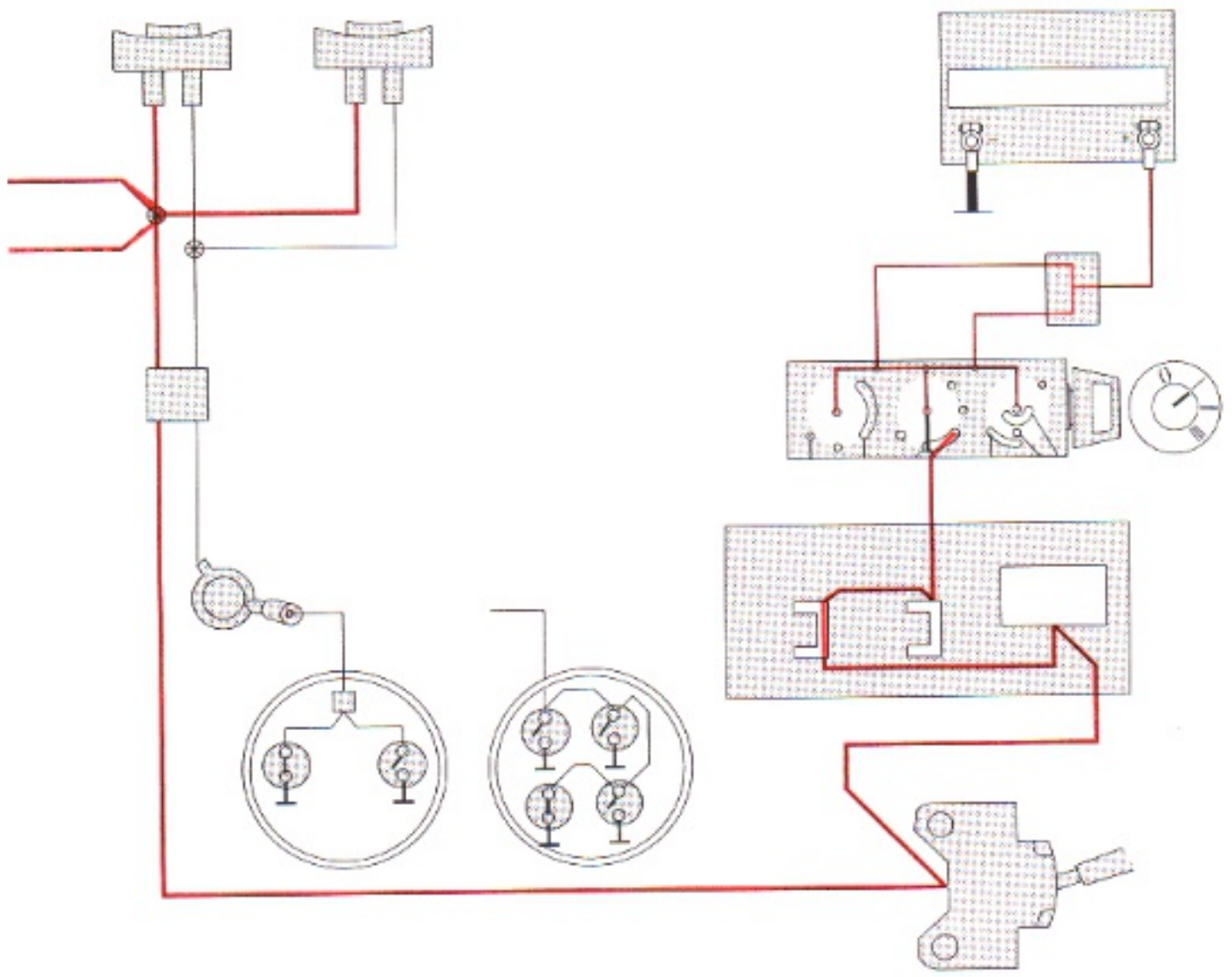

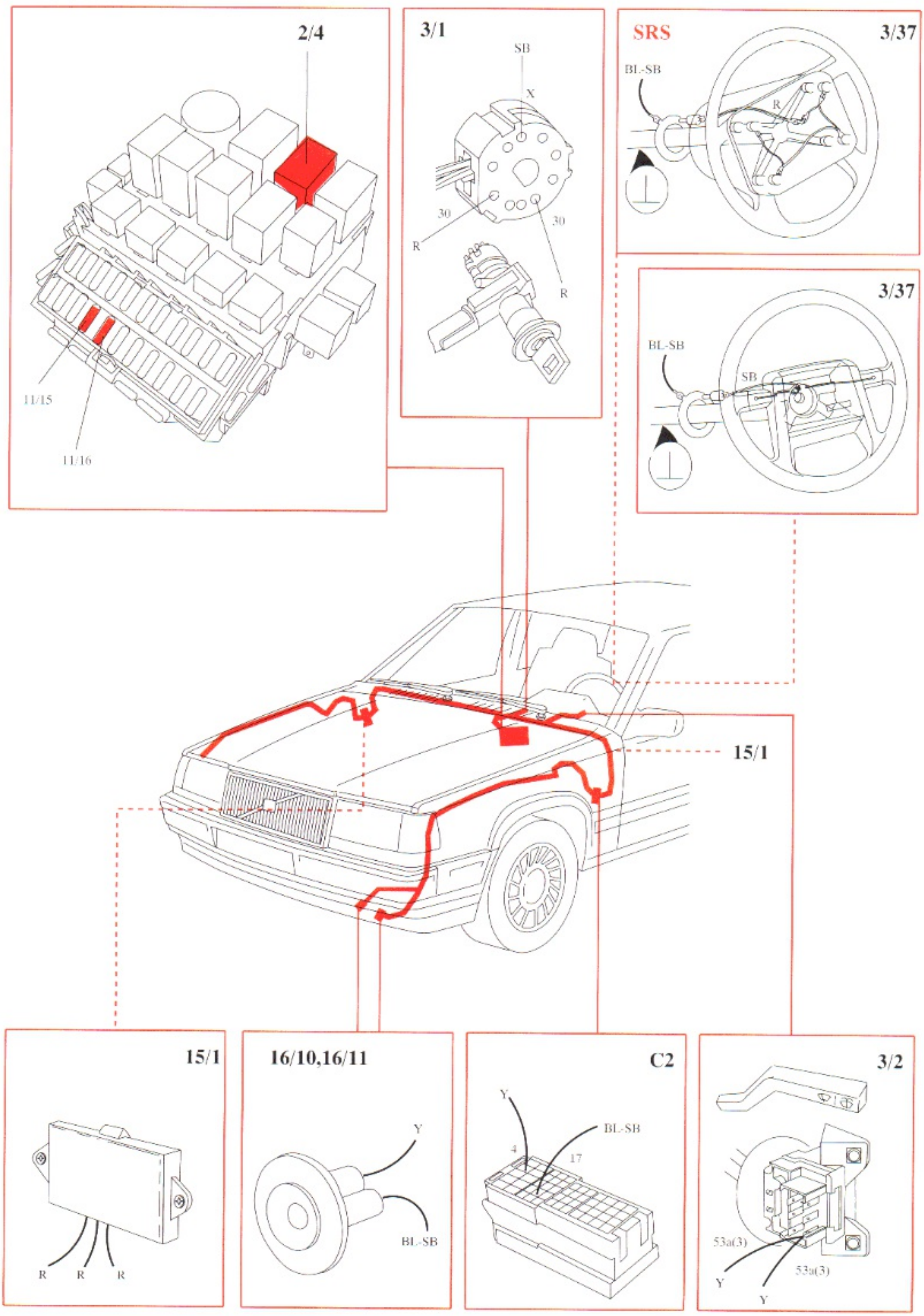
2/4
11/15
11/16
3/1
SB
X
30
30
R
R
SRS
3/37
BL-SB
R
3/37
BL-SB
SB
15/1
15/1
R
R
R
16/10,16/11
Y
BL-SB
C2
Y
4
17
BL-SB
3/2
53a(3)
53a(3)
Y
Y

Headlight wash/wipe

Wiper motors in parking cycle

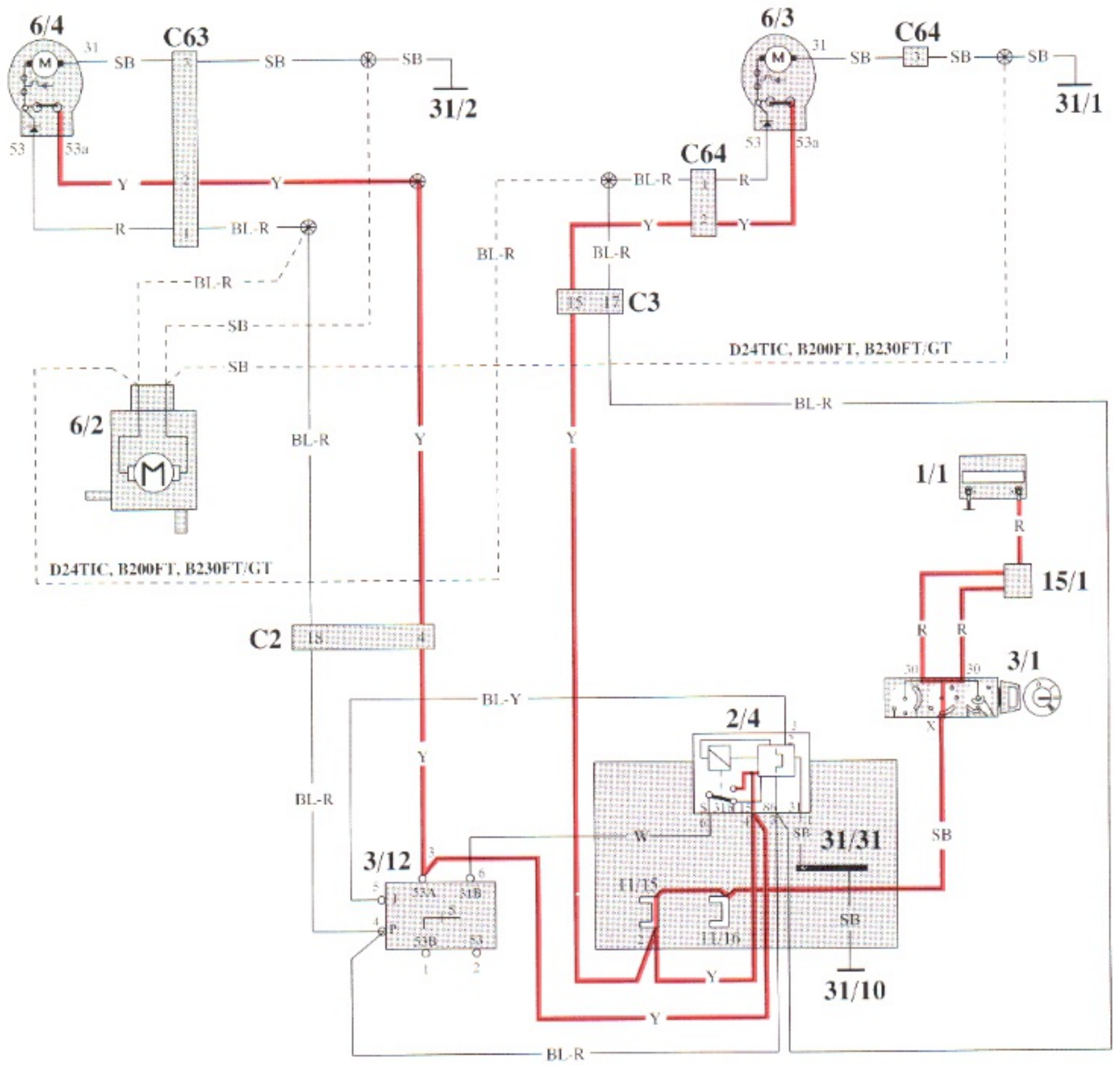

3/12

	0	1	2	3	4
+53a		X	X	X	X
53b			X		
J				X	
P					X
53	X	X		X	X
31b	X			X	X

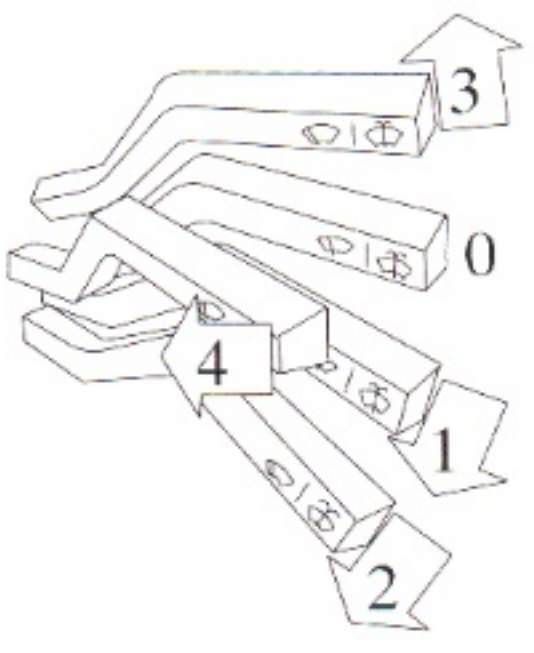

Interconnected junctions at different positions of switch 3/12

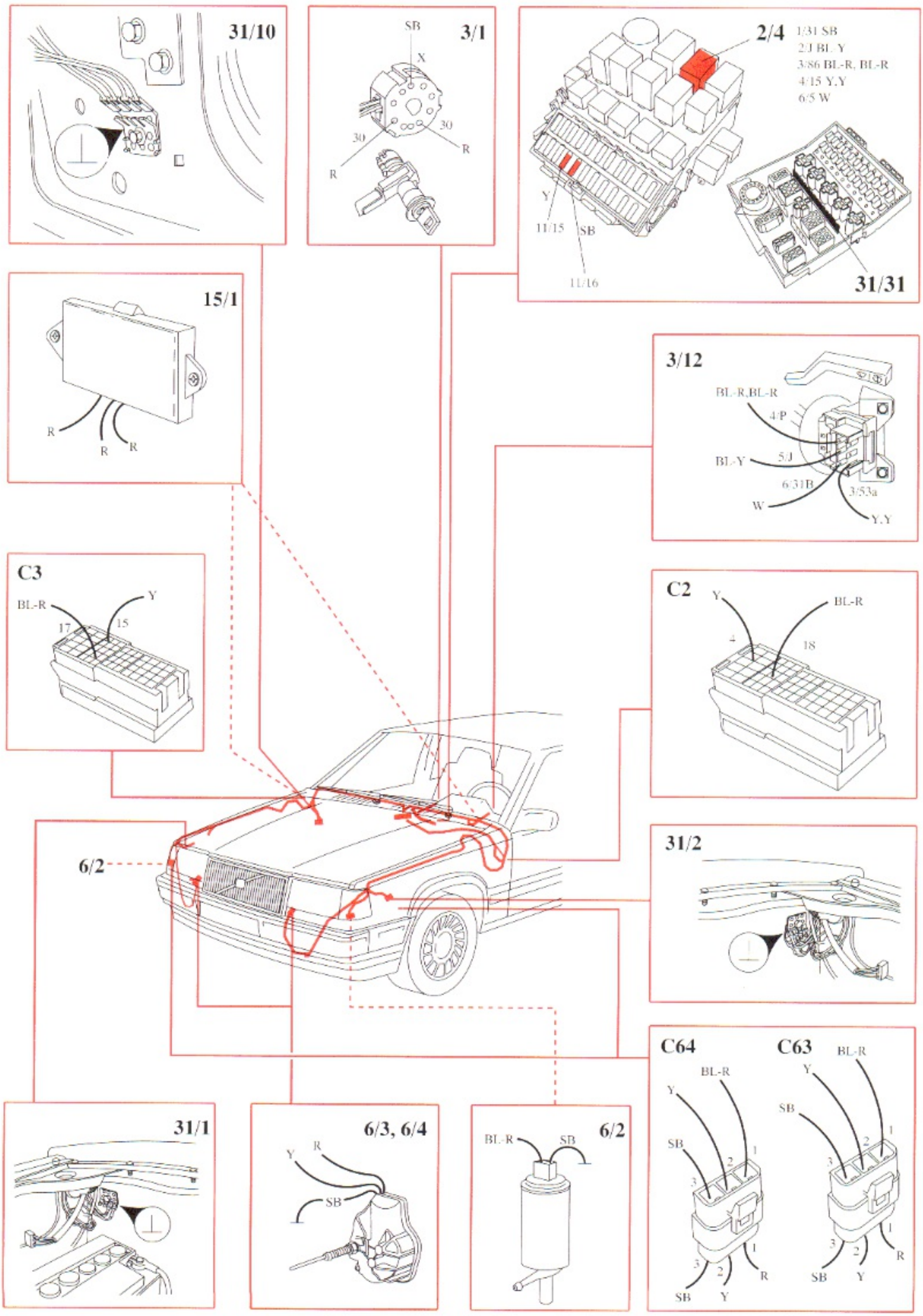
31/10
3/1
SB
X
30
30
R
R
2/4
1/31 SB
2/J BL-Y
3/86 BL-R, BL-R
4/15 Y,Y
6/5 W
Y
11/15
SB
11/16
31/31
15/1
R
R
R
3/12
BL-R,BL-R
4/P
BL-Y
5/J
6/31B
3/53a
W
Y,Y
C3
BL-R
Y
17
15
C2
Y
BL-R
4
18
6/2
31/2
C64
C63
BL-R
Y
SB
3
2
1
SB
Y
R
BL-R
Y
SB
3
2
1
SB
Y
R
31/1
6/3, 6/4
Y
R
SB
6/2
BL-R
SB

Windshield wash/wipe

Wiper motor in parking cycle

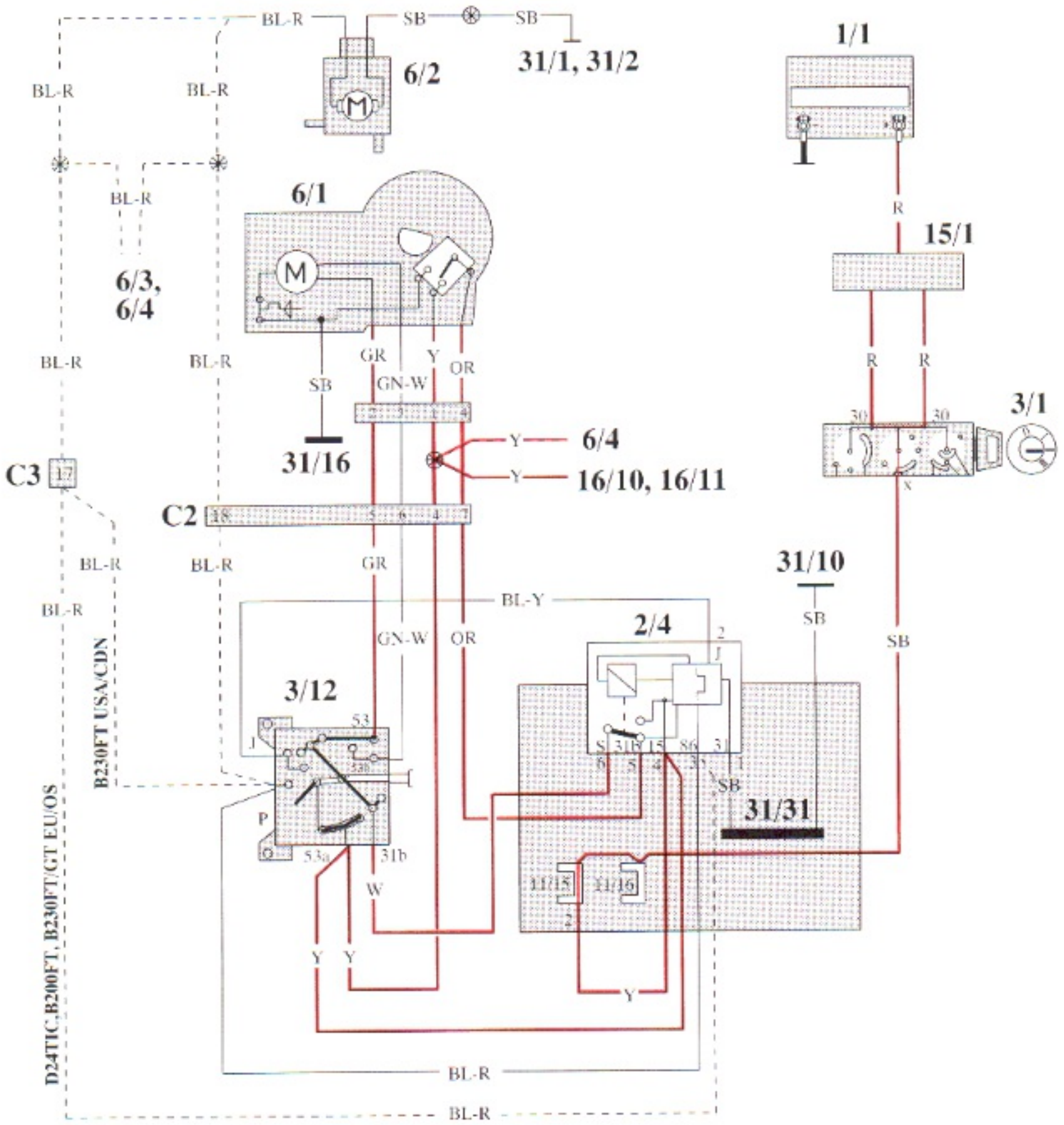

3/12

	0	1	2	3	4
+53a		X	X	X	X
53b			X		
J				X	
P					X
53	X	X		X	X
31b	X			X	X

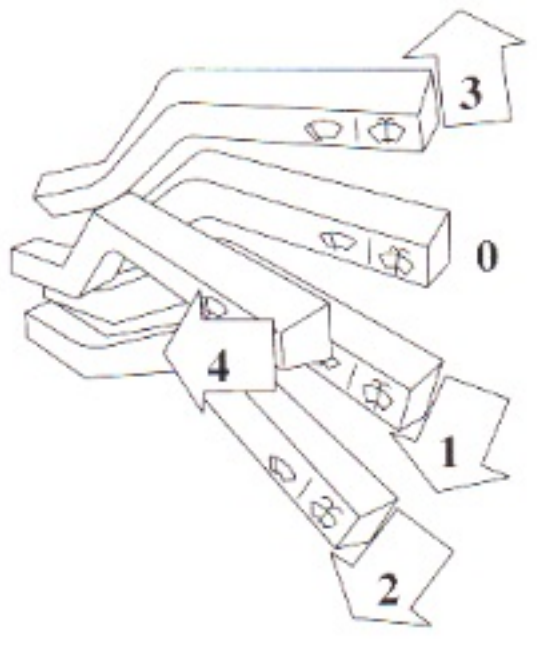

Interconnected junctions at different positions of switch 3/12

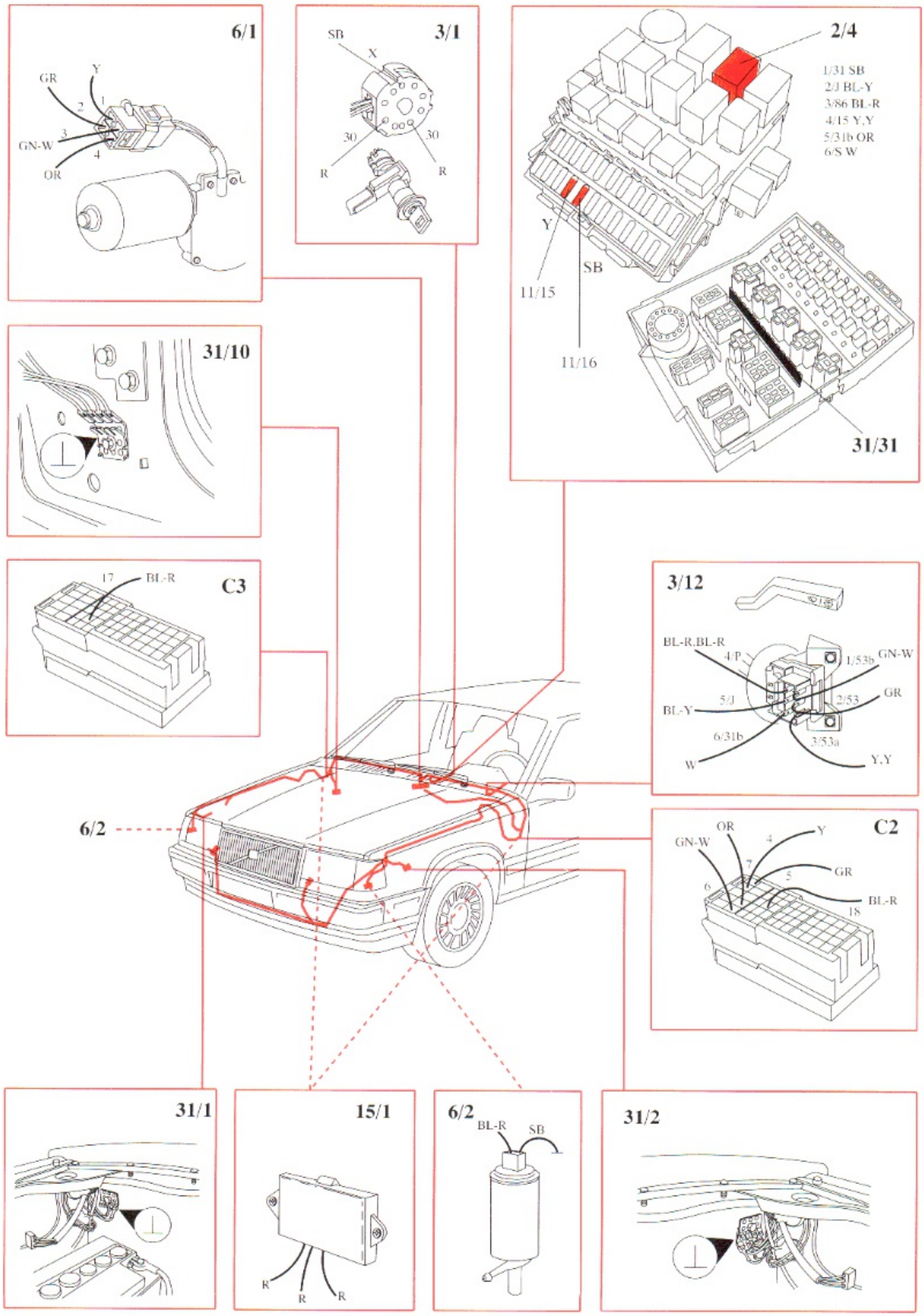
6/1
GR
Y
2
1
3
GN-W
4
OR
3/1
SB
X
30
30
R
R
2/4
1/31 SB
2/J BL-Y
3/86 BL-R
4/15 Y,Y
5/31b OR
6/S W
Y
SB
11/15
11/16
31/31
31/10
C3
17
BL-R
3/12
BL-R,BL-R
4/P
1/53b
GN-W
5/J
2/53
GR
BL-Y
6/31b
3/53a
W
Y,Y
6/2
C2
OR
GN-W
4
Y
7
5
GR
6
BL-R
18
31/1
15/1
R
R
R
6/2
BL-R
SB
31/2

Tailgate wash/wipe

Wiper motor on

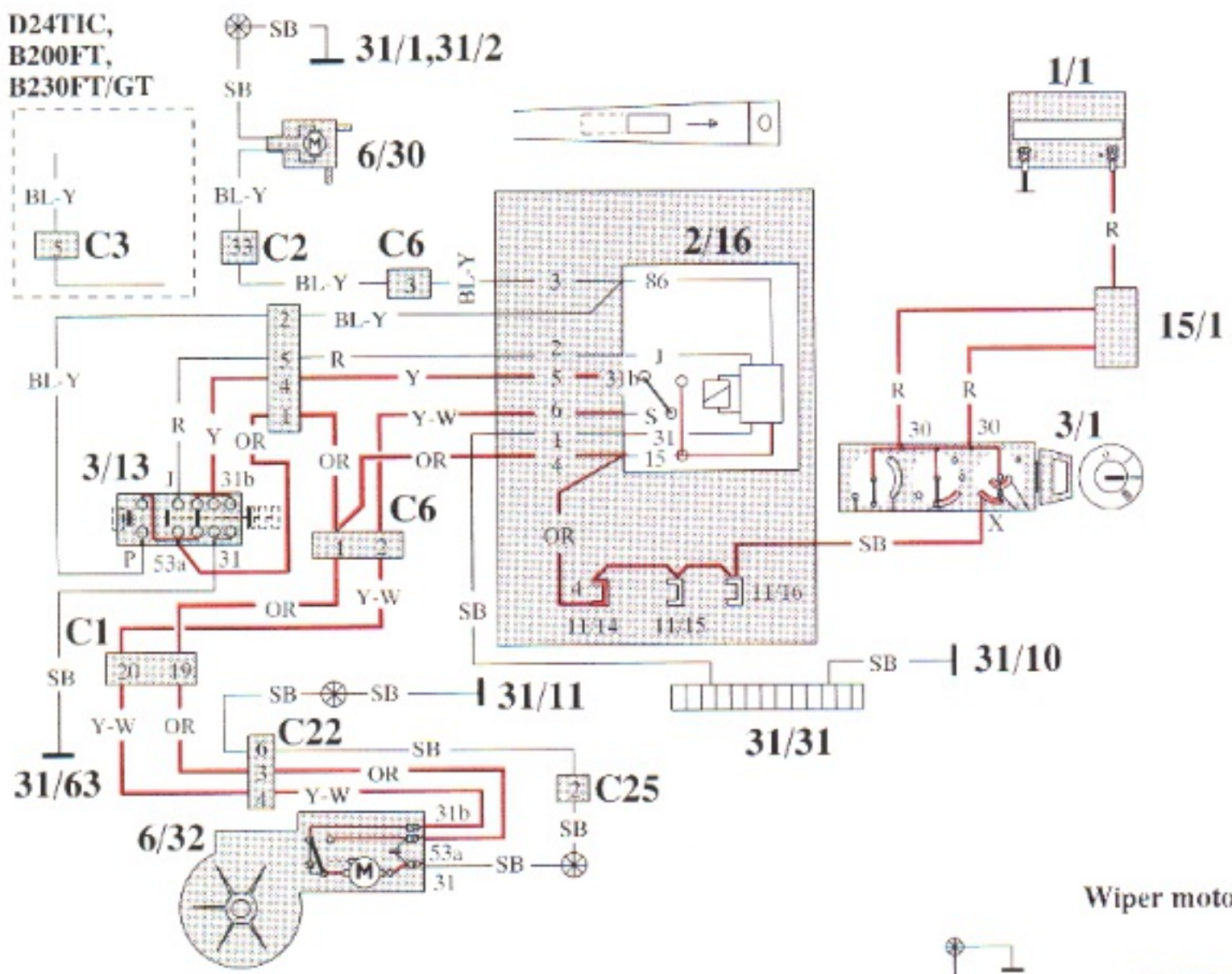

Wiper motor in parking cycle

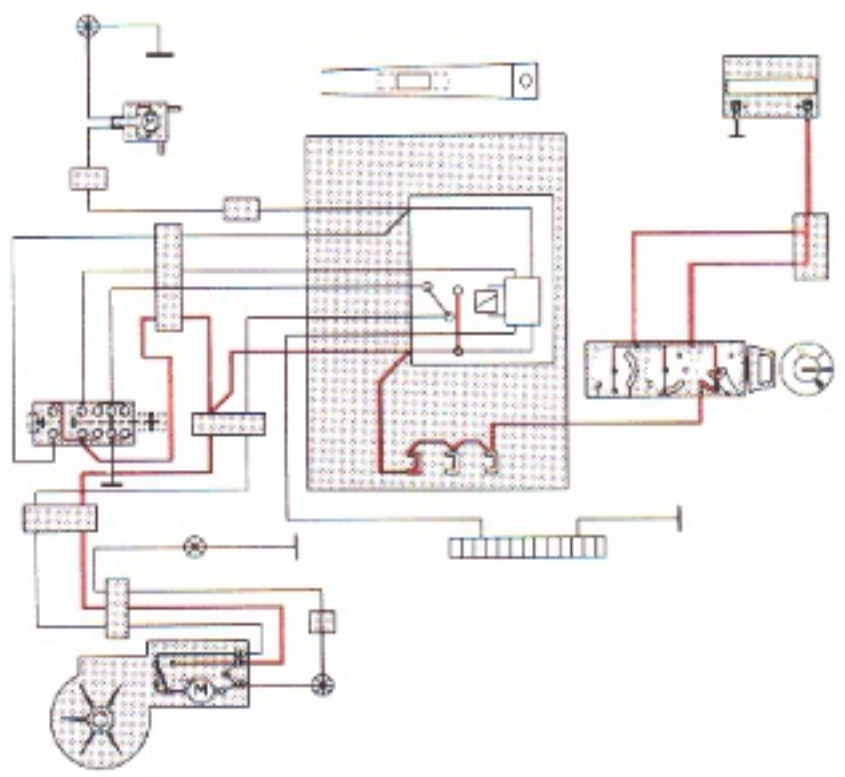

Washer motor on with a few wiper strokes

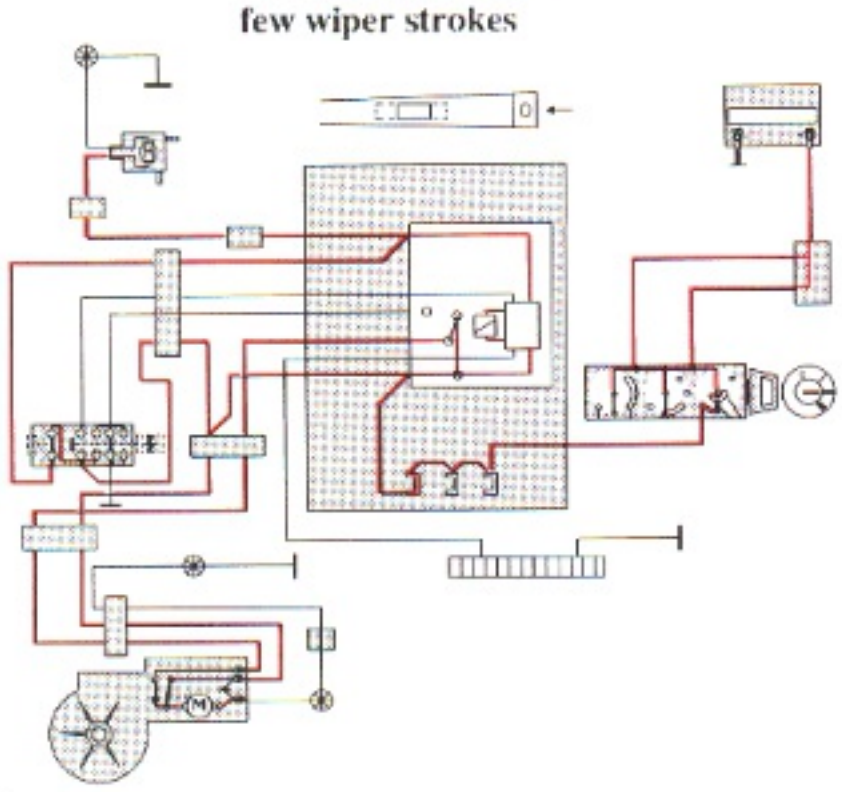

Intermittent wiping

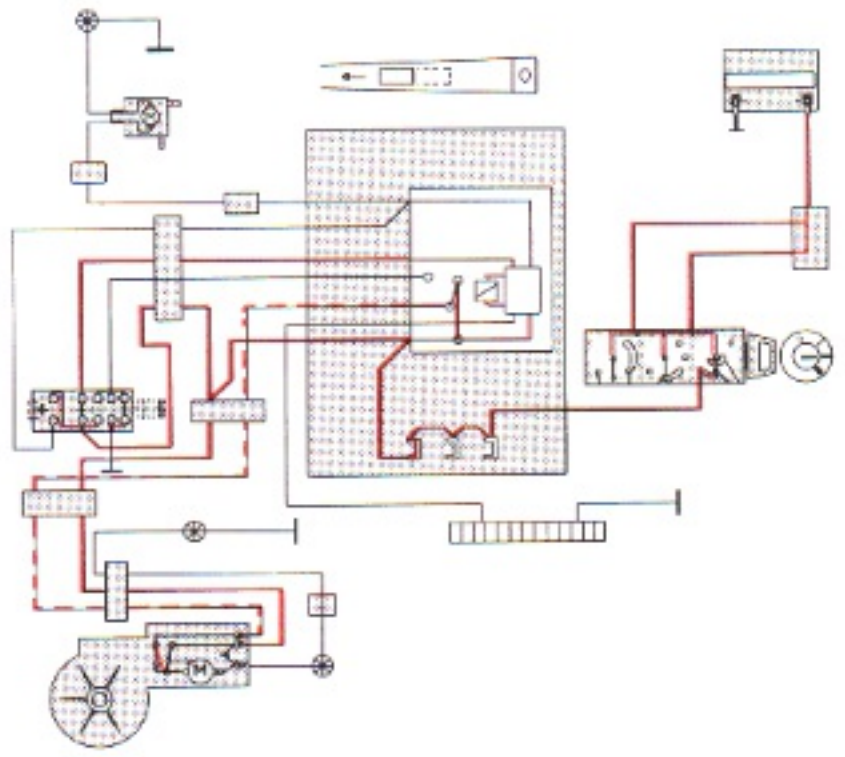

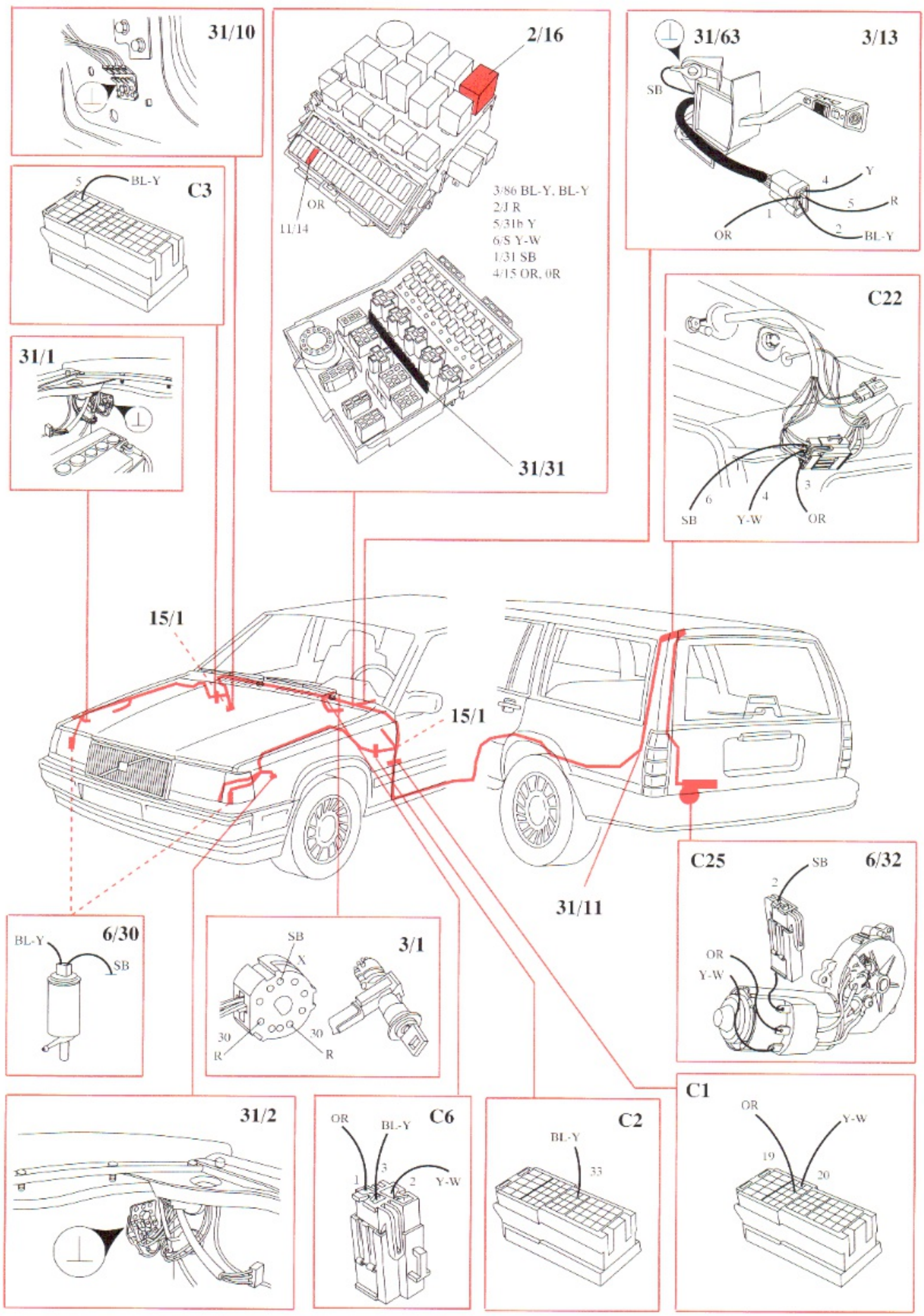
31/10
2/16
3/86 BL-Y, BL-Y
2/J R
5/31b Y
6/S Y-W
1/31 SB
4/15 OR, 0R
OR
11/14
31/31
31/63
3/13
SB
Y
R
BL-Y
OR
C3
5
BL-Y
31/1
C22
SB
Y-W
OR
15/1
15/1
31/11
C25
6/32
SB
OR
Y-W
6/30
BL-Y
SB
3/1
SB
X
30
R
30
R
31/2
C6
OR
BL-Y
Y-W
C2
BL-Y
33
C1
OR
Y-W
19
20

Cigar lighter

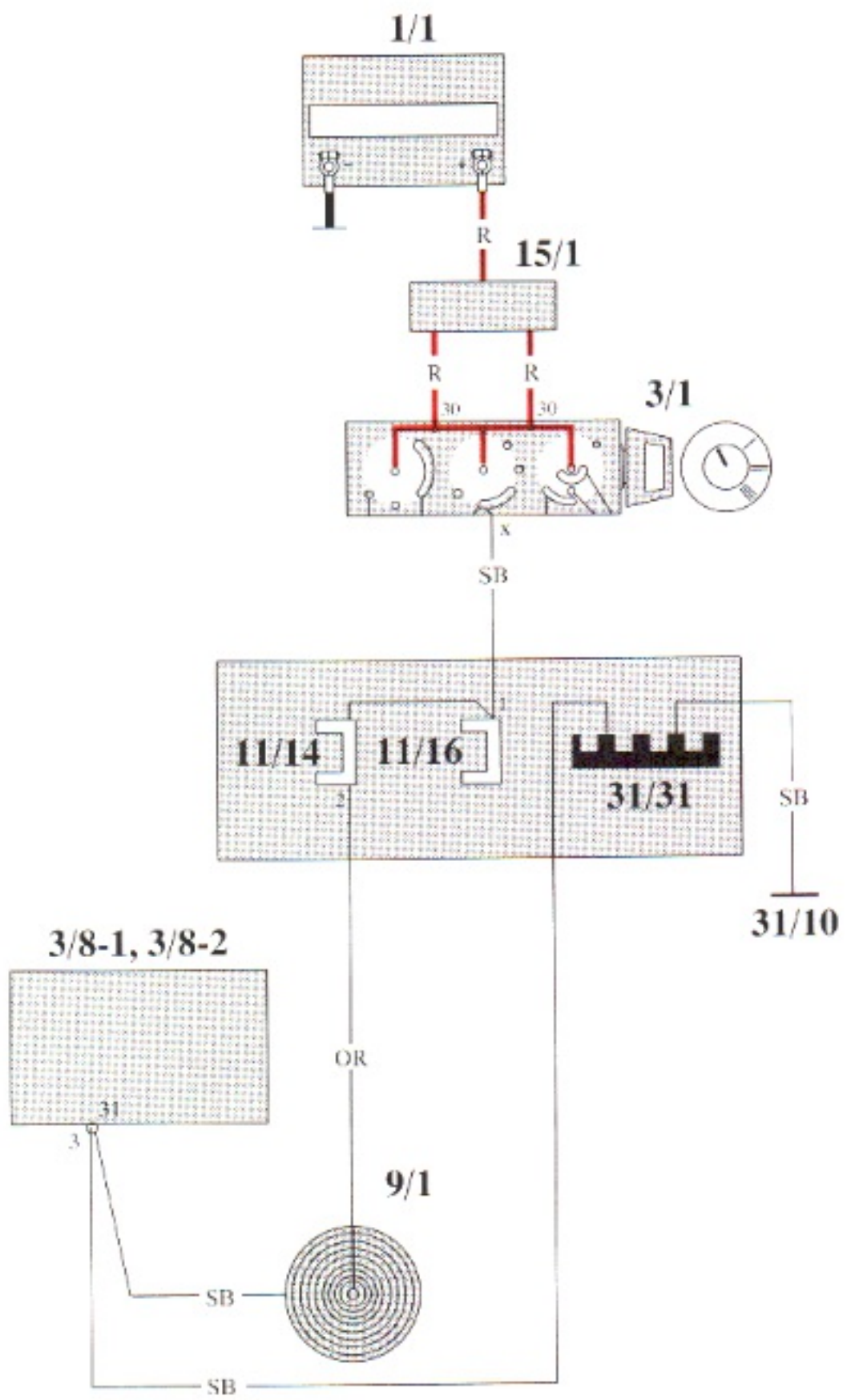

Cigar lighter pushed IN

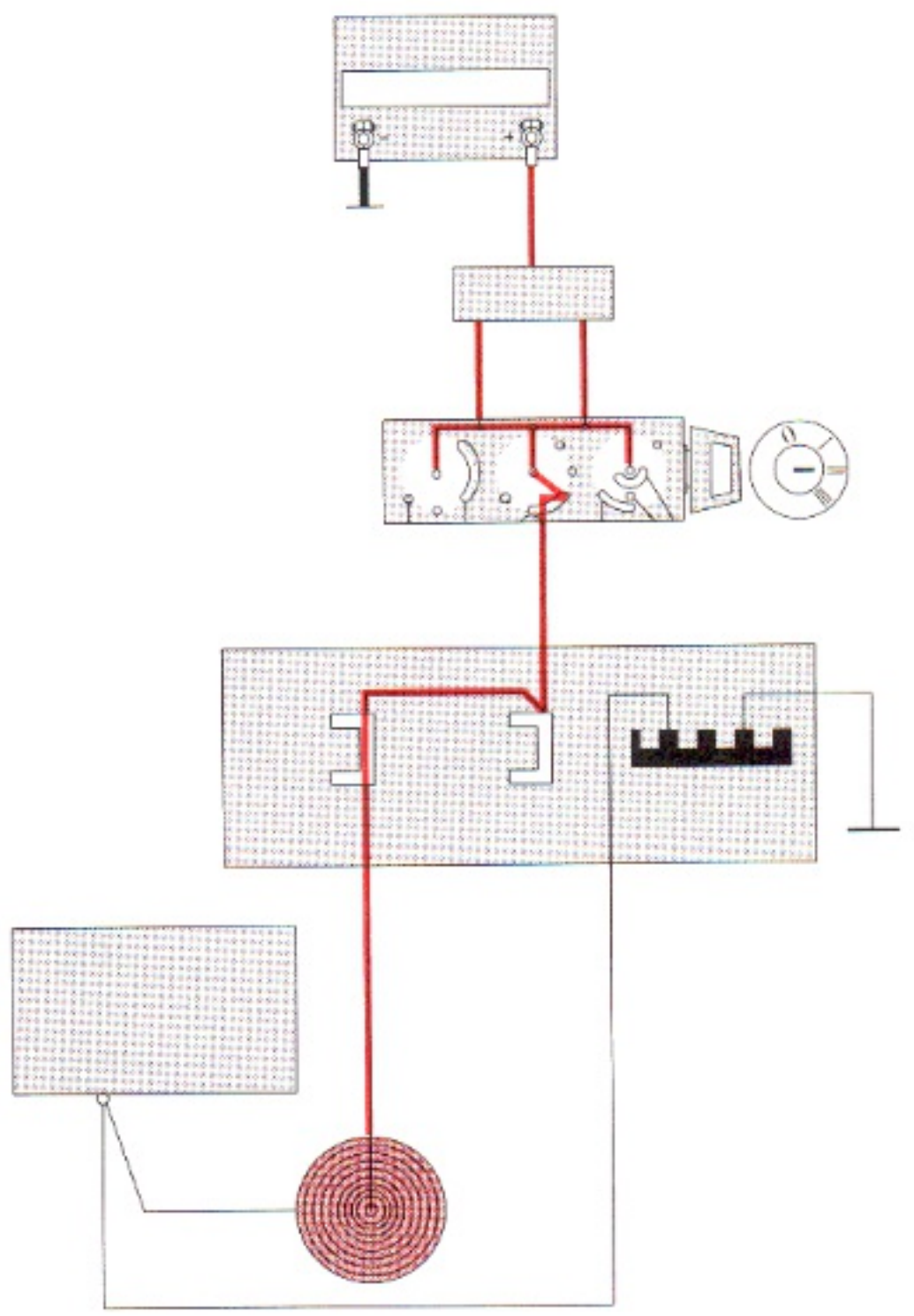

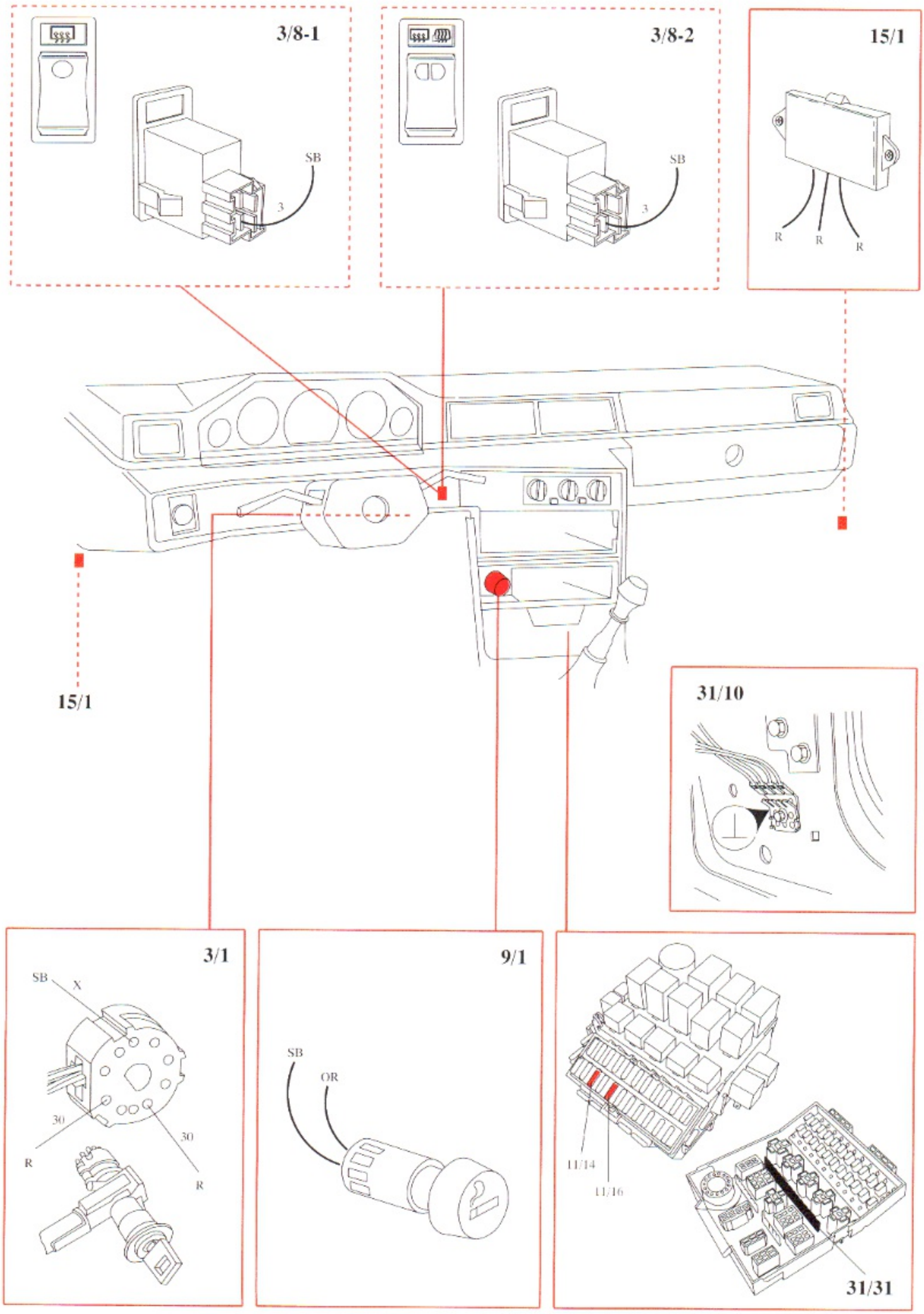
3/8-1
SB
3
3/8-2
SB
3
15/1
R
R
R
15/1
31/10
3/1
SB
X
30
30
R
R
9/1
SB
OR
11/14
11/16
31/31

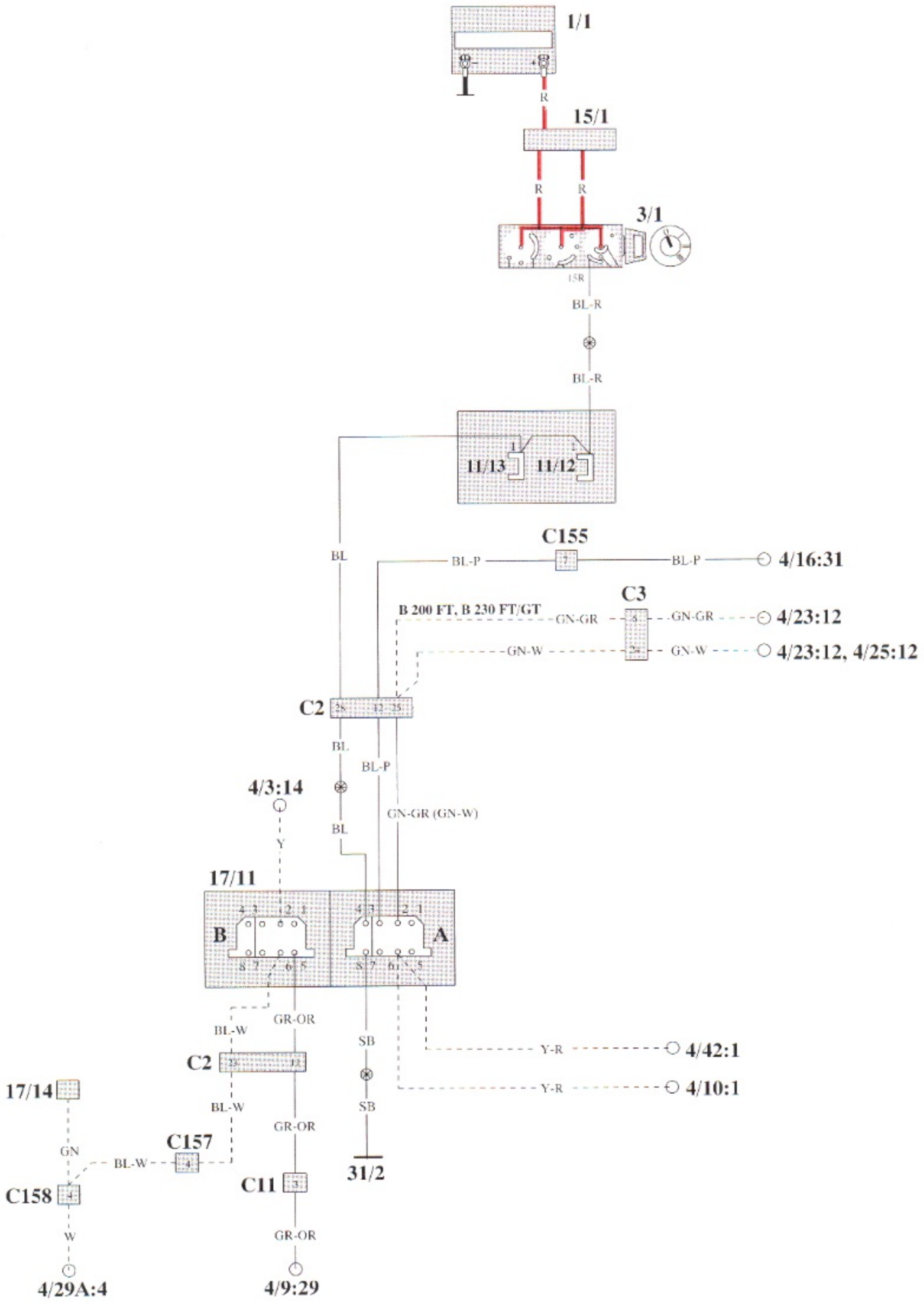
1/1
R
15/1
R
R
3/1
15R
BL-R
BL-R
11/13
11/12
C155
BL
BL-P
BL-P
4/16:31
C3
B 200 FT, B 230 FT/GT
GN-GR
GN-GR
4/23:12
GN-W
GN-W
4/23:12, 4/25:12
C2
BL
BL-P
4/3:14
GN-GR (GN-W)
BL
Y
17/11
B
A
BL-W
GR-OR
SB
Y-R
4/42:1
C2
Y-R
4/10:1
17/14
BL-W
SB
GR-OR
GN
C157
BL-W
31/2
C11
C158
W
GR-OR
4/29A:4
4/9:29

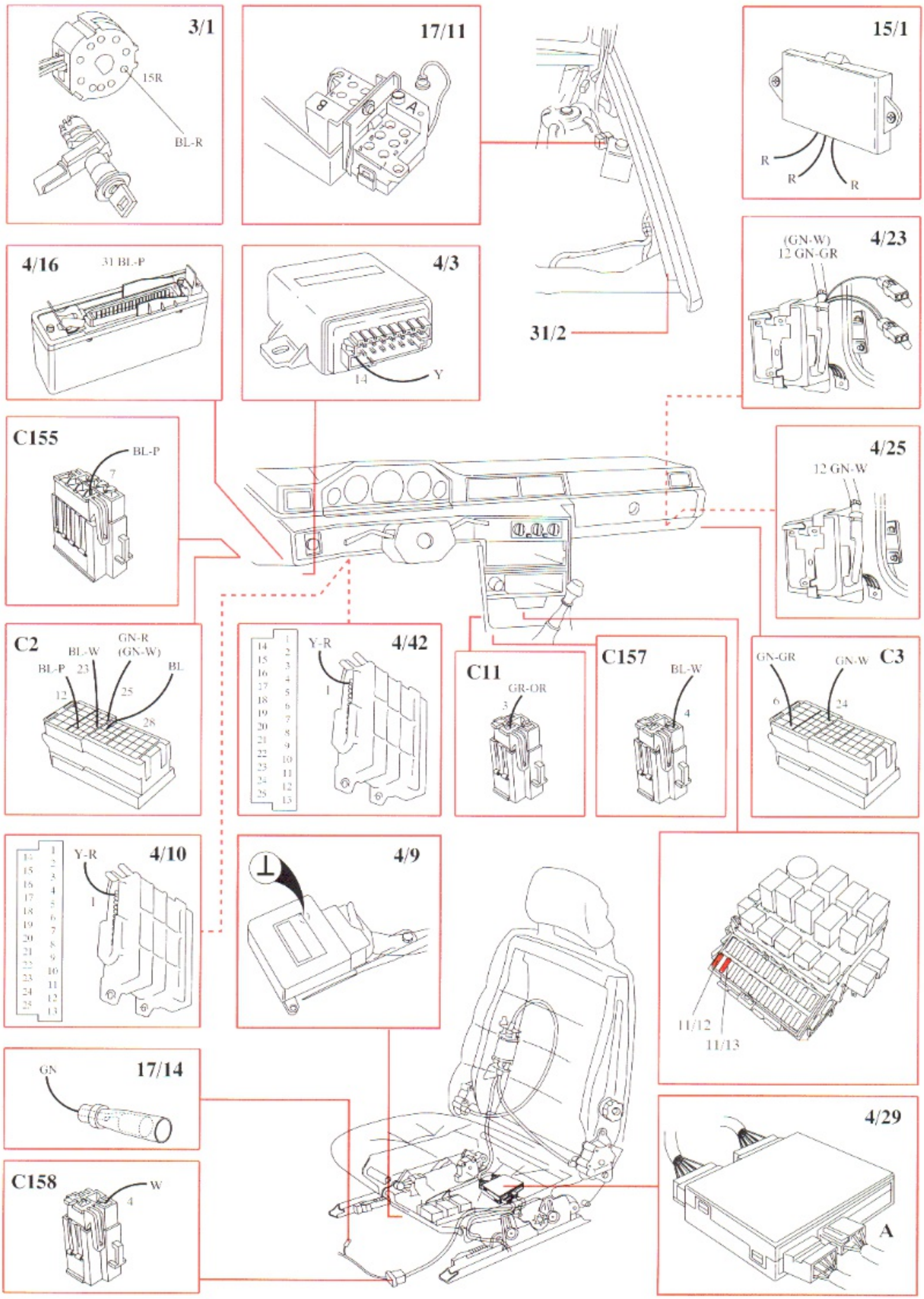
3/1
15R
BL-R
17/11
B
A
15/1
R
R
R
4/16
31 BL-P
4/3
14
Y
31/2
(GN-W)
12 GN-GR
4/23
C155
BL-P
7
4/25
12 GN-W
C2
BL-P
BL-W
23
GN-R
(GN-W)
BL
12
25
28
4/42
Y-R
1
C11
GR-OR
3
C157
BL-W
4
GN-GR
GN-W
C3
6
24
4/10
Y-R
1
4/9
11/12
11/13
GN
17/14
C158
W
4
4/29
A

Pre-routed wiring for anti-theft alarm

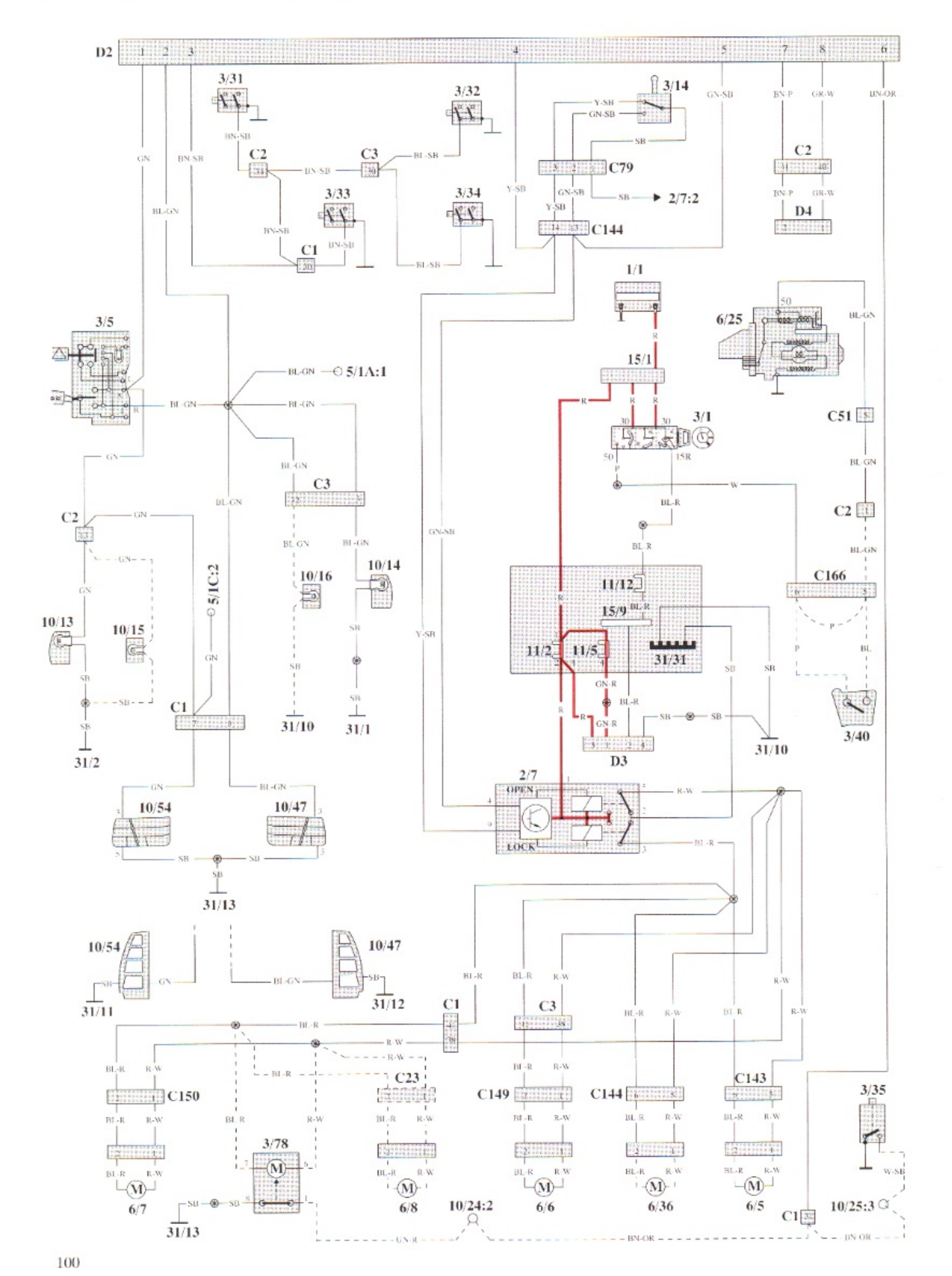

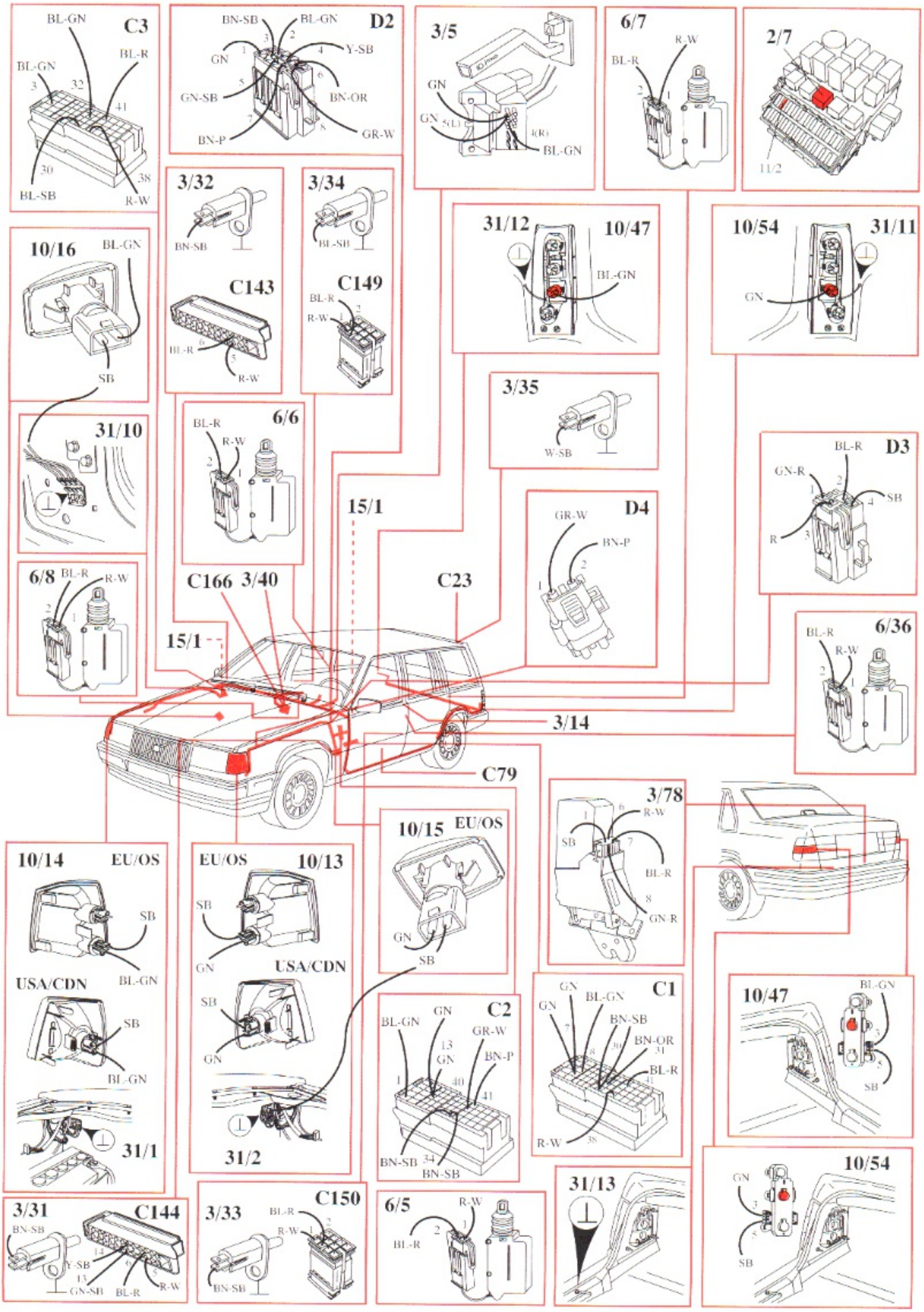
C3
BL-GN
BL-R
BL-GN
3
32
41
30
38
BL-SB
R-W
D2
BN-SB
BL-GN
GN
Y-SB
GN-SB
BN-OR
BN-P
GR-W
3/5
GN
GN
BL-GN
6/7
R-W
BL-R
2/7
11/2
3/32
BN-SB
3/34
BL-SB
C143
BL-R
R-W
C149
BL-R
R-W
31/12
10/47
BL-GN
10/54
31/11
GN
10/16
BL-GN
SB
3/35
W-SB
31/10
6/6
BL-R
R-W
15/1
D3
BL-R
GN-R
SB
R
D4
GR-W
BN-P
6/8
BL-R
R-W
C166
3/40
C23
15/1
6/36
BL-R
R-W
3/14
C79
3/78
R-W
SB
BL-R
GN-R
10/15
EU/OS
GN
SB
10/14
EU/OS
SB
USA/CDN
BL-GN
SB
BL-GN
31/1
EU/OS
10/13
SB
GN
USA/CDN
SB
GN
31/2
C2
BL-GN
GN
GR-W
13
GN
BN-P
1
40
41
BN-SB
34
BN-SB
C1
GN
GN
BL-GN
BN-SB
BN-OR
31
BL-R
41
R-W
38
10/47
BL-GN
SB
3/31
C144
BN-SB
Y-SB
13
GN-SB
BL-R
R-W
3/33
C150
BL-R
R-W
BN-SB
6/5
R-W
BL-R
31/13
10/54
GN
SB

Pre-routed wiring for towing hook

D5

1. Left turn signal
2. Rear foglights
3. Ground connector
4. Right turn signal
5. Right parking light
6. Brake light
7. Left parking light
8. Backup (reversing) lights
9. Supply 30+
10. Supply 15I+

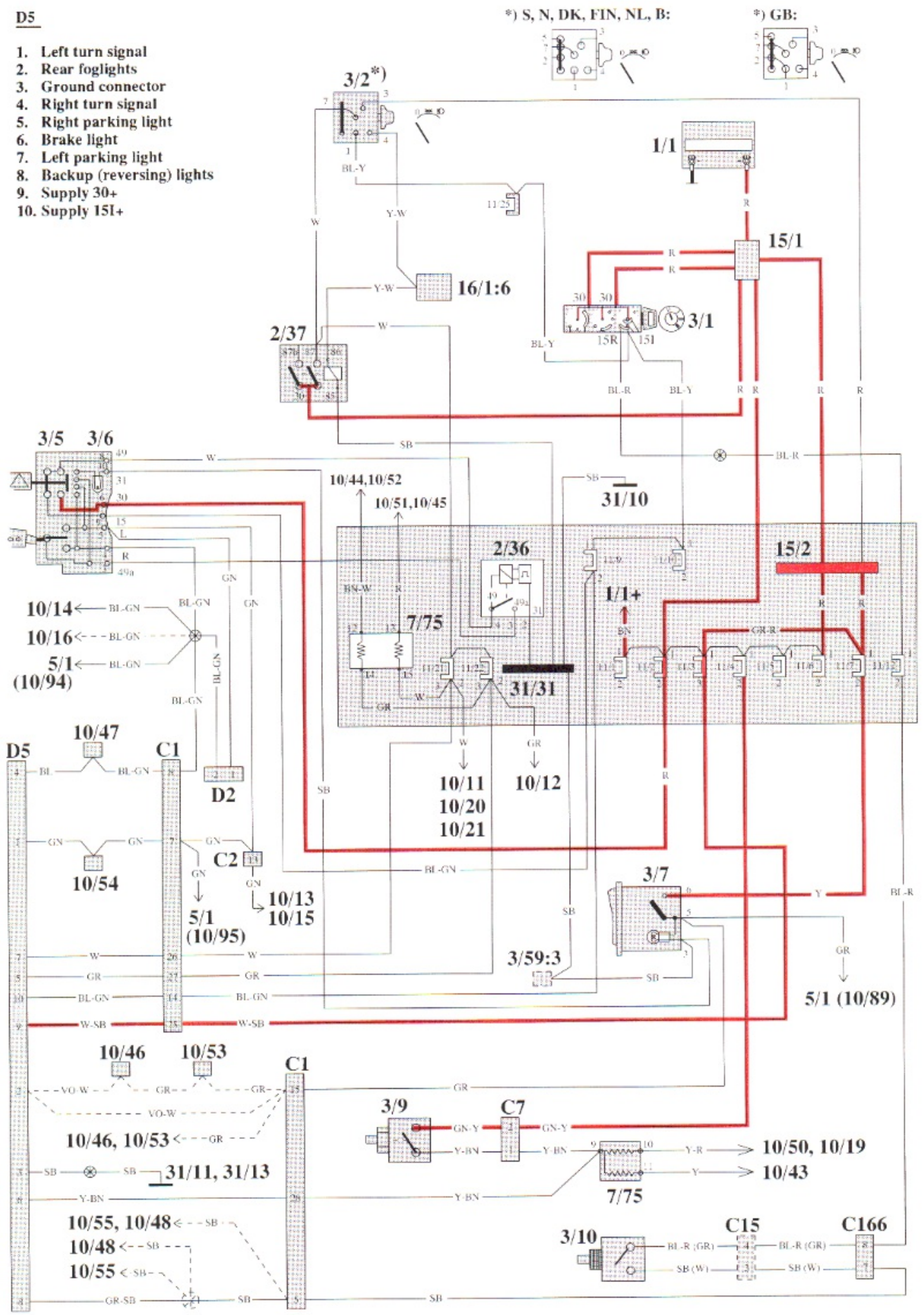

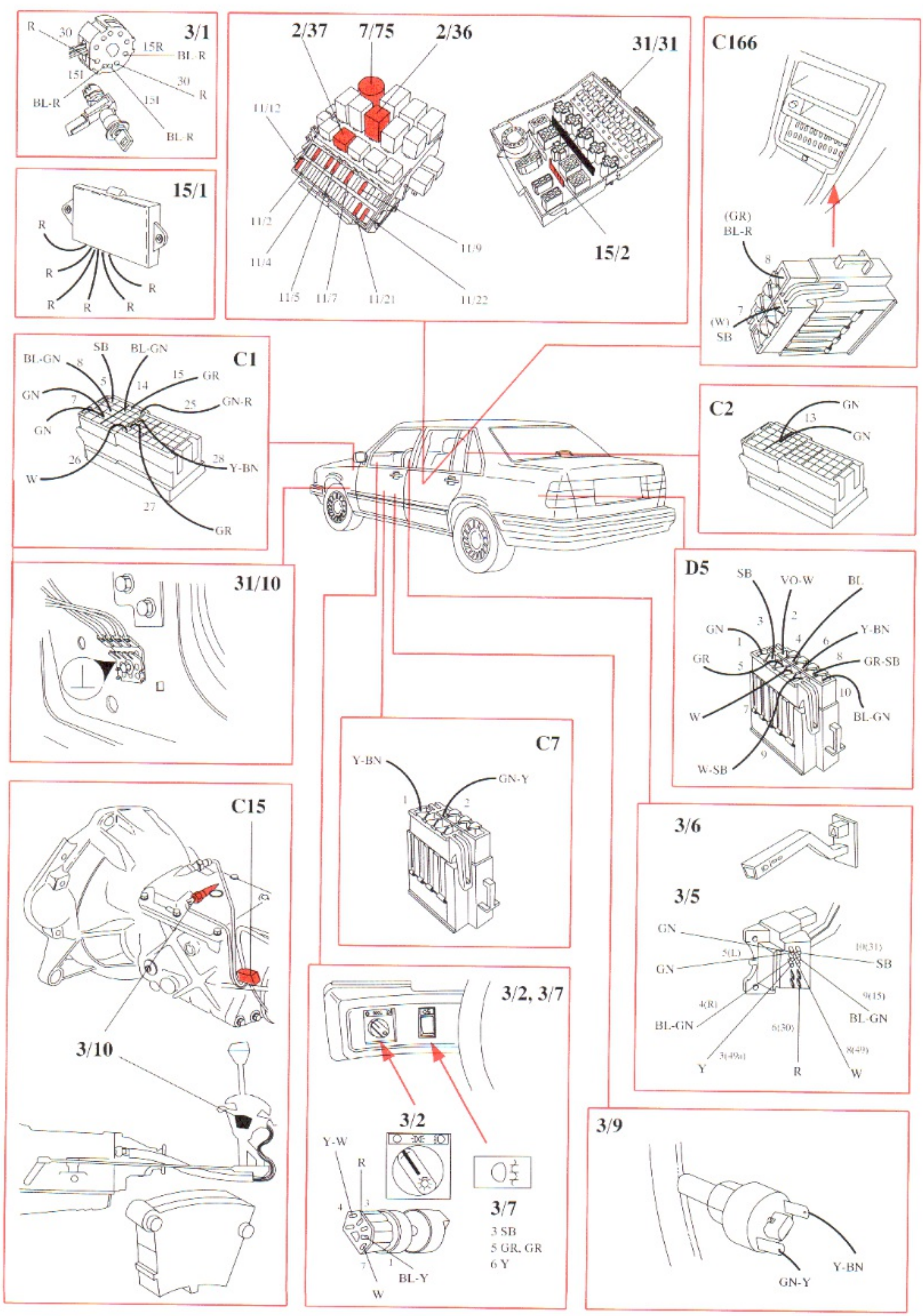
3/1
R
30
15R
BL-R
15I
30
R
BL-R
15I
BL-R
15/1
R
R
R
R
R
R
2/37
7/75
2/36
31/31
11/12
11/2
11/4
11/5
11/7
11/21
11/9
11/22
15/2
C166
(GR)
BL-R
8
7
(W)
SB
C1
BL-GN
SB
BL-GN
8
5
14
15
GR
GN
7
25
GN-R
GN
26
28
Y-BN
W
27
GR
C2
GN
13
GN
31/10
C7
Y-BN
GN-Y
1
2
D5
SB
VO-W
BL
3
2
GN
1
4
6
Y-BN
GR
5
8
GR-SB
10
W
7
BL-GN
9
W-SB
3/6
3/5
GN
5(L)
10(31)
GN
SB
4(R)
9(15)
BL-GN
6(30)
BL-GN
3(49a)
8(49)
Y
R
W
C15
3/10
3/2, 3/7
3/2
Y-W
R
4
3
7
1
BL-Y
W
3/7
3 SB
5 GR, GR
6 Y
3/9
Y-BN
GN-Y

Bulb malfunction indicator

Indicator lamp, 10/88, lights up when a bulb fails in any of the following circuits:
- Brake light
- Low beam
- Tail light

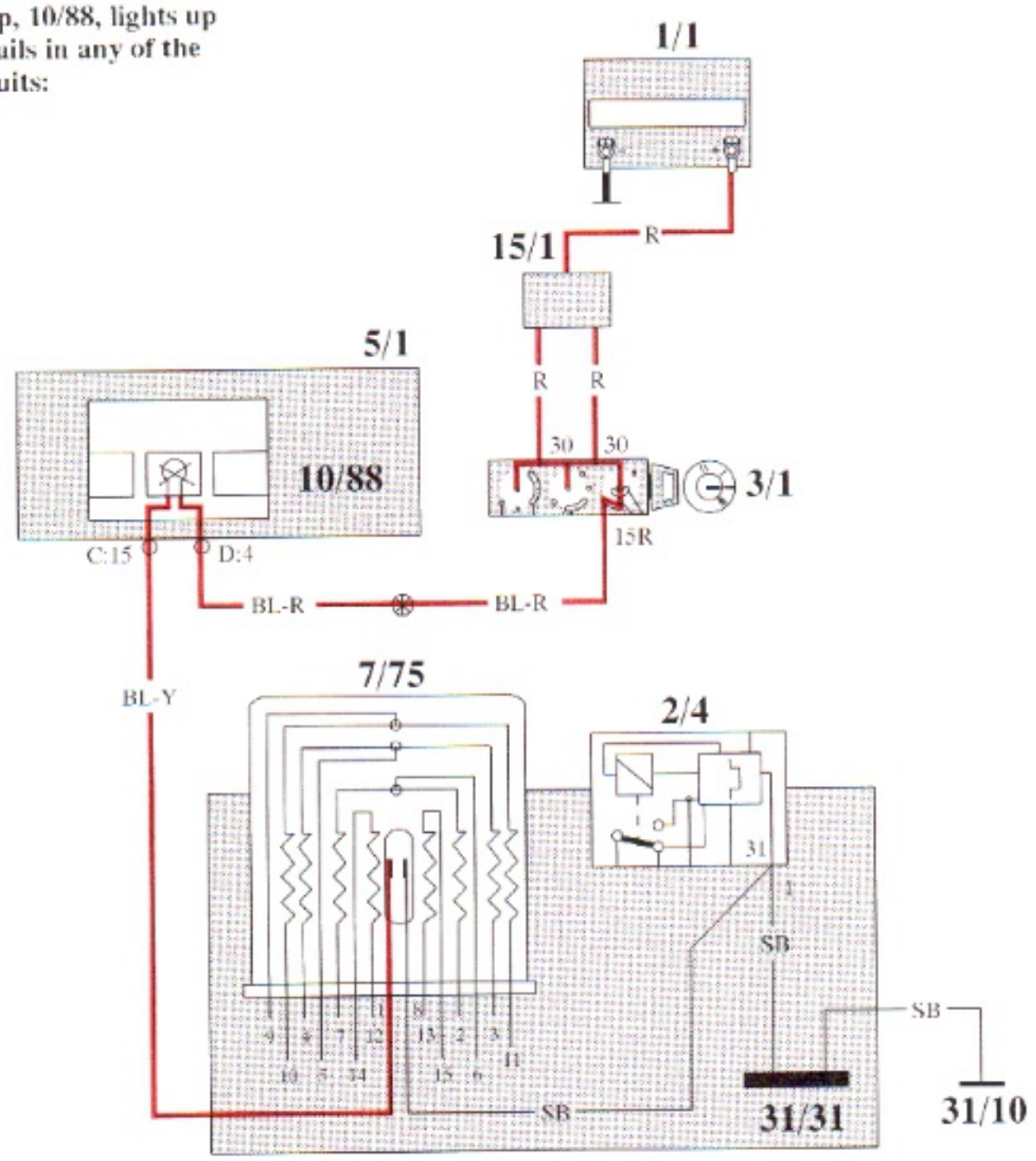

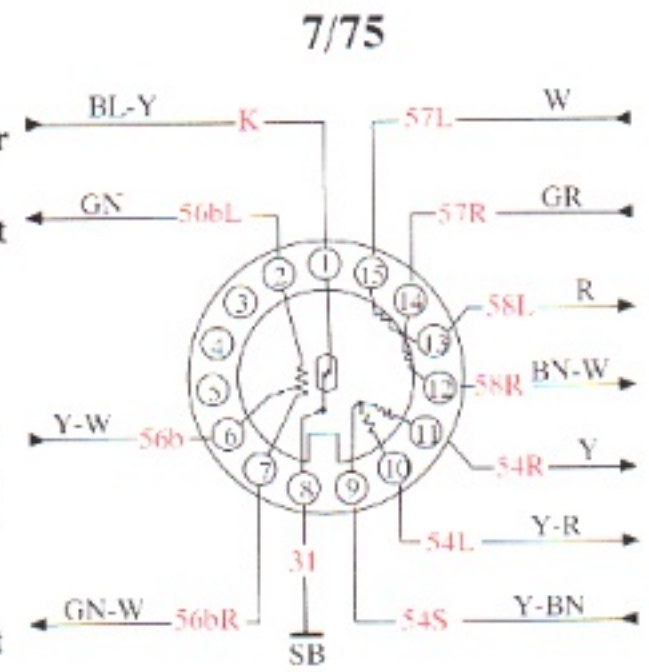

1 Indicator lamp, bulb malfunction indicator

2 Low beam, left

6 Switch, turn signal/ high-low beam (and automatic low beam, Netherlands and Belgium)

7 Low beam, right

8 Ground connection (for indicator lamp)

9 Brake light switch

10 Brake light, left

11 Brake light, right

12 Tail light

13 Tail light

14 Fuse no. 22

15 Fuse no. 21

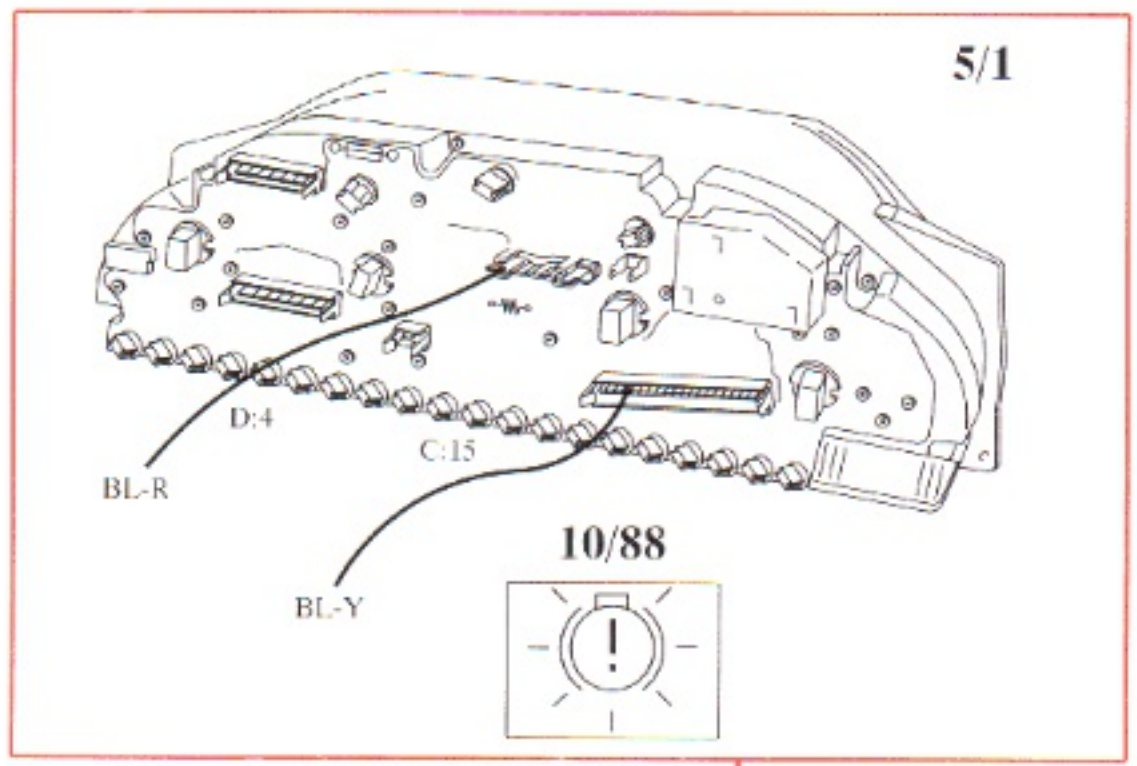
5/1
D:4
C:15
BL-R
BL-Y
10/88

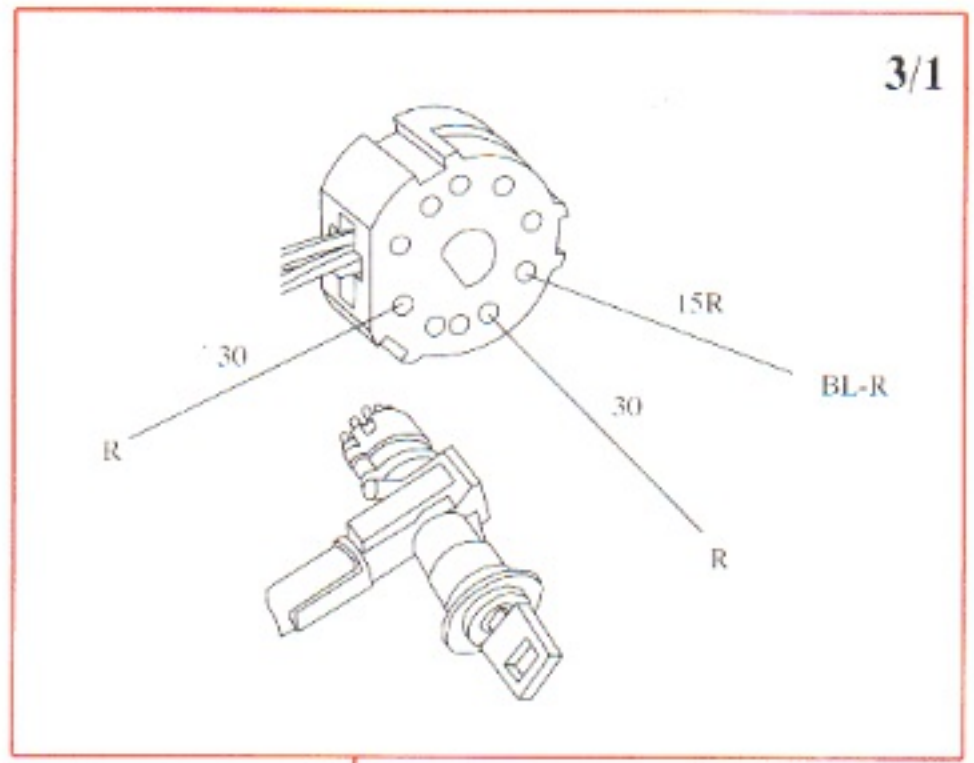
3/1
15R
30
BL-R
30
R
R

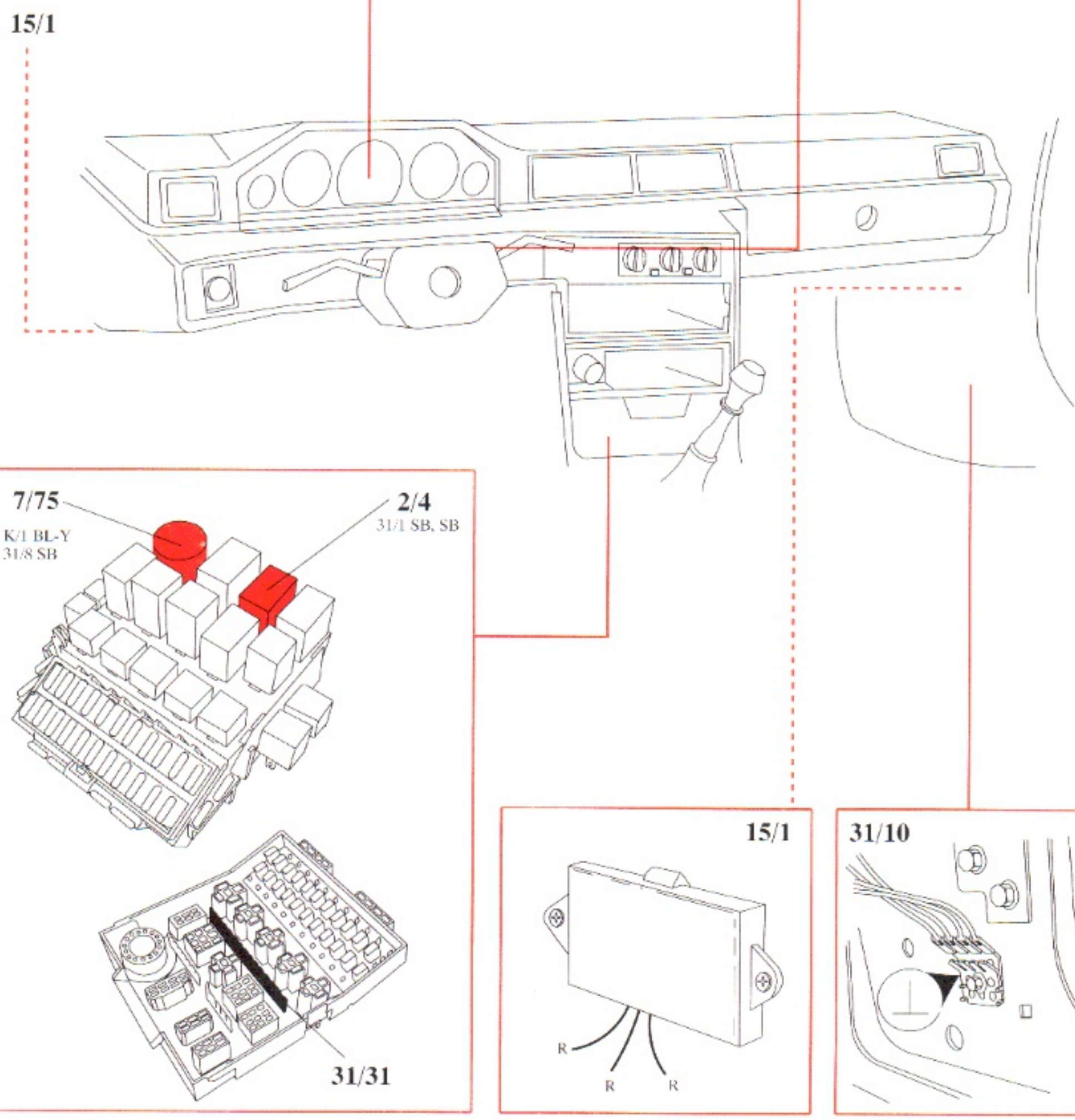
15/1
7/75
K/1 BL-Y
31/8 SB
2/4
31/1 SB, SB
31/31
15/1
R
R
R
31/10

Bulb malfunction indicator for cars with extra brake light

Indicator lamp, 10/88, lights up when a bulb fails in any of the following circuits:
- **Brake lights**
- **Low beam**
- **Tail lights**

*) USA/CDN
**) EU/OS

1/1
R
15/1
R R
30 30
3/1
15R
5/1
10/88
C:15
D:4
BL-R
BL-R
7/75
2/4
SB
31/10
31
SB
31/31
BL-Y
SB
Y
C1
Y-SB
*)
**)
Y-R
Y-SB
Y-R
Y-R
10/50
Y
SB
10/19
Y-SB
SB
1 2
SB
10/43
SB
SB
SB
31/13

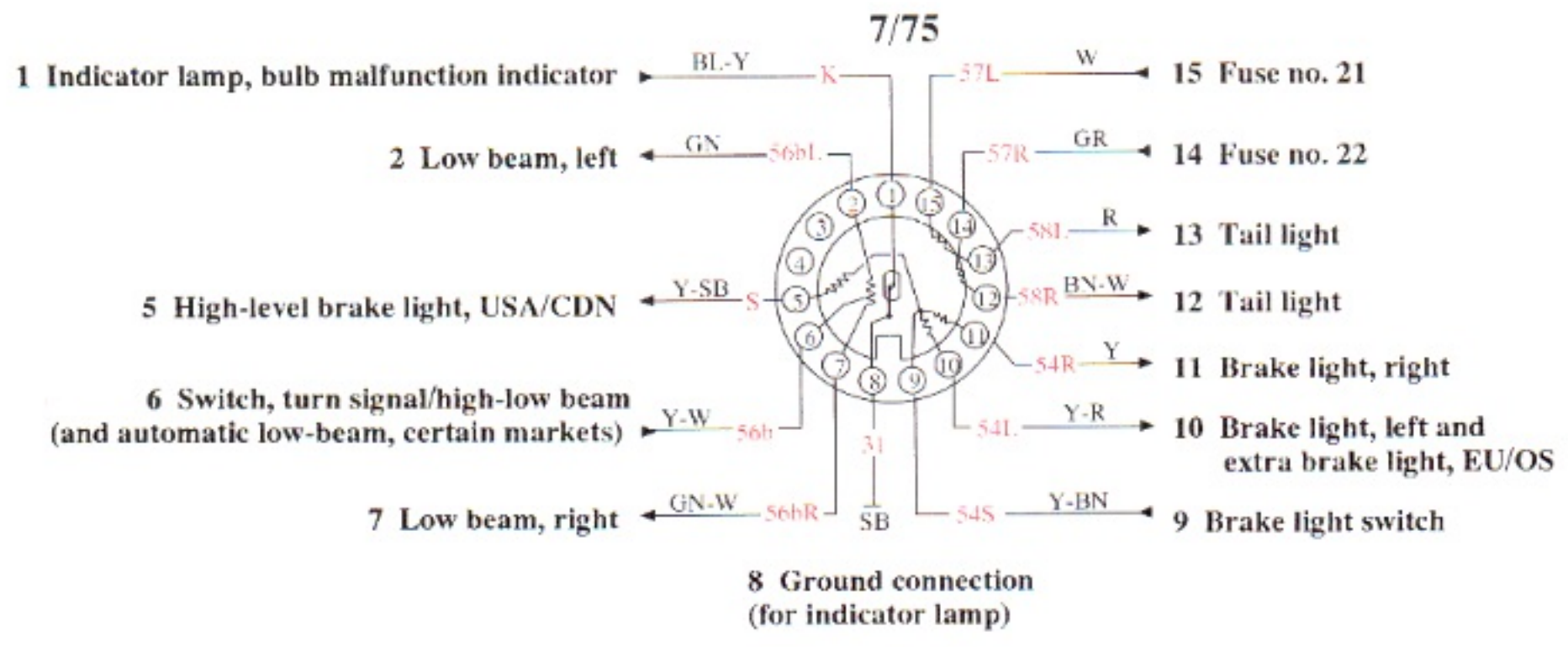

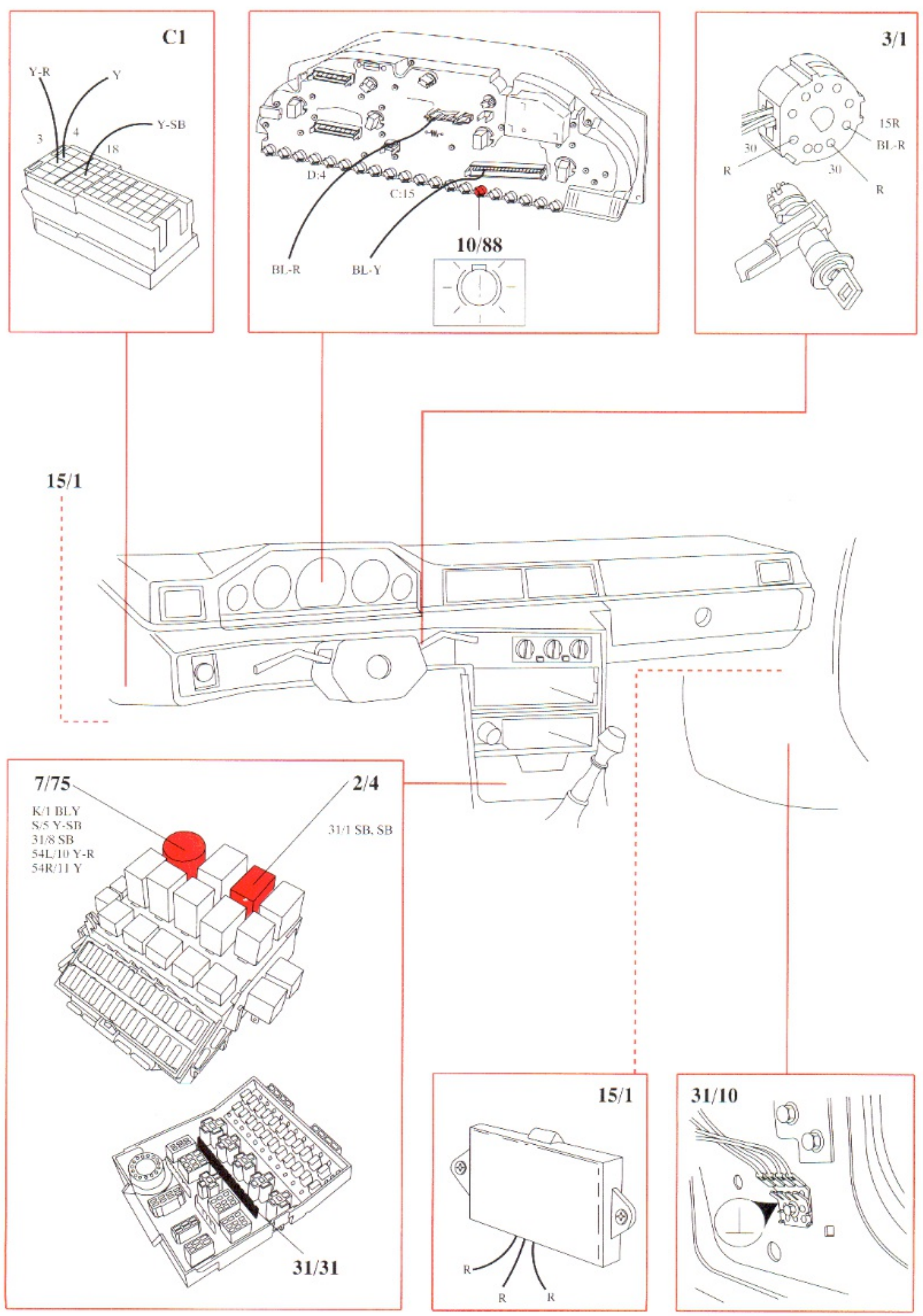
C1
Y-R
Y
Y-SB
3
4
18
D:4
C:15
BL-R
BL-Y
10/88
3/1
15R
BL-R
30
R
30
R
15/1
7/75
K/1 BLY
S/5 Y-SB
31/8 SB
54L/10 Y-R
54R/11 Y
2/4
31/1 SB, SB
31/31
15/1
R
R
R
31/10

Bulb malfunction indicator with brake monitor

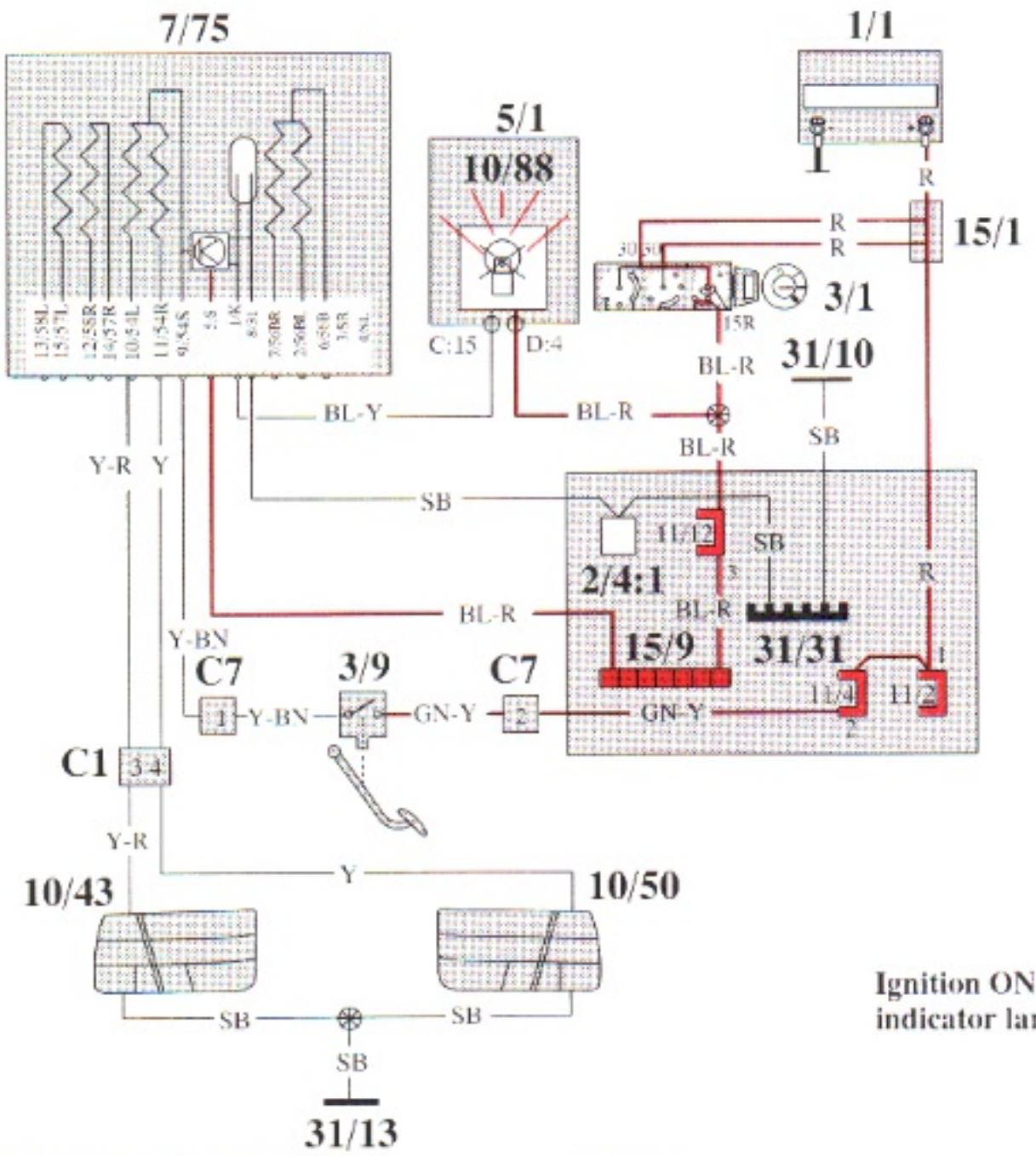

Ignition ON and indicator lamp lit

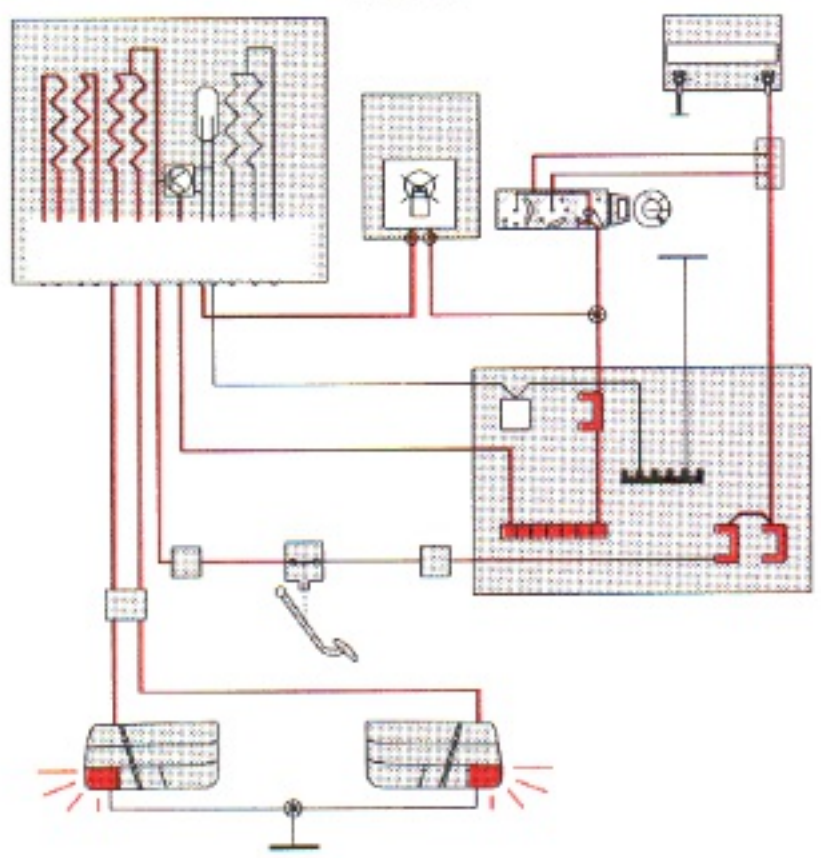

When the brake pedal is pressed, the indicator lamp goes out if the system is fault-free

7/75

1 Indicator lamp, bulb malfunction indicator

2 Low beam, left

5 Fuse-protected 15-rail in el. dist. unit

6 Switch, turn signal/high-low beam

7 Low beam, right

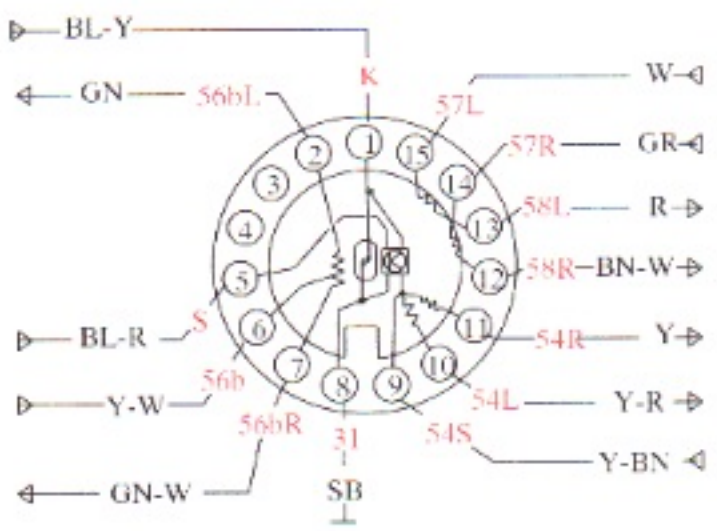

8 Ground connection (for indicator lamp)

15 Fuse no. 21

14 Fuse no. 22

13 Tail light

12 Tail light

11 Brake light, right

10 Brake light, left

9 Brake light switch

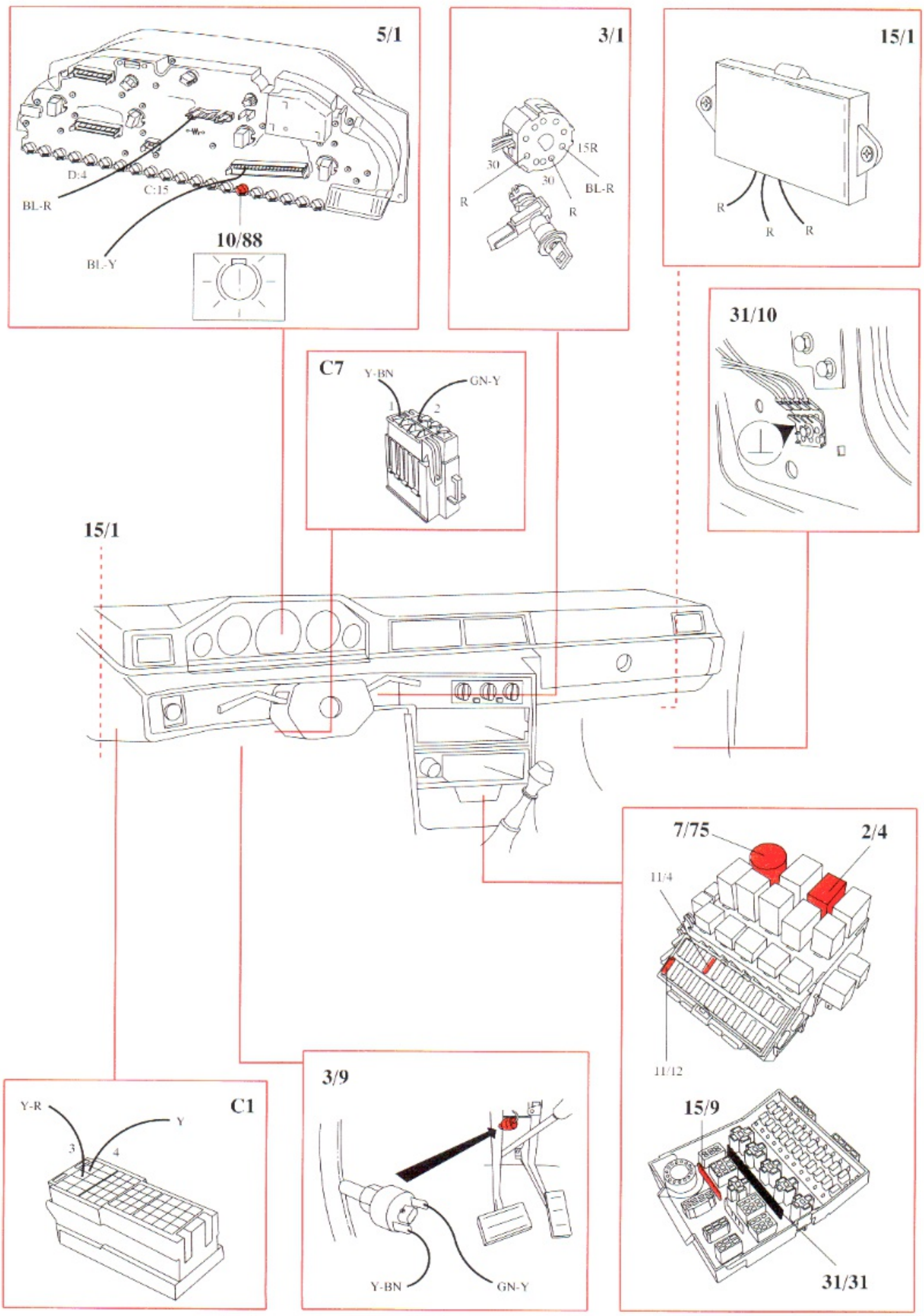
5/1
D:4
C:15
BL-R
BL-Y
10/88
3/1
30
15R
30
BL-R
R
R
15/1
R
R
R
31/10
C7
Y-BN
GN-Y
1
2
15/1
7/75
2/4
11/4
11/12
15/9
31/31
C1
Y-R
Y
3
4
3/9
Y-BN
GN-Y

Seat belt reminder

Ignition ON
Seat belt driver's side not on

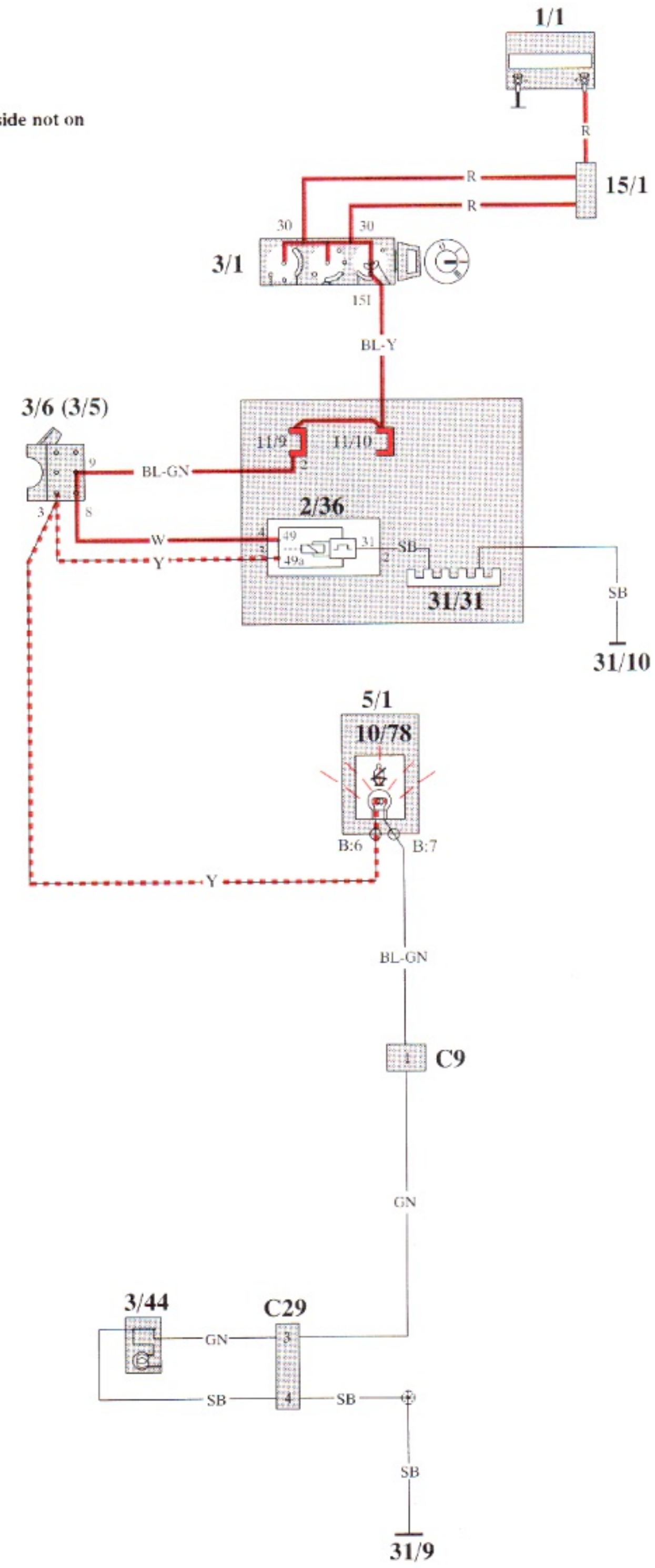

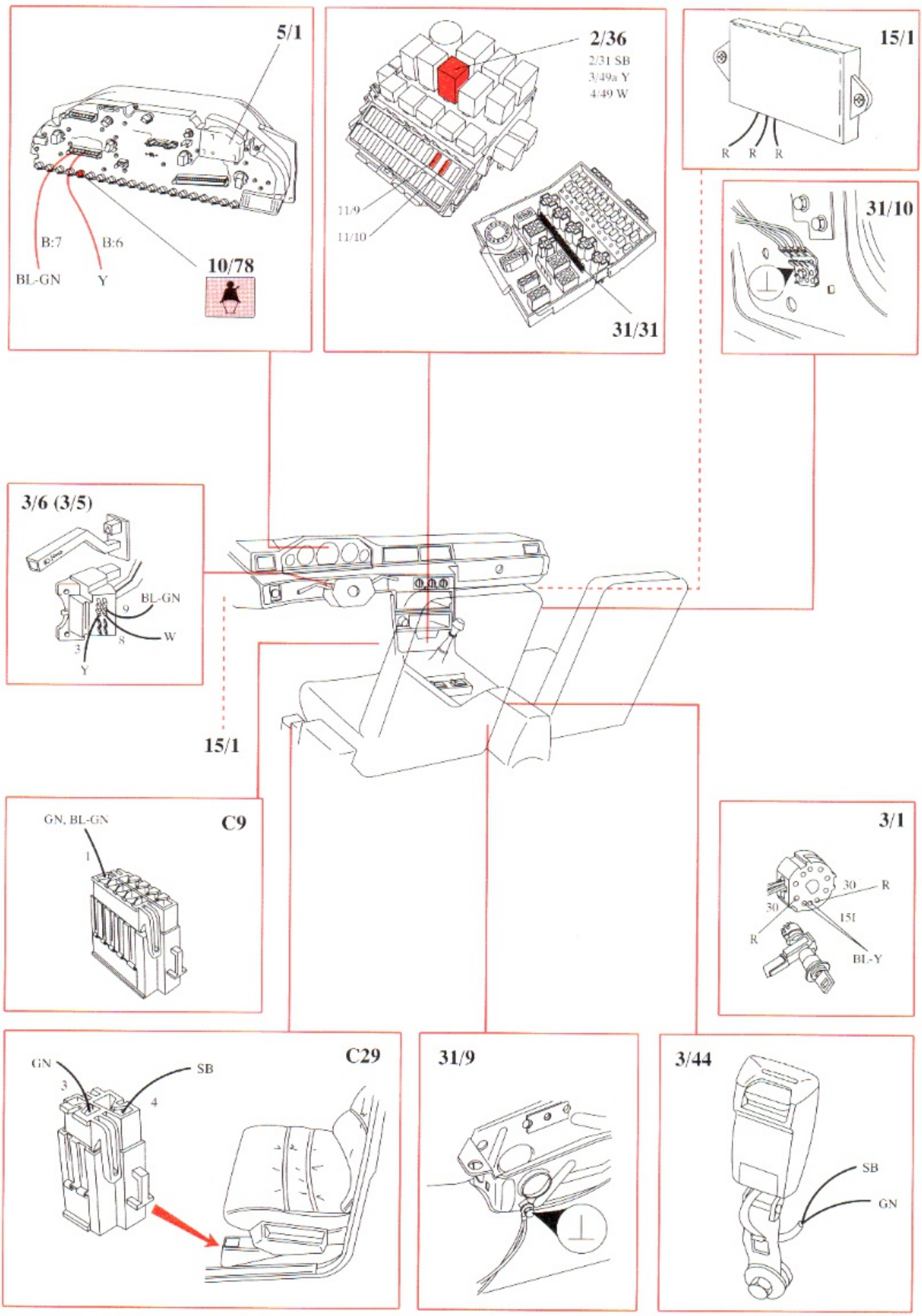
5/1
B:7
B:6
BL-GN
Y
10/78
2/36
2/31 SB
3/49a Y
4/49 W
11/9
11/10
31/31
15/1
R R R
31/10
3/6 (3/5)
BL-GN
9
W
3
8
Y
15/1
C9
GN, BL-GN
1
3/1
30
R
30
15I
R
BL-Y
C29
GN
SB
3
4
31/9
3/44
SB
GN

Seat belt reminder with ignition key warning, USA, Canada, Korea

Ignition ON
Seat belt not on
Indicator lamps and clock activated for 4-8 secs. after the ignition is switched ON

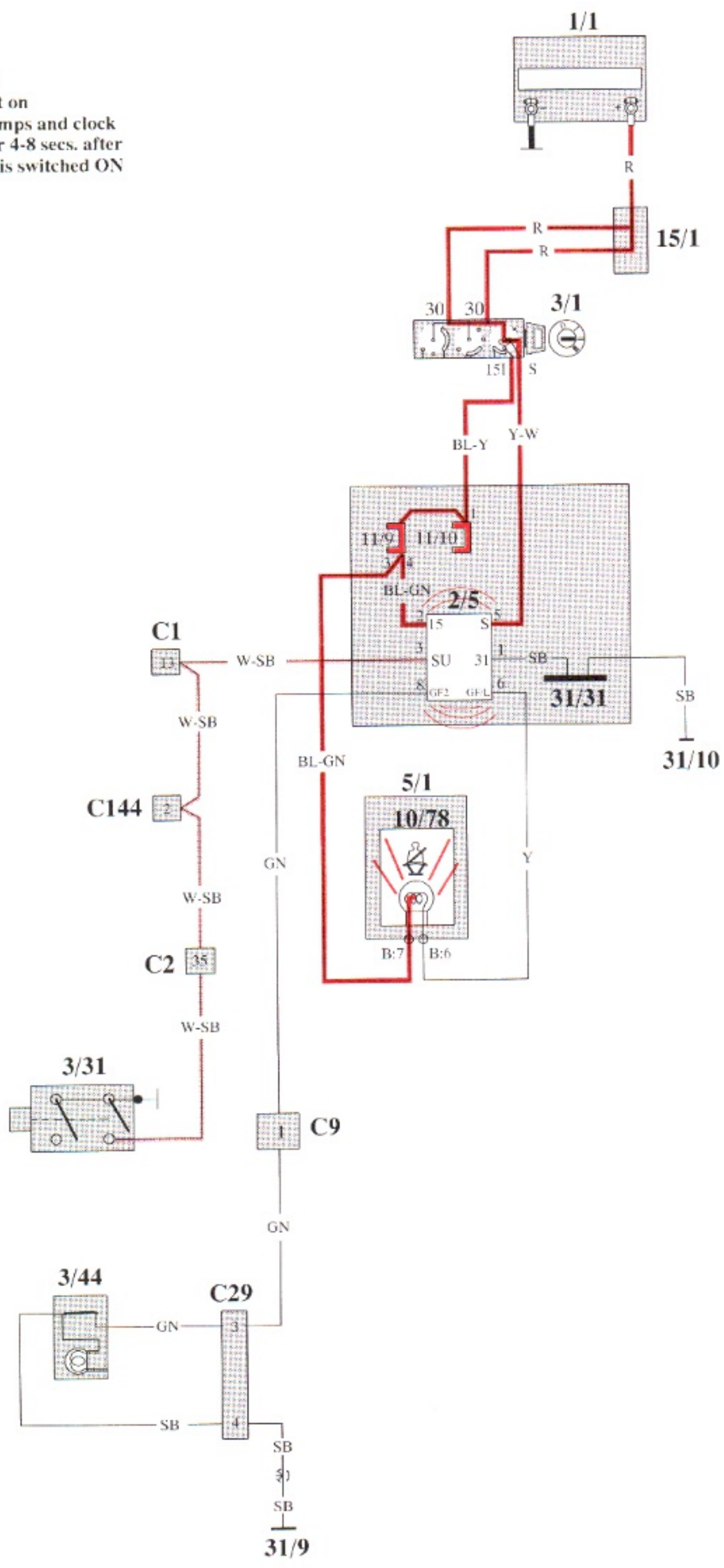

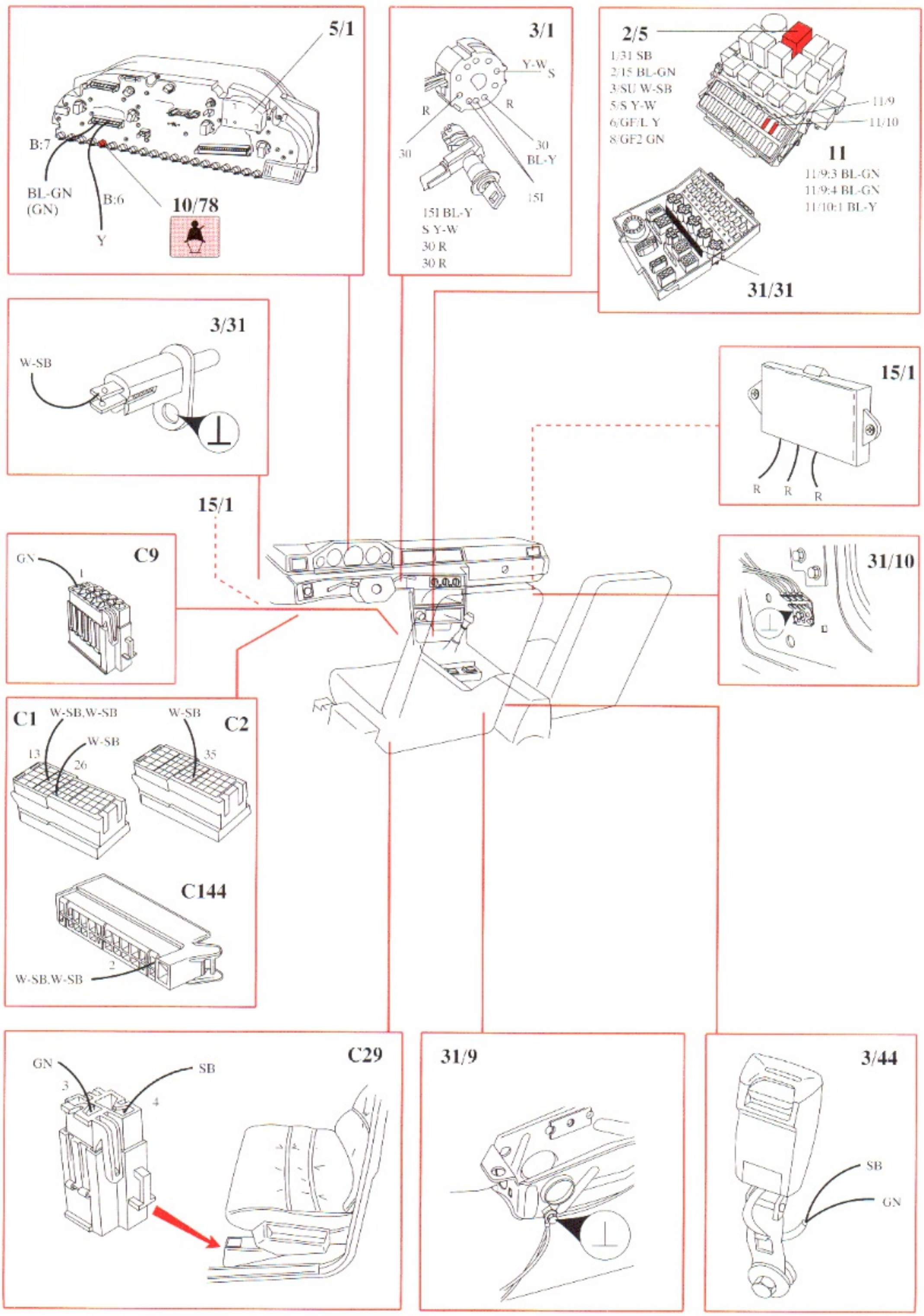
5/1
B:7
BL-GN
(GN)
B:6
Y
10/78
3/1
Y-W
S
R
R
30
30
BL-Y
151
151 BL-Y
S Y-W
30 R
30 R
2/5
1/31 SB
2/15 BL-GN
3/SU W-SB
5/S Y-W
6/GF/L Y
8/GF2 GN
11/9
11/10
11
11/9:3 BL-GN
11/9:4 BL-GN
11/10:1 BL-Y
31/31
3/31
W-SB
15/1
R
R
R
15/1
C9
GN
1
31/10
C1
W-SB,W-SB
W-SB
13
26
C2
W-SB
35
C144
2
W-SB,W-SB
C29
GN
3
SB
4
31/9
3/44
SB
GN

Combined instrument

Instrument panel lamps

10/74 Warning lamp, exhaust gas temperature
10/75 Warning lamp, turbodiesel charge pressure
10/76 Warning lamp, diesel preheating
10/77 Warning lamp, SRS
10/78 Warning lamp, seat belts
10/79 Warning lamp, overdrive (aut.)/Gearshift indicator
10/80 Warning lamp, overdrive (man.)
10/82 Warning lamp, ABS
10/83 Warning lamp, parking brake
10/84 Warning lamp, brake warning
10/85 Warning lamp, high beam
10/86 Warning lamp, oil pressure
10/87 Warning lamp, charging
10/88 Warning lamp, bulb malfunction indicator
10/89 Warning lamp, rear foglights
10/90 Warning lamp, washer fluid level
10/91 Service indicator
10/92 Warning lamp, trailer
10/93 Warning lamp, Malfunction indicator lamp (MIL)
10/94 Warning lamp, right turn signal
10/95 Warning lamp, left turn signal

5/1A 8-pin connection

1 Right turn signal (BL-GN)
2 Reference ground, ground connector, left A-post (BN-GR)
3, 4 -
5 Instrument and control lighting (W)
6 Ignition coil socket 1 or generator socket W (R-W)
7 Engine coolant temp. (ECT) sensor (Y-SB)
8 Engine coolant temp. (ECT) sensor (Y-W)

5/1B 12-pin connection

1 Instrument and control lighting (BL)
2 Brake fluid level sensor (VO)
3 Parking brake switch (BN)
4 ABS (GN)
5 -
6 Seat belt reminder (Y)
7 Seat belt reminder (BL-GN)
8 Relay, glow plug system pos. 1 (OR)
9 -
10 Pressure sensor, turbodiesel (Y-R)
11 -
12 Crash sensor SRS pos. 3 (BN-SB)

5/1C 18-pin connection

1 Supply 30+ (GN-R)
2 Left turn signal (GN)
3 Fuel level sensor (GR-W)
4 Fuel level sensor (BN)
5 Rheostat adjustment pos. 2 (GN-BN)
6,7,8 -
9 Control module, (MFI) fuel system pos. 22, control module (DI) ignition system pos. 3 (BN-W)
10 -
11 Relay, exhaust temp. sensor (W)
13 Washer fluid level sensor (BL-W/R-SB)
14 Foglight switch pos. 5 (GR)
15 Bulb malfunction indicator pos. 1 (BL-Y)
16 Generator D+ (R)
17 Oil pressure sensor (SB)
18 High beam (BL-W)

5/1D 4-pin connection

1 Sensor, speedometer (GN-W)
2 Sensor, speedometer (BN-W)
3 Ground connection rail in el. dist. unit (BN)
4 Supply 15+ (BL-R)

5/1E 1-pin connection

Digital socket, cruise control (GN-OR), control module ECC (Y), O/D relay (aut.)/control module (MFI) fuel system (VO-W/VO-W)

5/1L 2-pin connection

1 Overdrive relay (man.) pos. 9 (Y-GR)
2 Overdrive relay (man.) USA/CDN pos. 5/ Overdrive relay (aut.) pos. 5 (Y-R/Y-R)

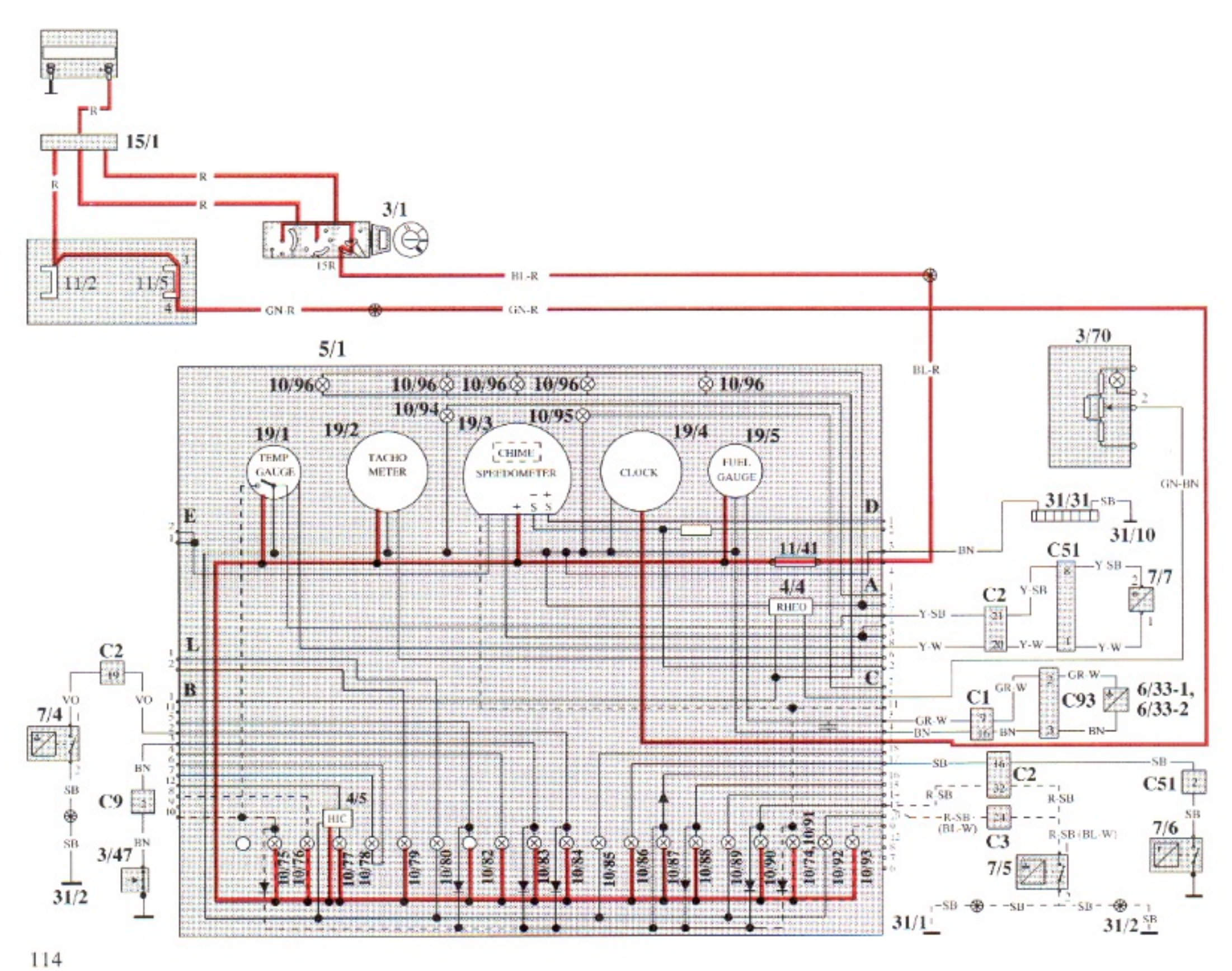

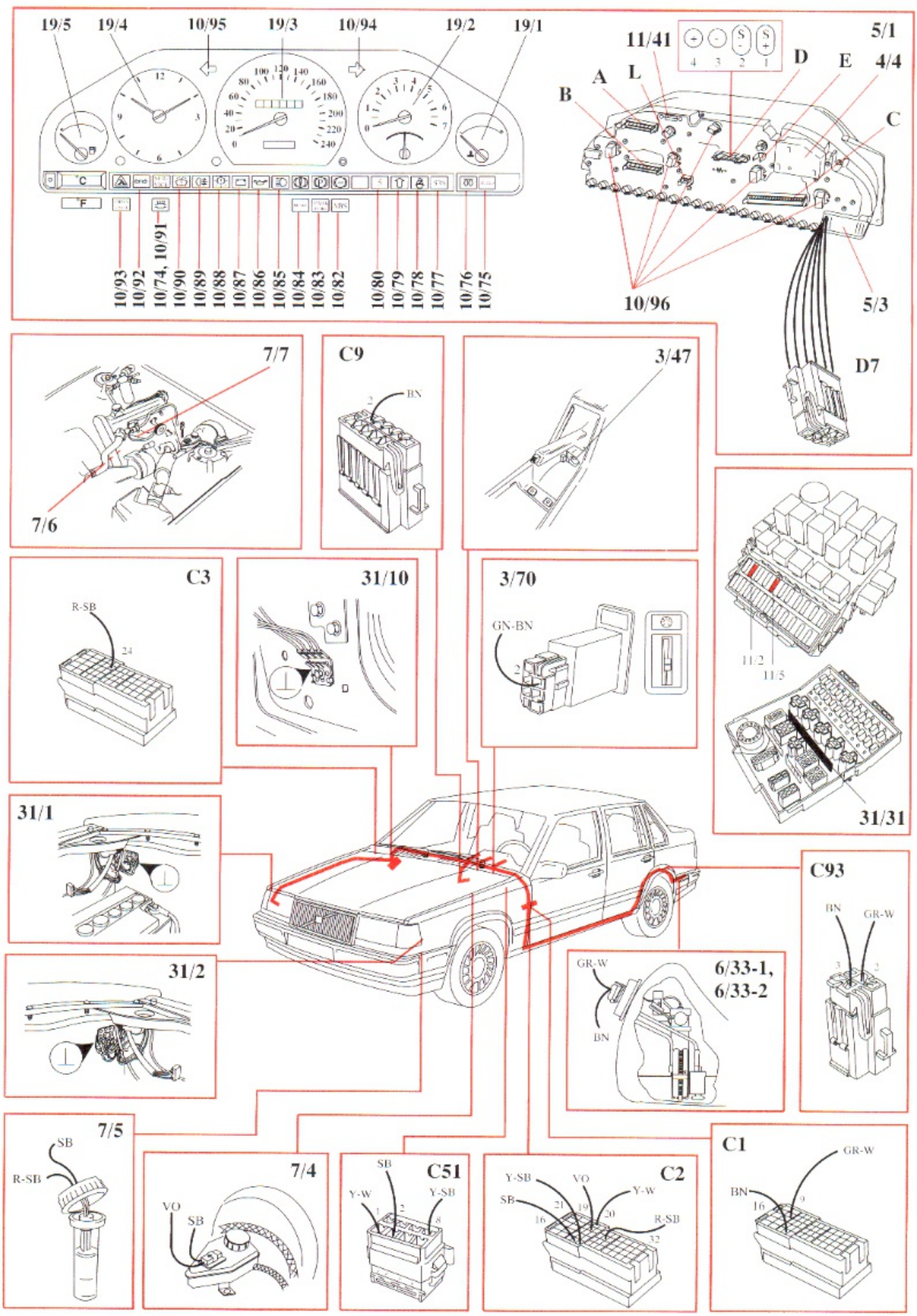
19/5
19/4
10/95
19/3
10/94
19/2
19/1
11/41
5/1
4/4
A
B
L
D
E
C
10/96
5/3
D7
10/93
10/92
10/74, 10/91
10/90
10/89
10/88
10/87
10/86
10/85
10/84
10/83
10/82
10/80
10/79
10/78
10/77
10/76
10/75
7/7
7/6
C9
BN
3/47
C3
R-SB
24
31/10
3/70
GN-BN
11/2
11/5
31/31
31/1
31/2
C93
BN
GR-W
6/33-1,
6/33-2
GR-W
BN
7/5
SB
R-SB
7/4
VO
SB
C51
SB
Y-W
Y-SB
C2
Y-SB
VO
SB
Y-W
R-SB
C1
GR-W
BN

Speedometer and tripmeter

Ignition ON
Car is driven

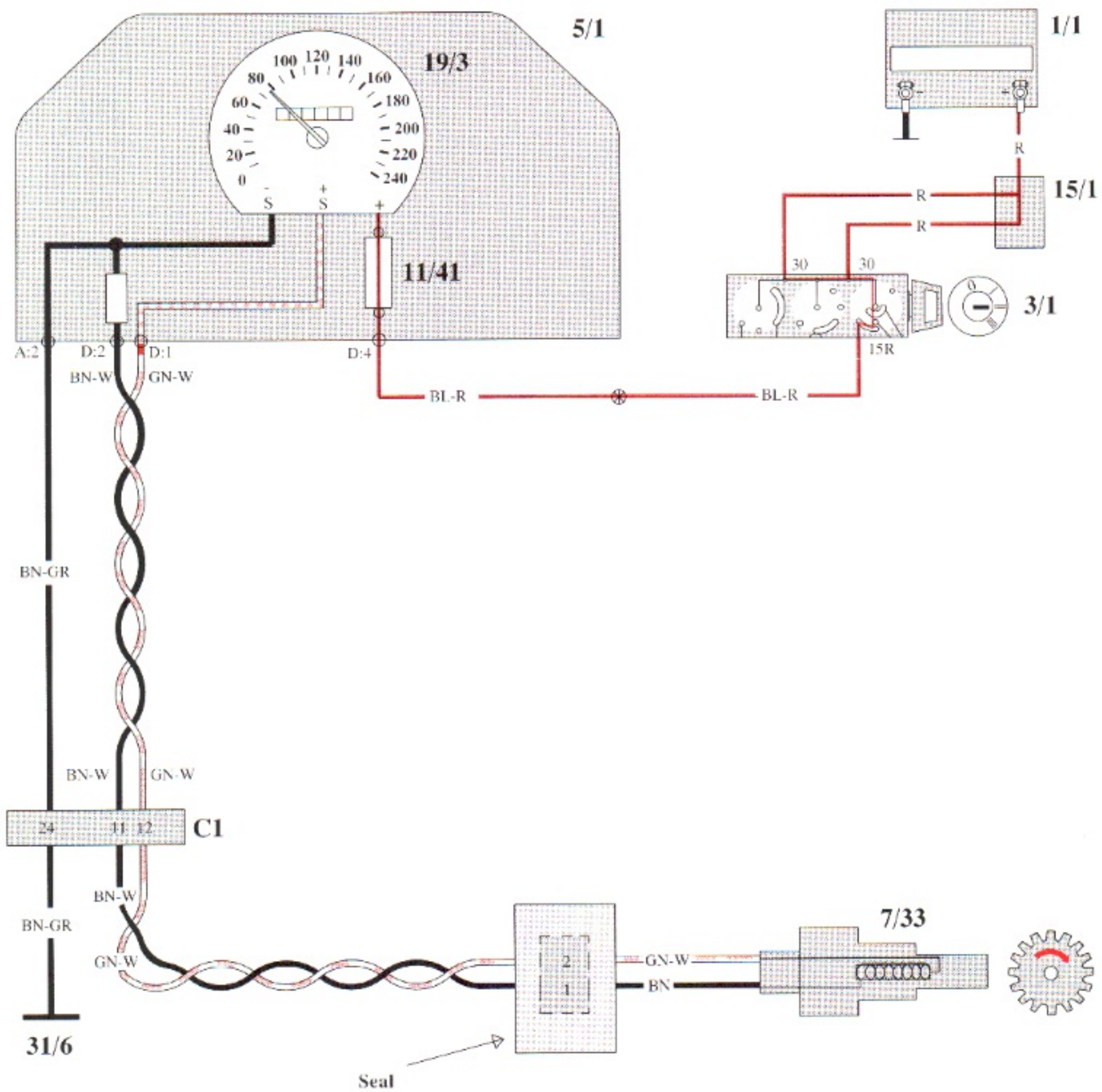

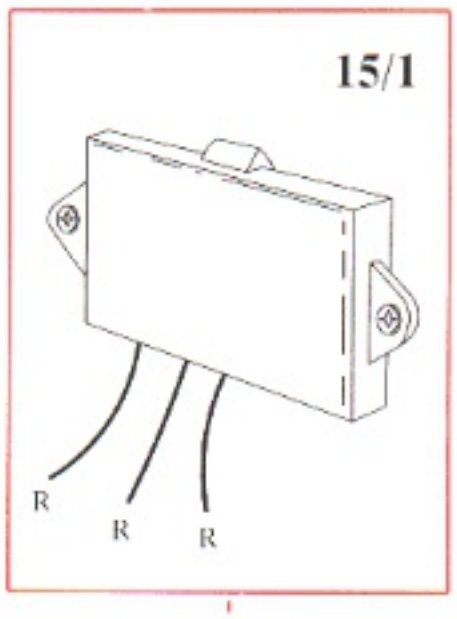
15/1
R
R
R

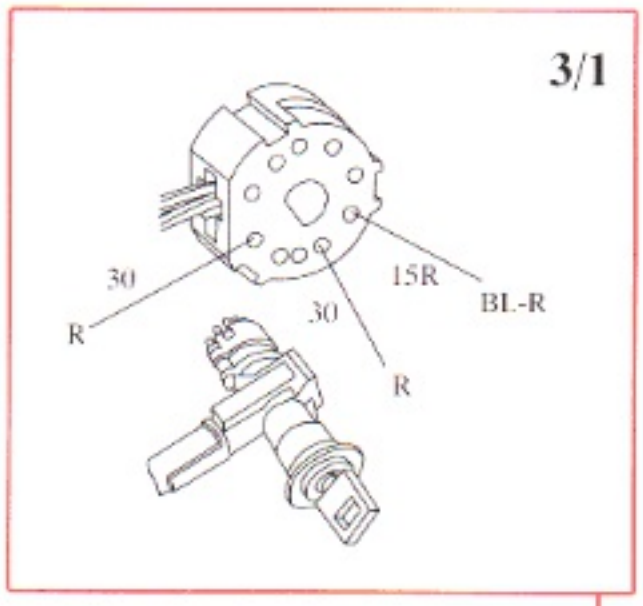
3/1
30
R
30
R
15R
BL-R

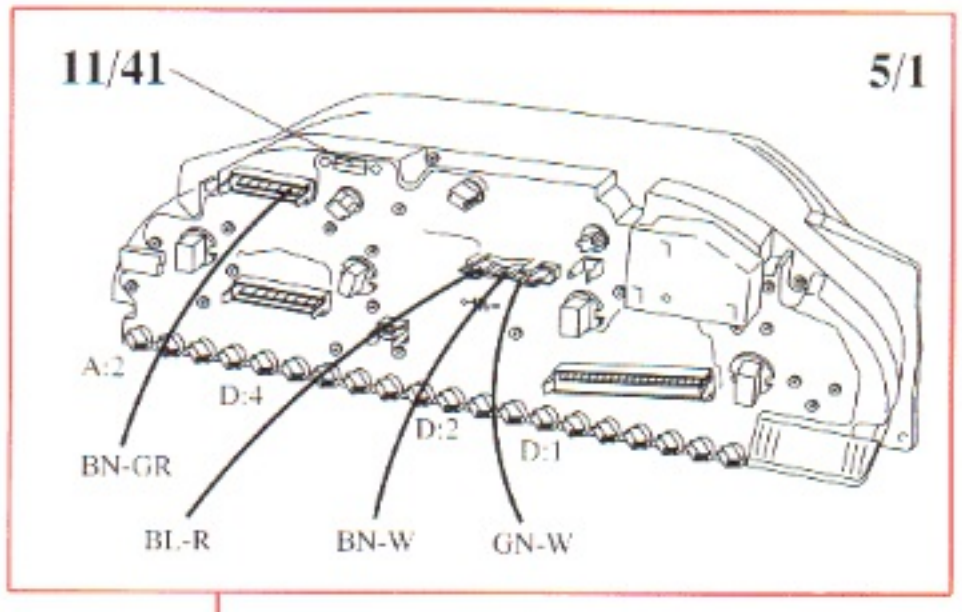
11/41
5/1
A:2
D:4
D:2
D:1
BN-GR
BL-R
BN-W
GN-W

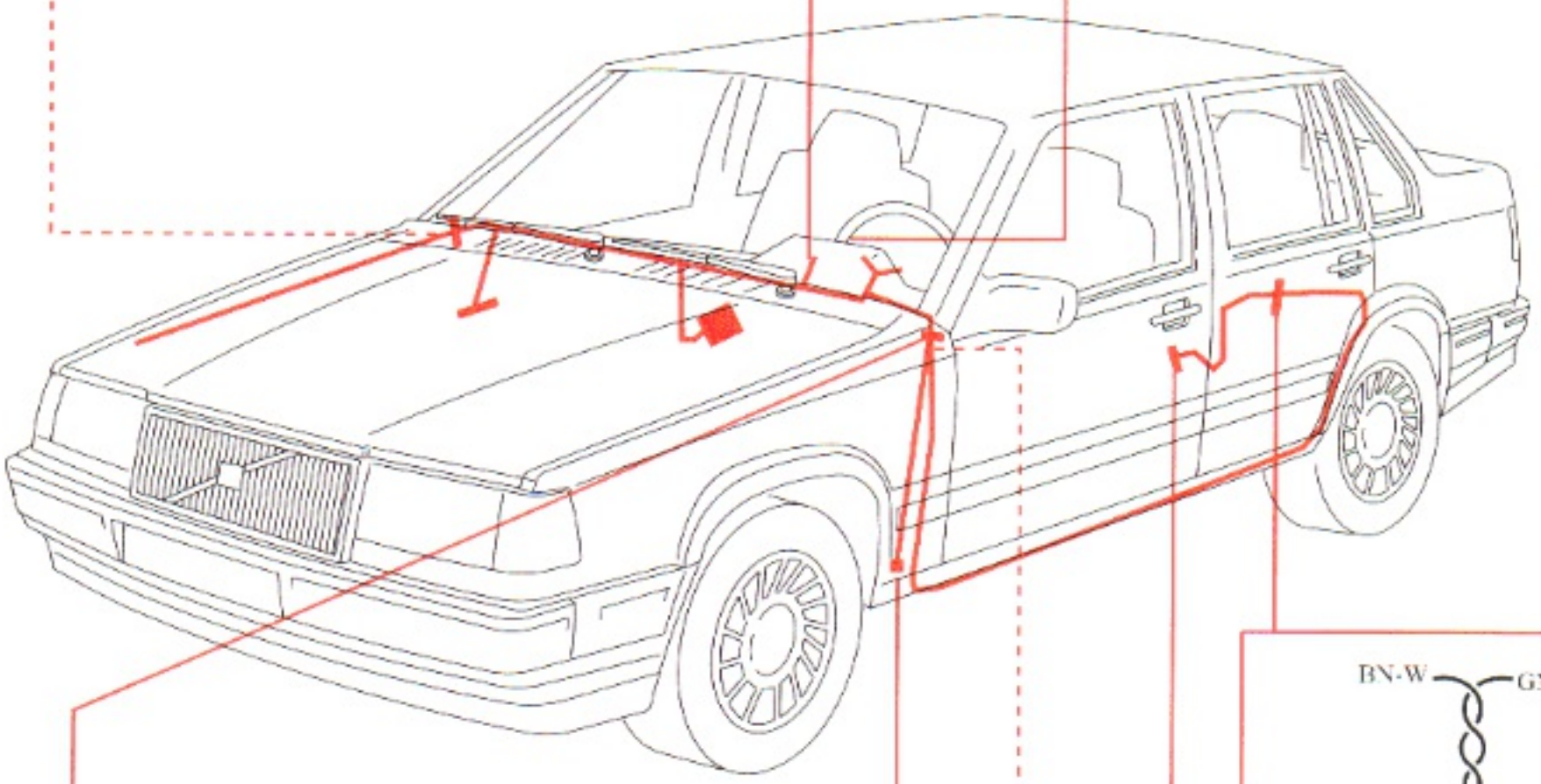

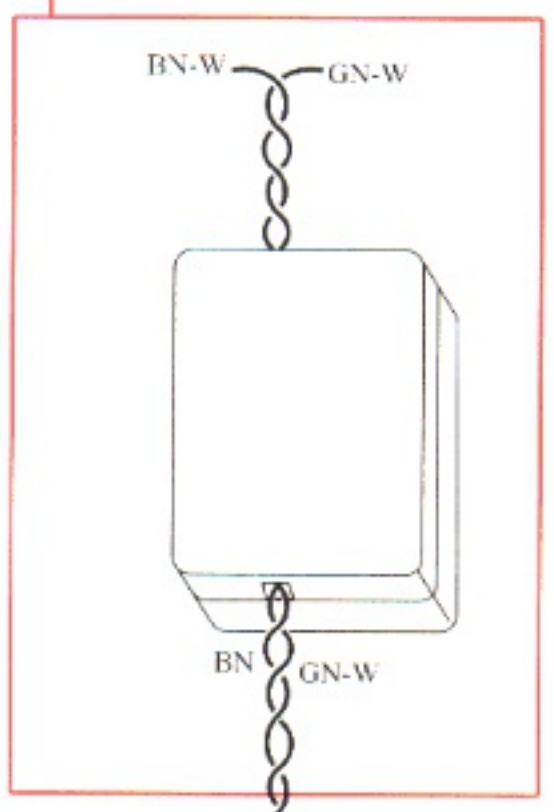
BN-W
GN-W
BN
GN-W

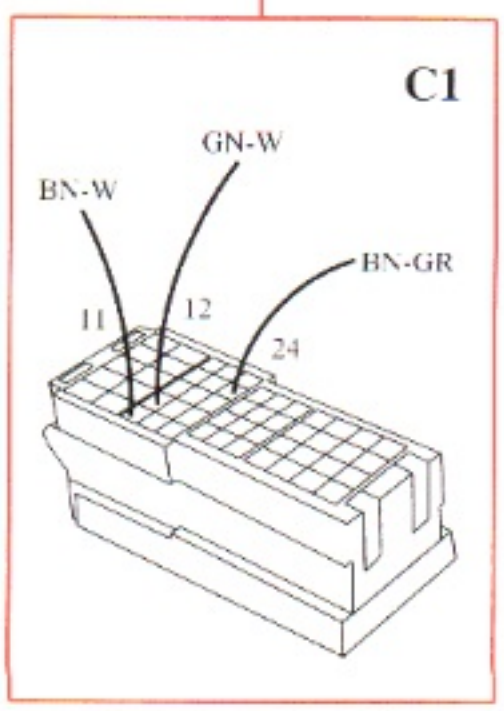
C1
GN-W
BN-W
BN-GR
11
12
24

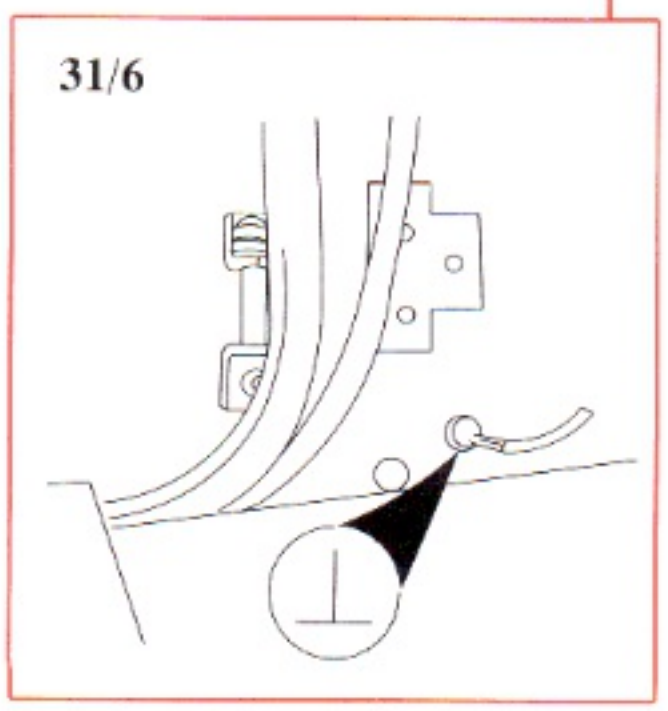
31/6

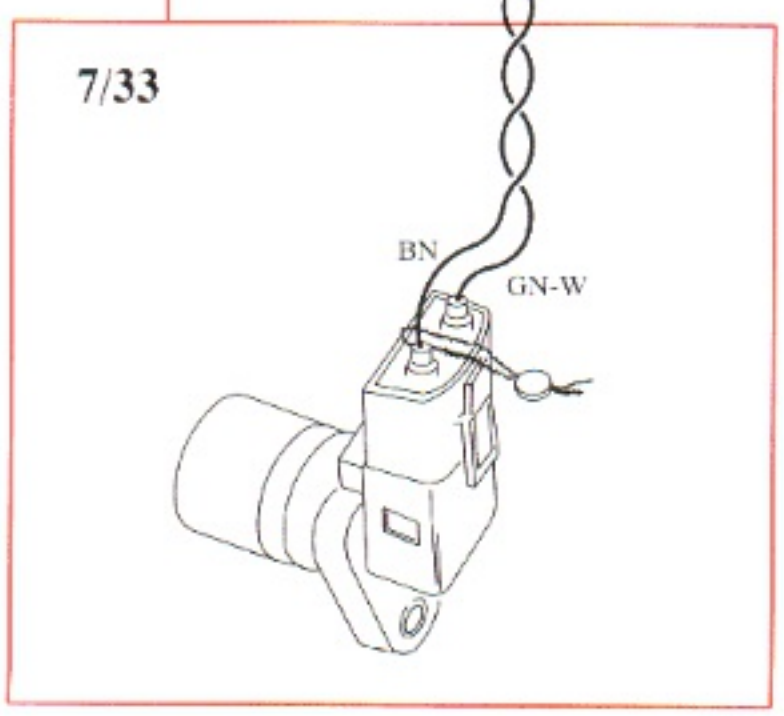
7/33
BN
GN-W

Ambient temperature gauge

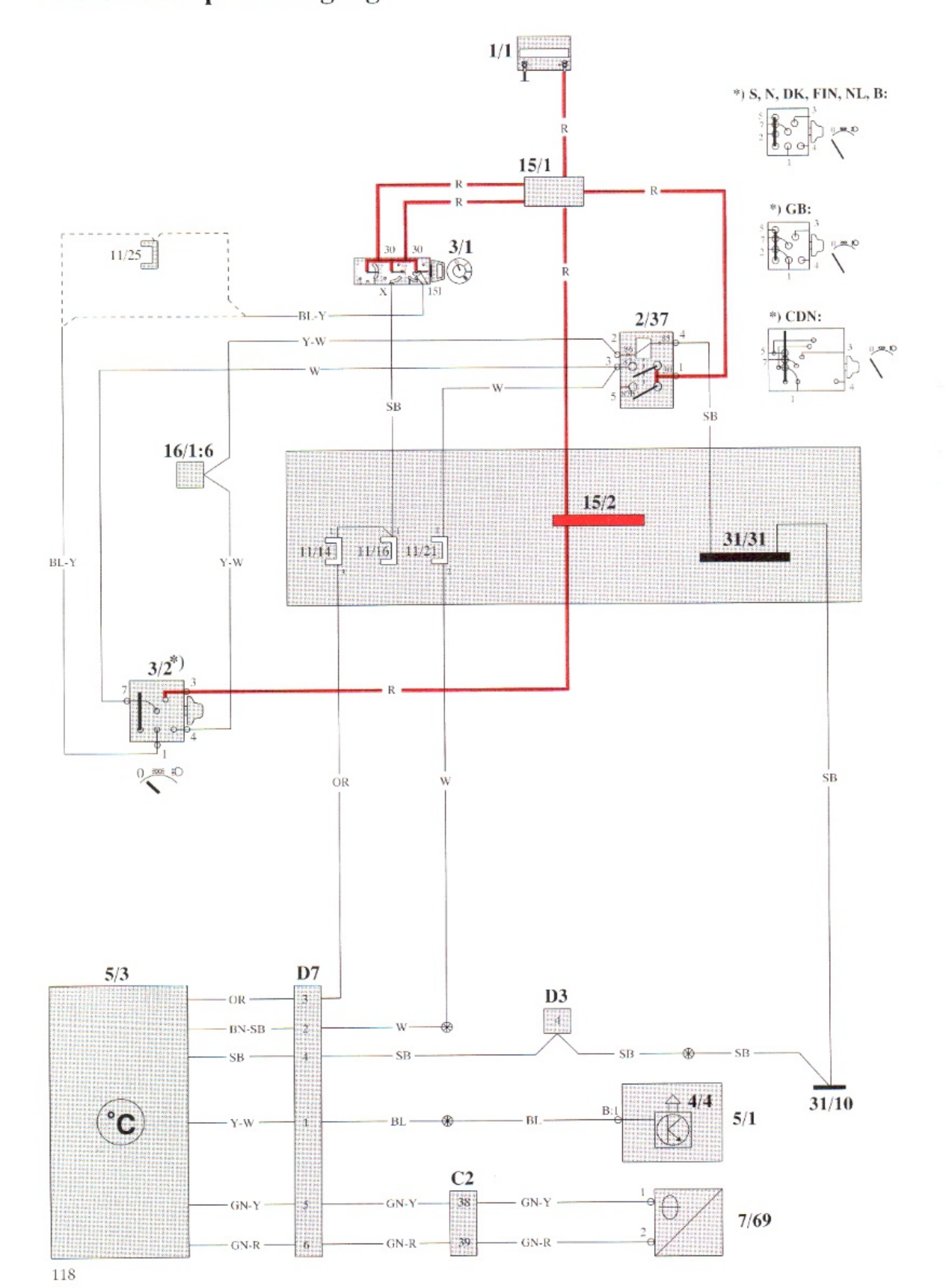

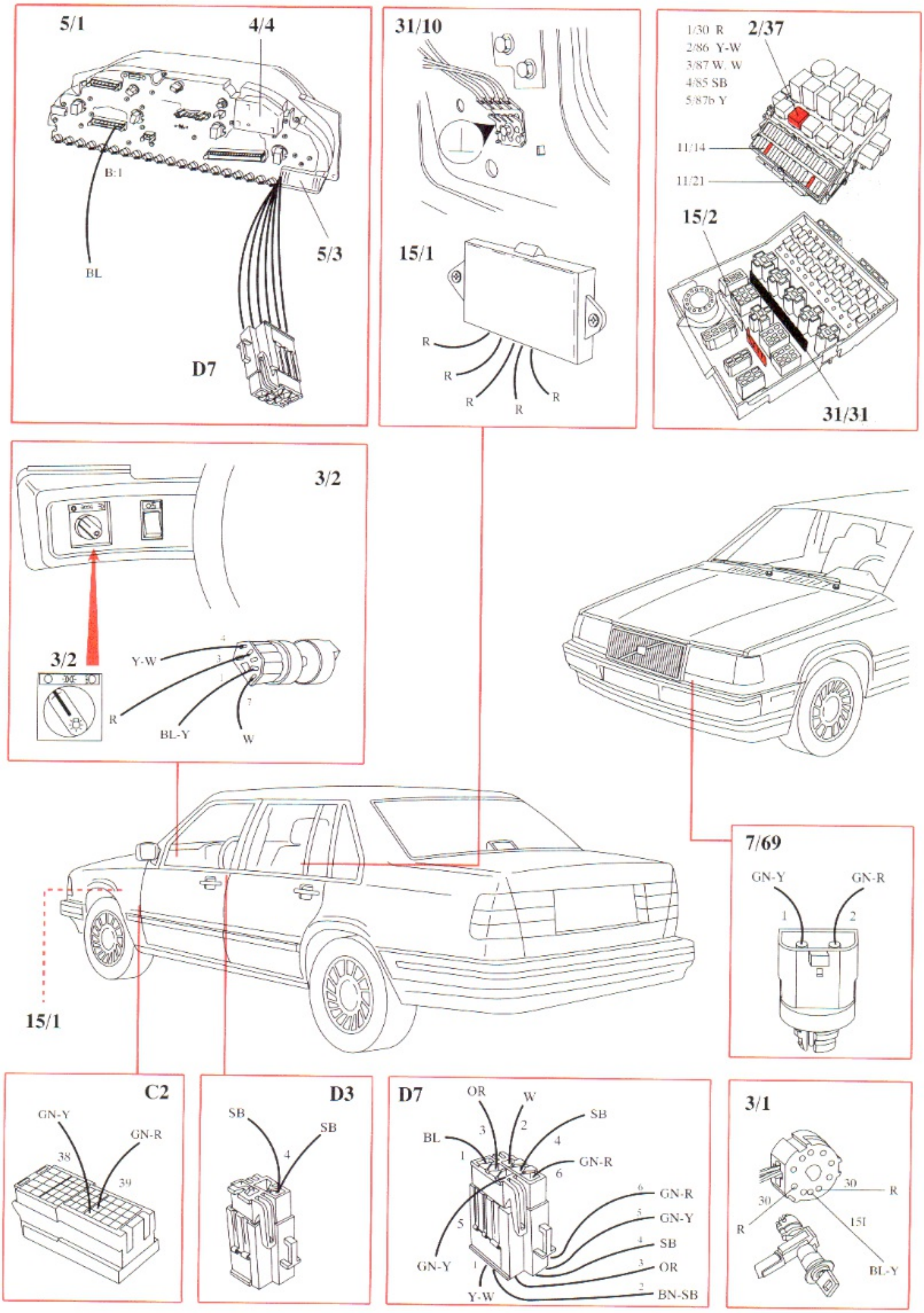
5/1
4/4
B:1
BL
5/3
D7
31/10
15/1
R
R
R
R
R
1/30 R
2/86 Y-W
3/87 W, W
4/85 SB
5/87b Y
2/37
11/14
11/21
15/2
31/31
3/2
3/2
Y-W
R
BL-Y
W
15/1
7/69
GN-Y
GN-R
1
2
C2
GN-Y
GN-R
38
39
D3
SB
SB
4
D7
OR
W
SB
BL
3
2
4
1
GN-R
6
GN-R
GN-Y
SB
OR
BN-SB
5
GN-Y
1
Y-W
3/1
30
R
30
R
15I
BL-Y

Radio connections, 4-door

*) Connector in radio compartment, 1-pin
**) Connector at power antenna, 4-pin (junction)

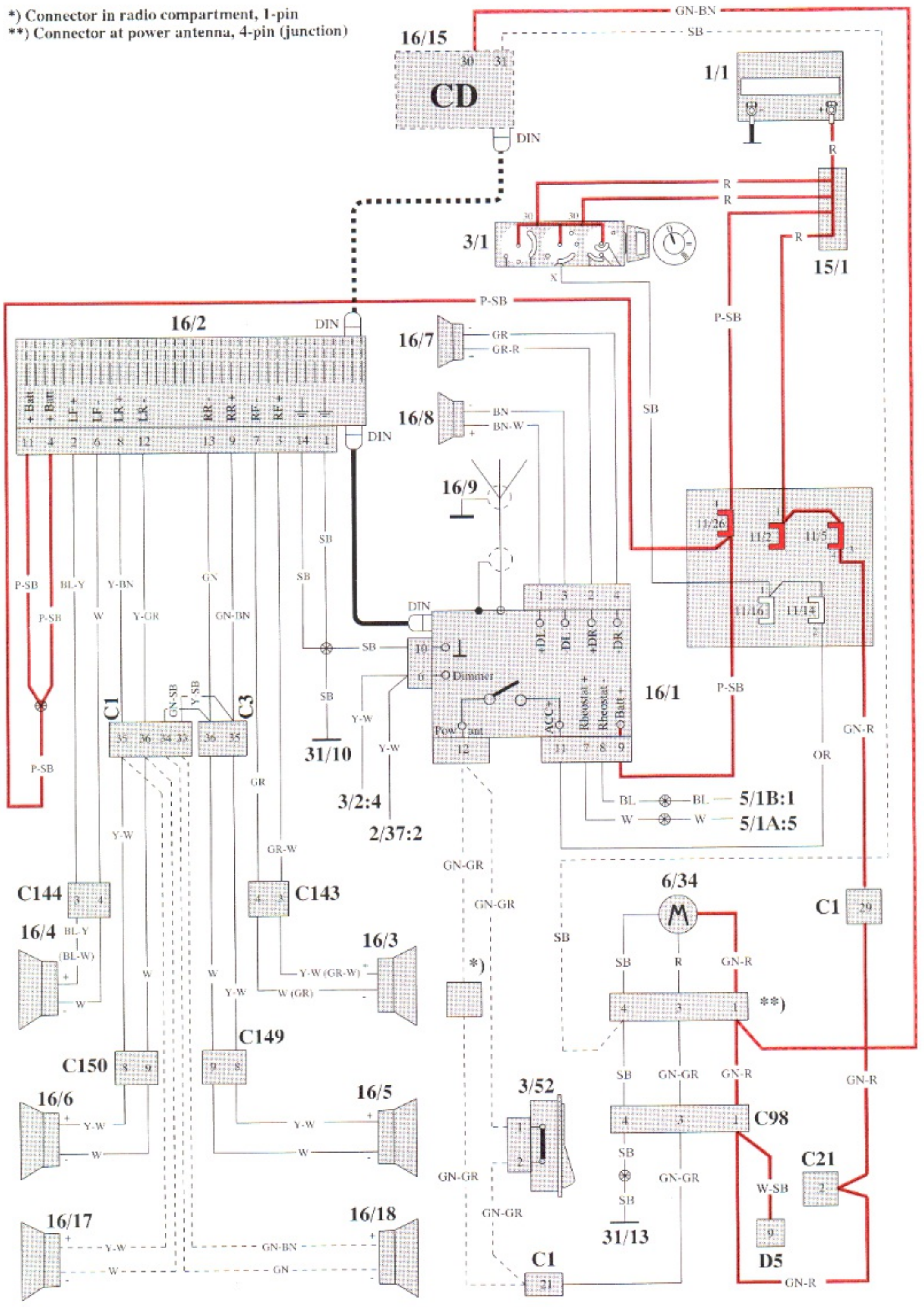

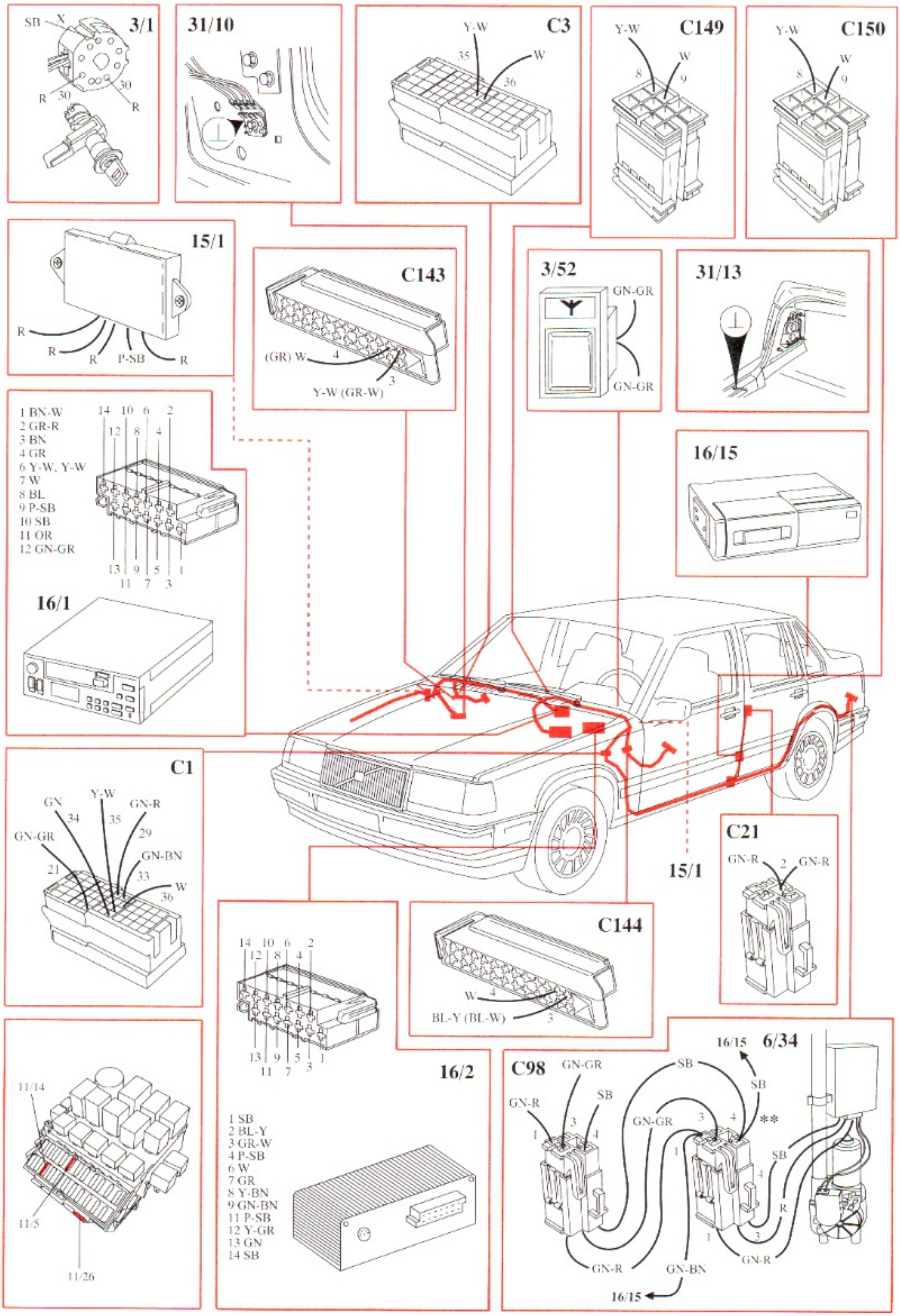
3/1
SB
X
R
30
30
R
31/10
C3
Y-W
35
W
36
C149
Y-W
W
8
9
C150
Y-W
W
8
9
15/1
R
R
R
P-SB
R
C143
(GR) W
4
3
Y-W (GR-W)
3/52
GN-GR
GN-GR
31/13
1 BN-W
2 GR-R
3 BN
4 GR
6 Y-W, Y-W
7 W
8 BL
9 P-SB
10 SB
11 OR
12 GN-GR
14 10 6 2
12 8 4
13 9 5 1
11 7 3
16/15
16/1
C1
GN
Y-W
GN-R
34
35
29
GN-GR
GN-BN
21
33
W
36
15/1
C21
GN-R
2
GN-R
C144
W
4
BL-Y (BL-W)
3
14 10 6 2
12 8 4
13 9 5 1
11 7 3
16/2
1 SB
2 BL-Y
3 GR-W
4 P-SB
6 W
7 GR
8 Y-BN
9 GN-BN
11 P-SB
12 Y-GR
13 GN
14 SB
11/14
11/5
11/26
C98
GN-GR
SB
GN-R
SB
GN-GR
SB
SB
16/15
6/34
**
SB
R
GN-R
GN-BN
GN-R
16/15

Radio connections, 5-door

*) Connector in radio compartment, 1-pin
**) Connector at power antenna, 4-pin (junction)

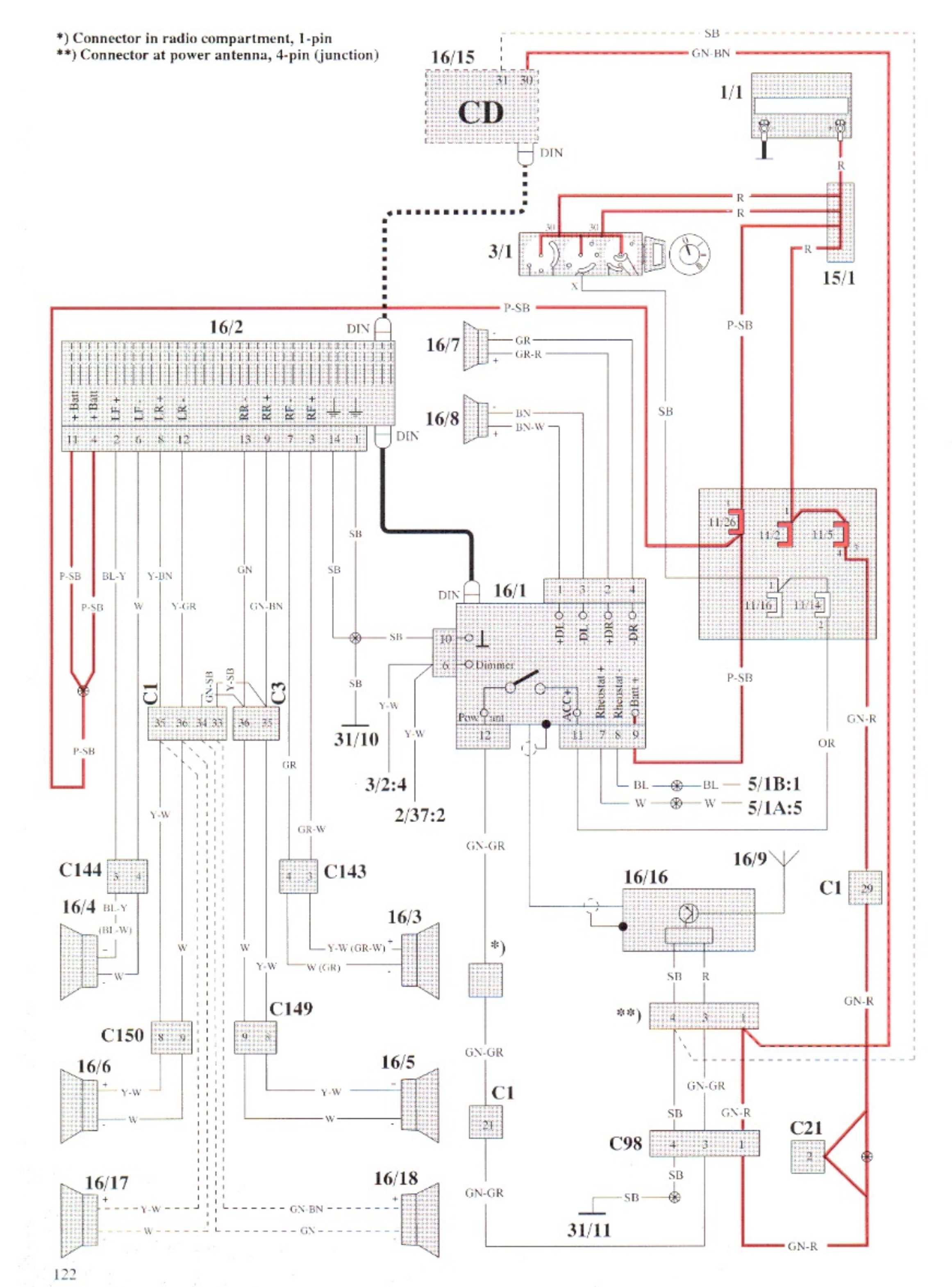

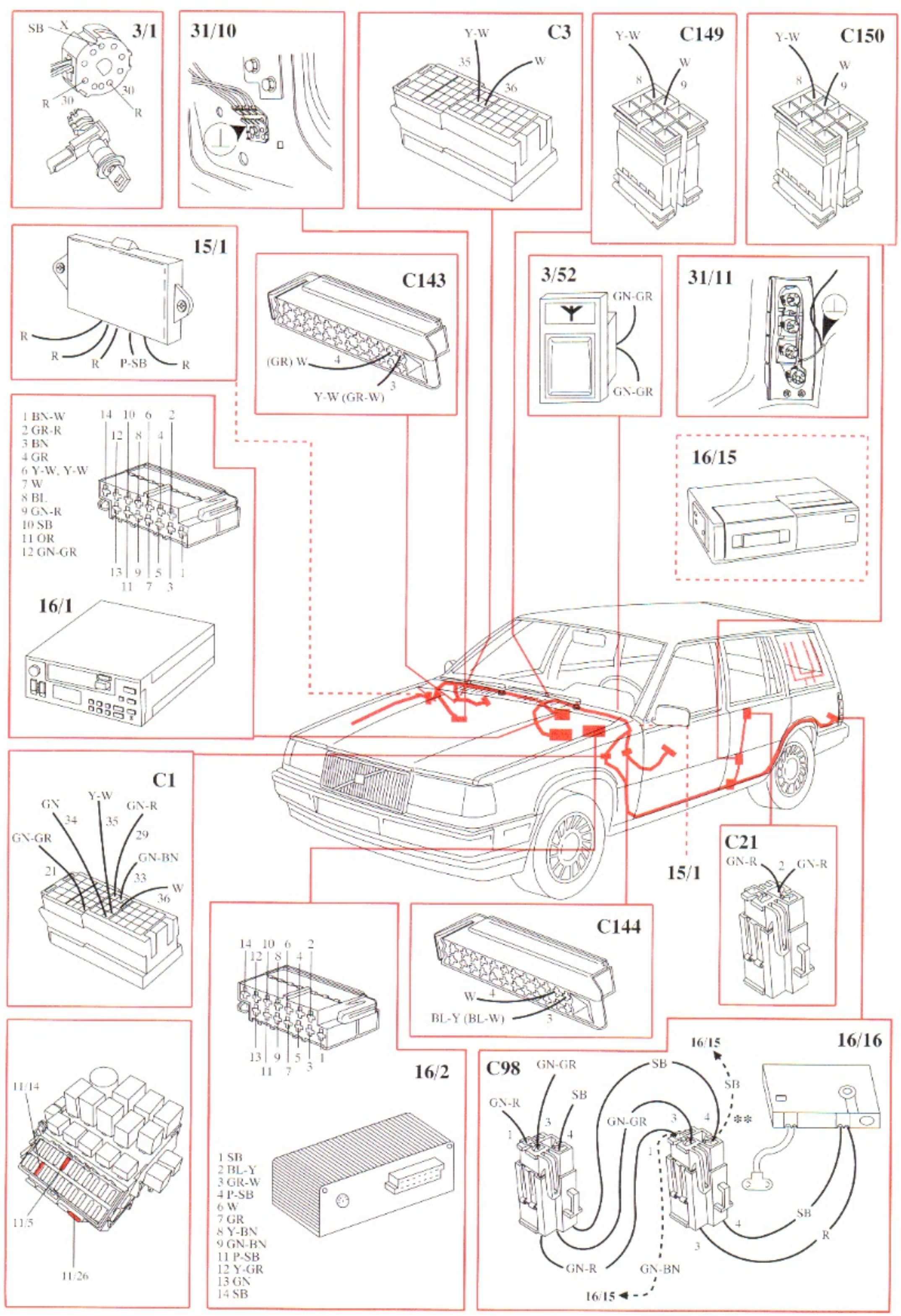
3/1
SB
X
R
30
30
R
31/10
C3
Y-W
35
W
36
C149
Y-W
W
8
9
C150
Y-W
W
8
9
15/1
R
R
R
P-SB
R
C143
(GR) W
4
3
Y-W (GR-W)
3/52
GN-GR
GN-GR
31/11
1 BN-W
2 GR-R
3 BN
4 GR
6 Y-W, Y-W
7 W
8 BL
9 GN-R
10 SB
11 OR
12 GN-GR
14 10 6 2
12 8 4
13 9 5 1
11 7 3
16/15
16/1
C1
GN
Y-W
GN-R
34
35
29
GN-GR
GN-BN
21
33
W
36
15/1
C21
GN-R
2
GN-R
C144
W
4
BL-Y (BL-W)
3
14 10 6 2
12 8 4
13 9 5 1
11 7 3
16/2
1 SB
2 BL-Y
3 GR-W
4 P-SB
6 W
7 GR
8 Y-BN
9 GN-BN
11 P-SB
12 Y-GR
13 GN
14 SB
16/16
16/15
C98
GN-GR
SB
SB
GN-R
SB
GN-GR
3
4
1
3
4
1
**
SB
R
4
3
GN-R
GN-BN
16/15
11/14
11/5
11/26

Radio connections, 4-door (Radio with integrated amplifier)

*) Connector in radio compartment, 1-pin
**) Connector at power antenna, 4-pin (junction)
***) Not for USA/CDN

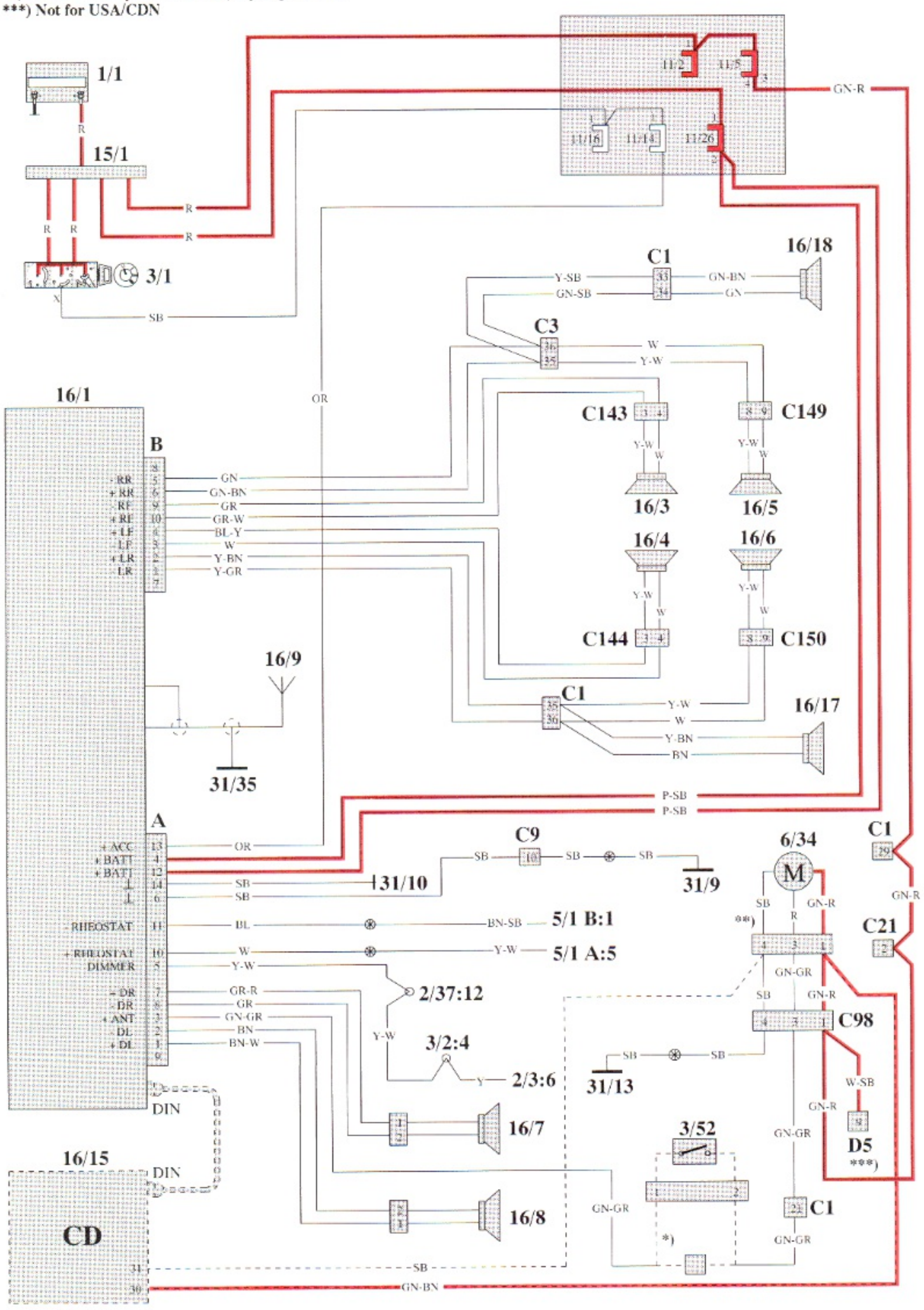

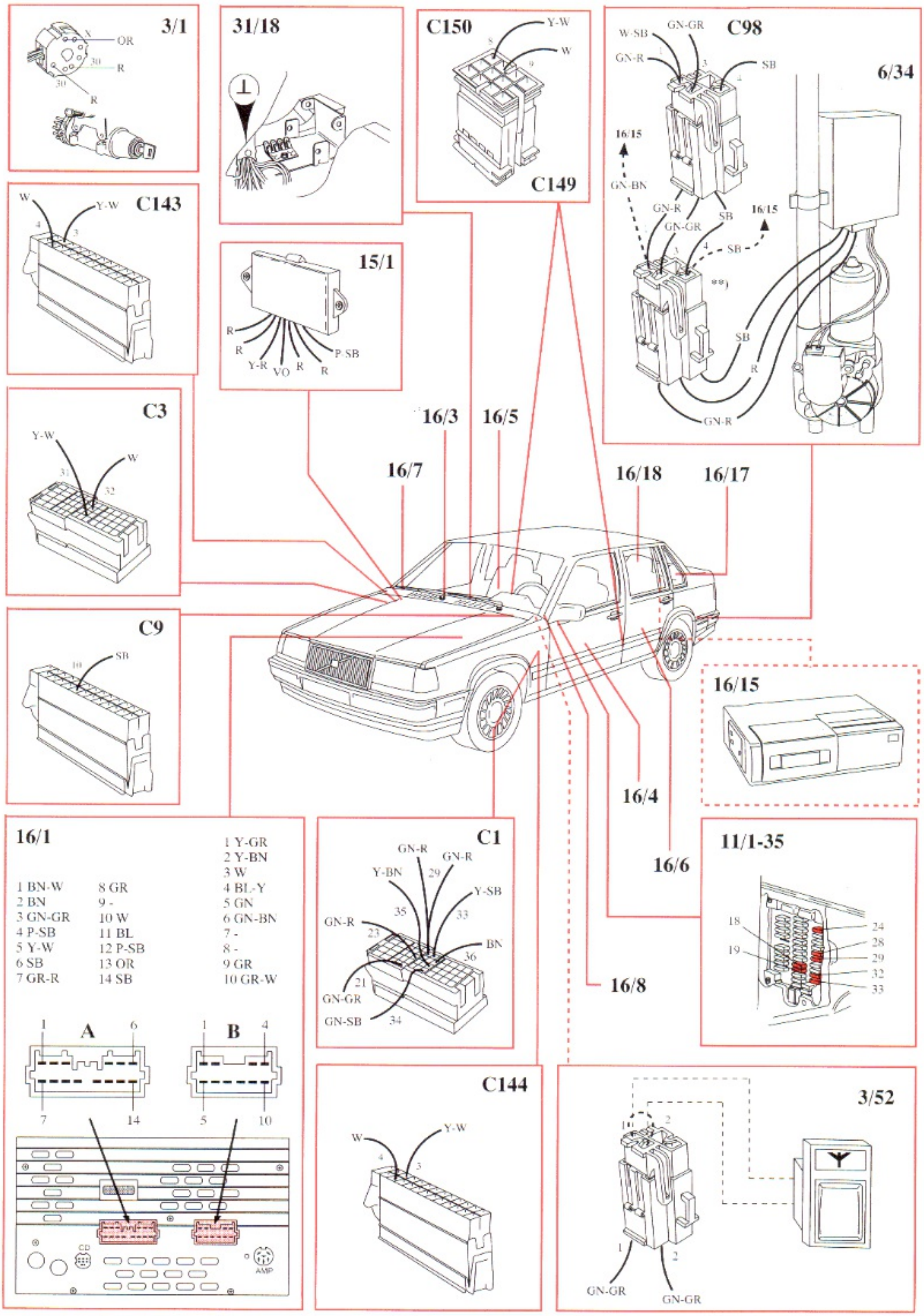
3/1
X
OR
30
R
30
R
31/18
C150
Y-W
W
C149
C98
6/34
W-SB
GN-GR
GN-R
SB
16/15
GN-BN
GN-R
GN-GR
SB
16/15
SB
**)
SB
R
GN-R
C143
W
Y-W
15/1
R
R
Y-R
VO
R
R
P-SB
C3
Y-W
W
31
32
C9
10
SB
16/3
16/5
16/7
16/18
16/17
16/15
16/4
16/6
16/8
16/1
1 Y-GR
2 Y-BN
3 W
4 BL-Y
5 GN
6 GN-BN
7 -
8 -
9 GR
10 GR-W
1 BN-W
2 BN
3 GN-GR
4 P-SB
5 Y-W
6 SB
7 GR-R
8 GR
9 -
10 W
11 BL
12 P-SB
13 OR
14 SB
A
B
1
6
7
14
1
4
5
10
CD
AMP
C1
GN-R
GN-R
Y-BN
29
Y-SB
35
33
GN-R
23
BN
36
21
GN-GR
GN-SB
34
11/1-35
18
19
24
28
29
32
33
C144
W
Y-W
4
3
3/52
1
2
1
2
GN-GR
GN-GR

Radio connections, 5-door (Radio with integrated amplifier)

*) Connector in radio compartment, 1-pin
**) Connector at power antenna, 4-pin (junction)
***) Not for USA/CDN

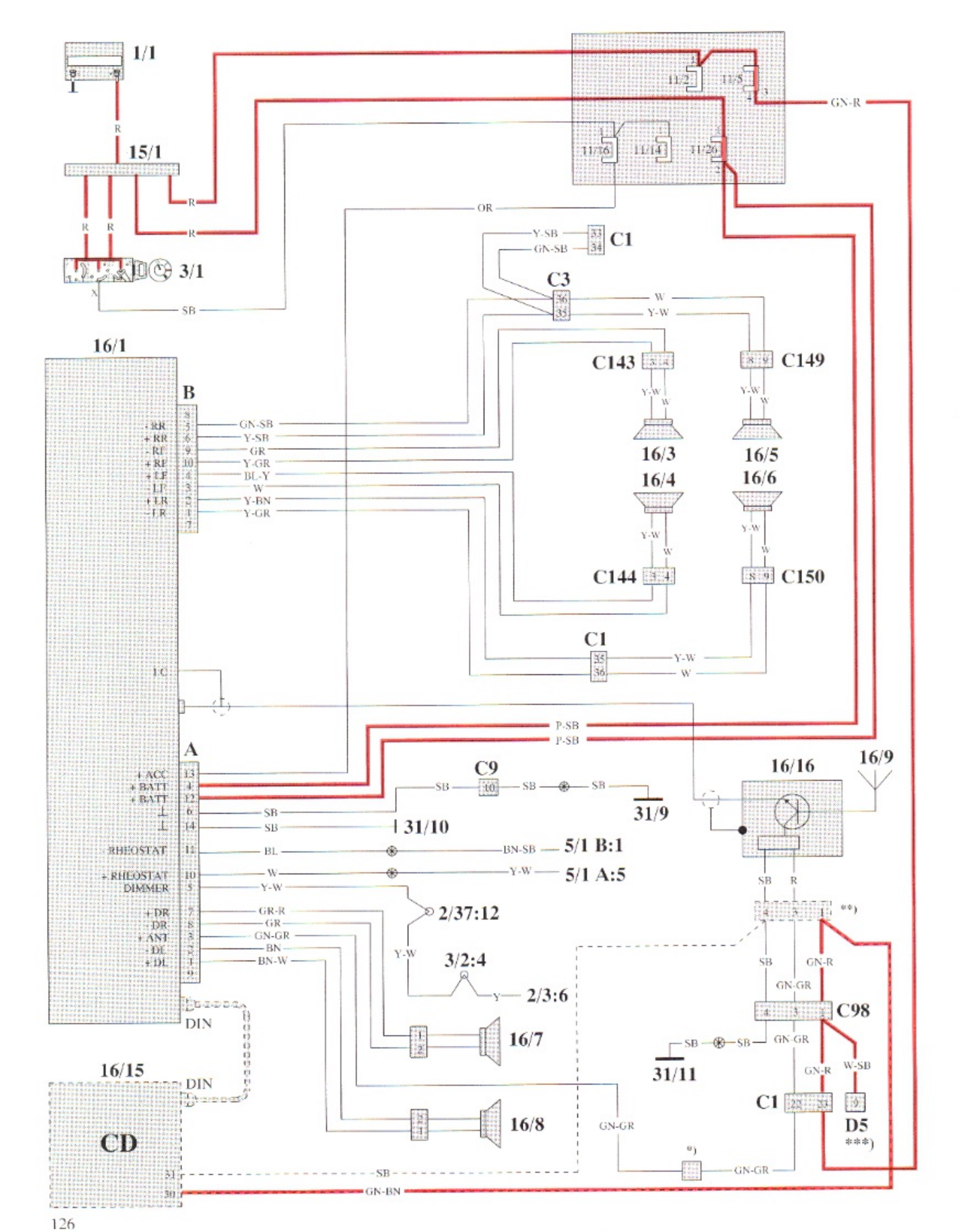

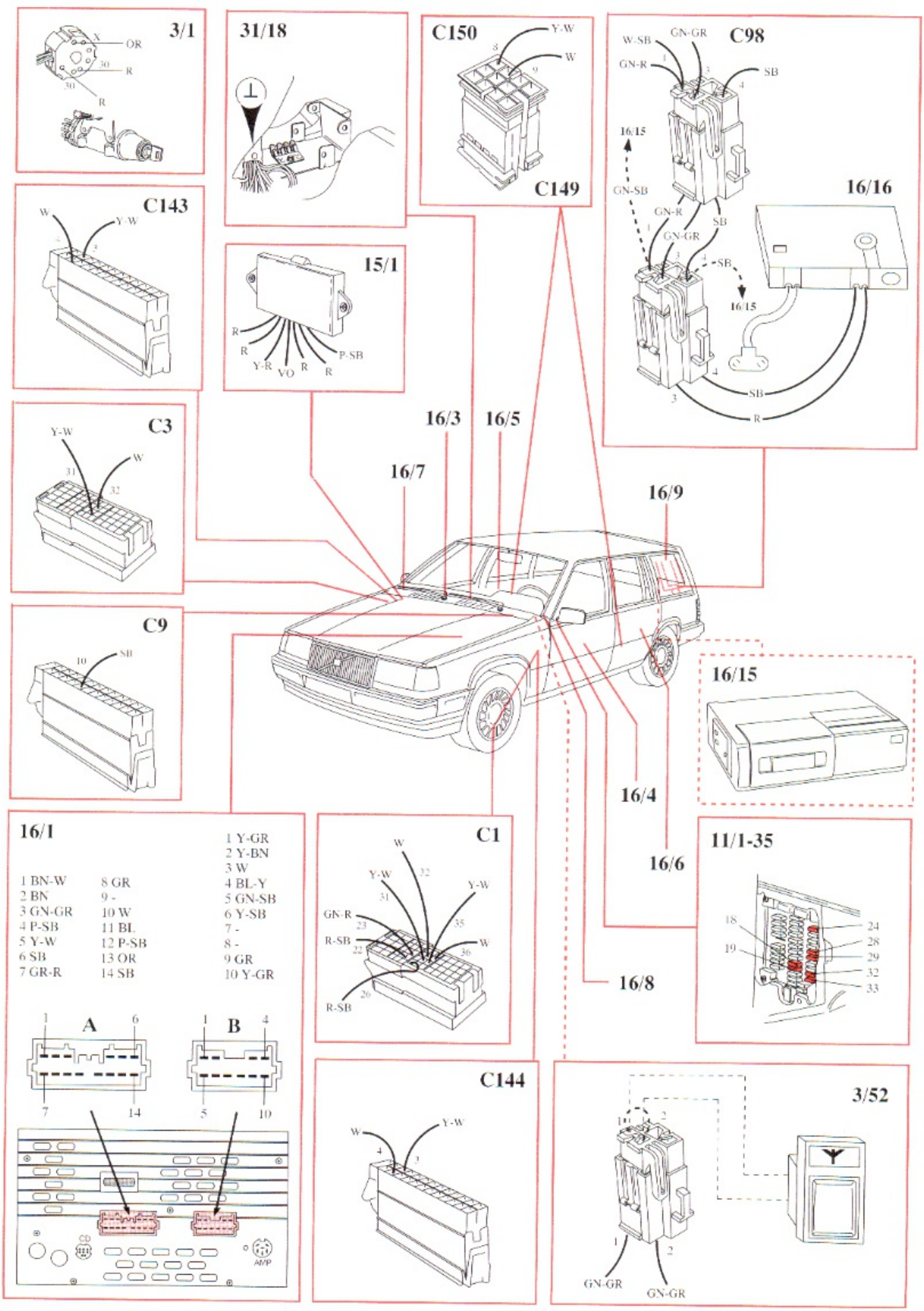
3/1
X
OR
30
R
30
R
31/18
C150
Y-W
8
W
9
C149
C98
W-SB
GN-GR
GN-R
1
3
SB
4
16/15
GN-SB
GN-R
SB
GN-GR
1
3
4
SB
16/15
16/16
4
3
SB
R
C143
W
Y-W
4
3
15/1
R
R
Y-R
VO
R
R
P-SB
C3
Y-W
W
31
32
C9
10
SB
16/3
16/5
16/7
16/9
16/15
16/4
16/6
16/8
16/1
1 Y-GR
2 Y-BN
3 W
4 BL-Y
5 GN-SB
6 Y-SB
7 -
8 -
9 GR
10 Y-GR
1 BN-W
2 BN
3 GN-GR
4 P-SB
5 Y-W
6 SB
7 GR-R
8 GR
9 -
10 W
11 BL
12 P-SB
13 OR
14 SB
A
1
6
7
14
B
1
4
5
10
CD
AM/P
C1
W
Y-W
32
Y-W
31
35
GN-R
23
R-SB
22
W
36
26
R-SB
11/1-35
18
19
24
28
29
32
33
C144
W
Y-W
4
3
3/52
1
2
1
2
GN-GR
GN-GR

M 46 Overdrive

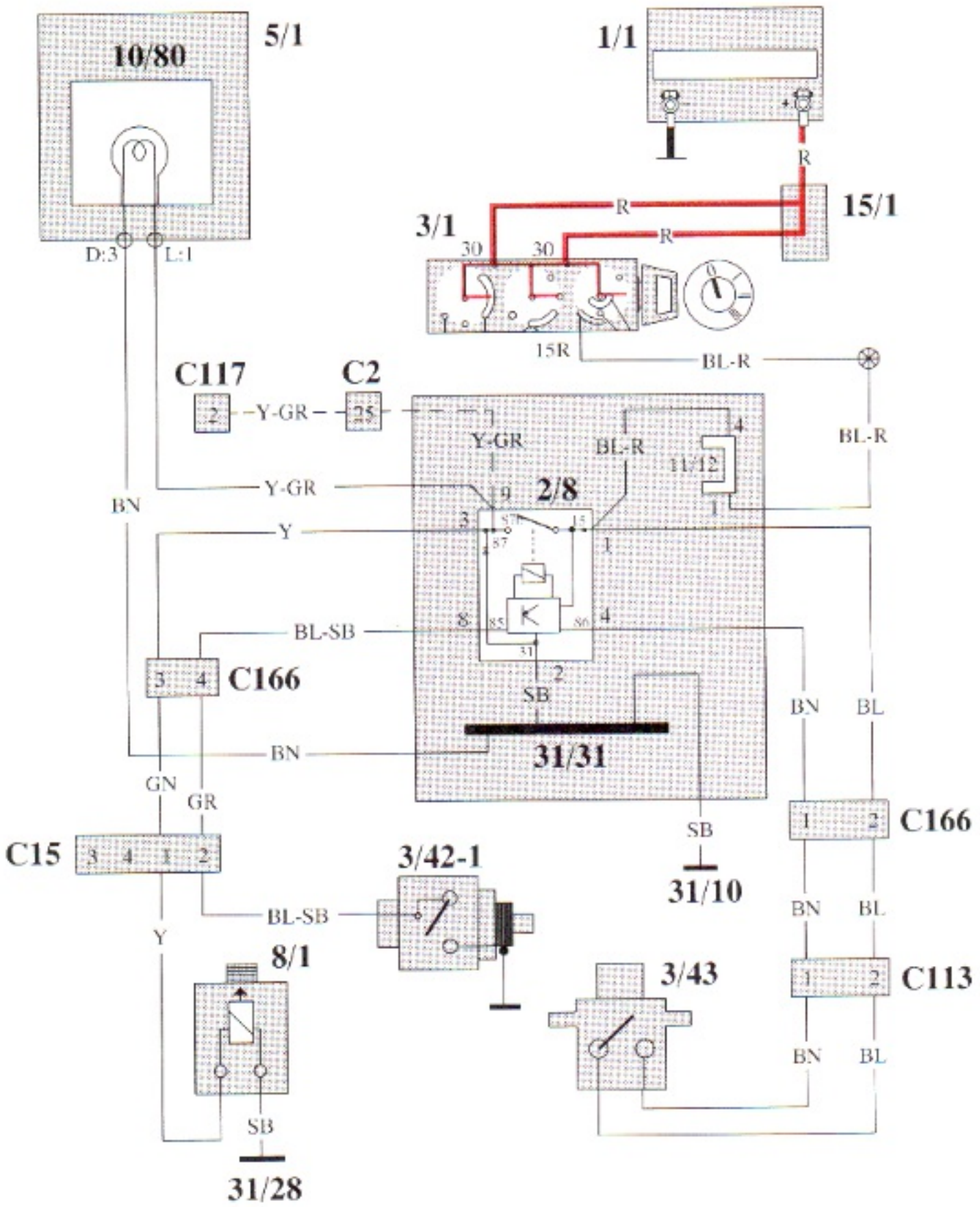

Engaging overdrive,
Gear lever in 4th gear

Downshift from 4th gear,
overdrive disengages
automatically

Disengaging overdrive,
gear lever in 4th gear

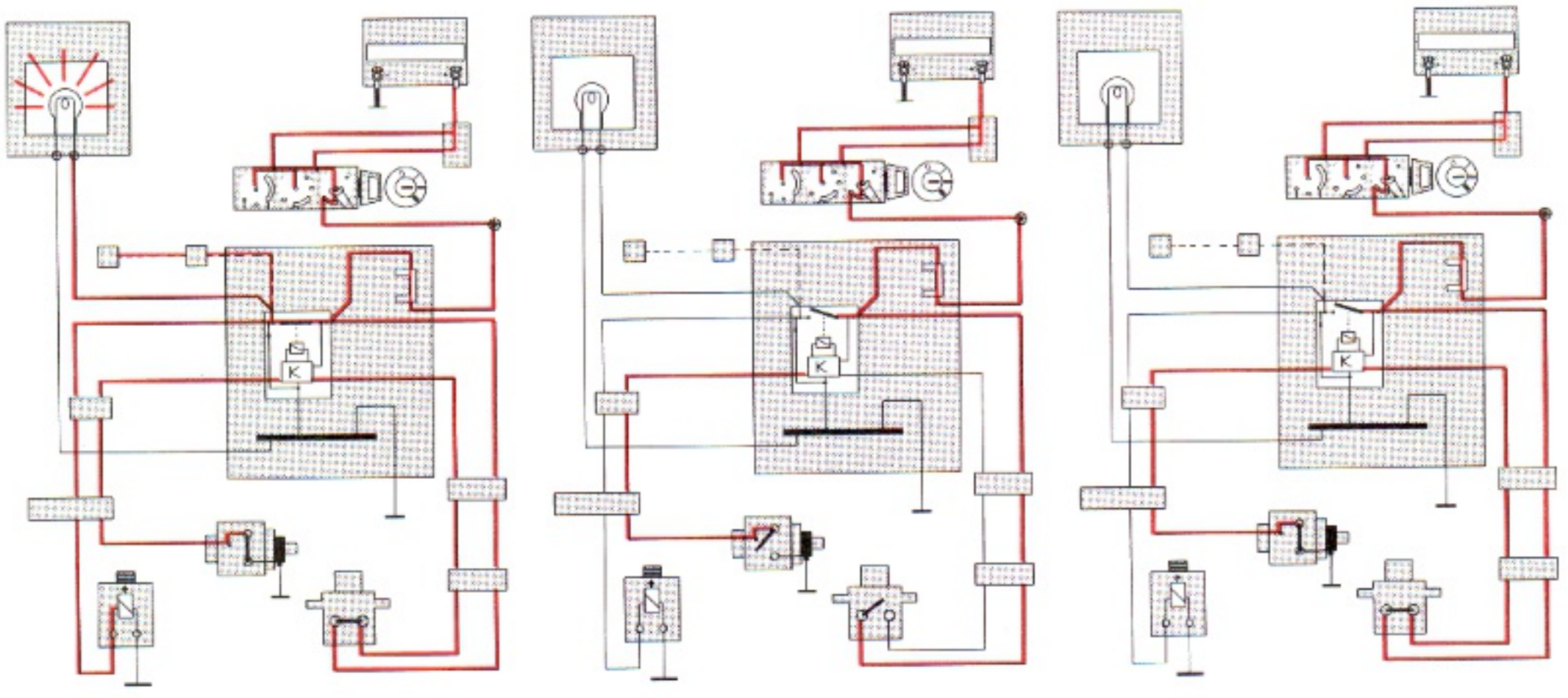

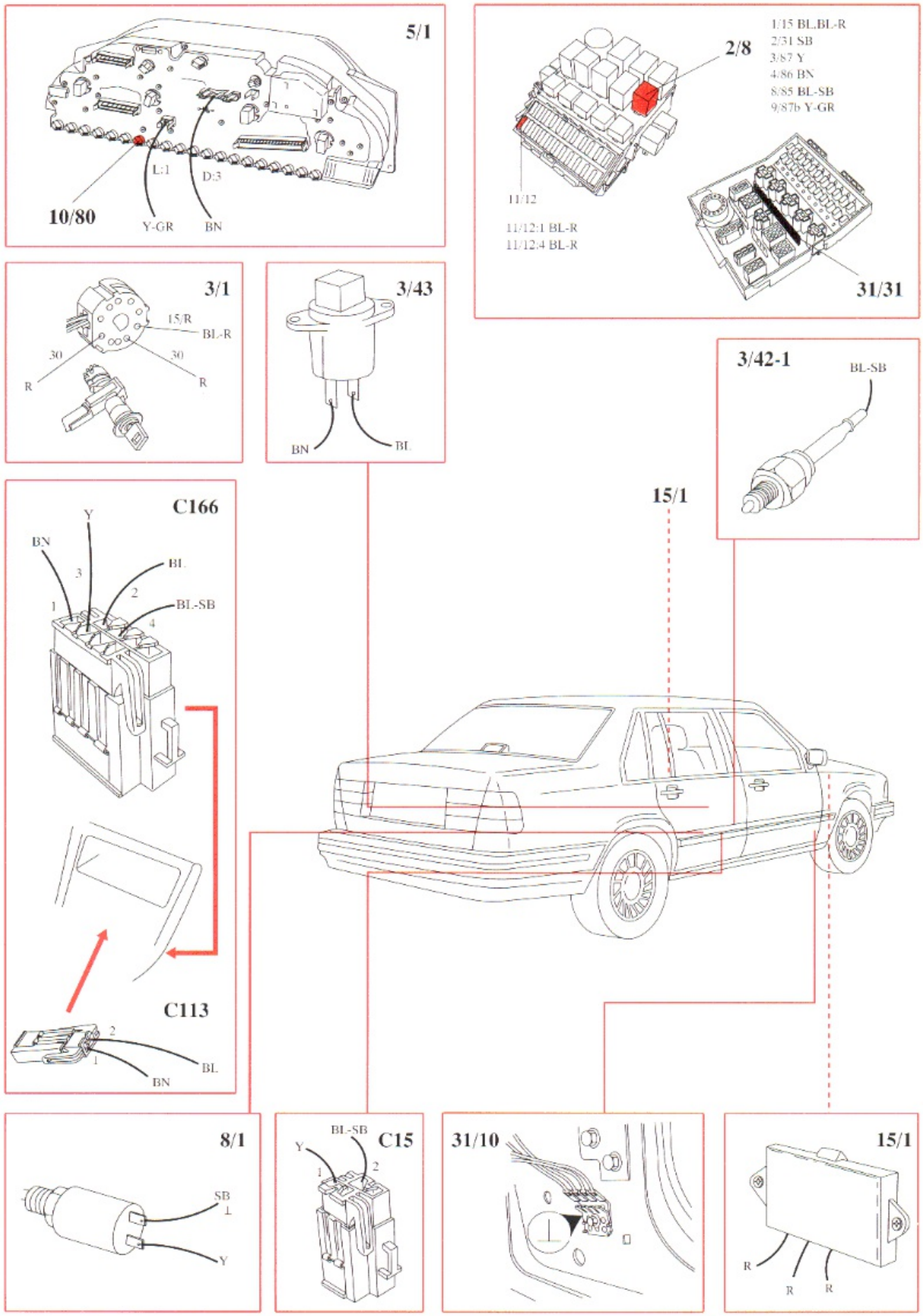
5/1
L:1
D:3
10/80
Y-GR
BN
2/8
1/15 BL,BL-R
2/31 SB
3/87 Y
4/86 BN
8/85 BL-SB
9/87b Y-GR
11/12
11/12:1 BL-R
11/12:4 BL-R
31/31
3/1
15/R
BL-R
30
30
R
R
3/43
BN
BL
3/42-1
BL-SB
15/1
C166
Y
BN
3
BL
2
1
BL-SB
4
C113
2
1
BL
BN
8/1
SB
Y
C15
BL-SB
Y
1
2
31/10
15/1
R
R
R

AW 70/71/72 Overdrive with kickdown inhibitor AW 71/72

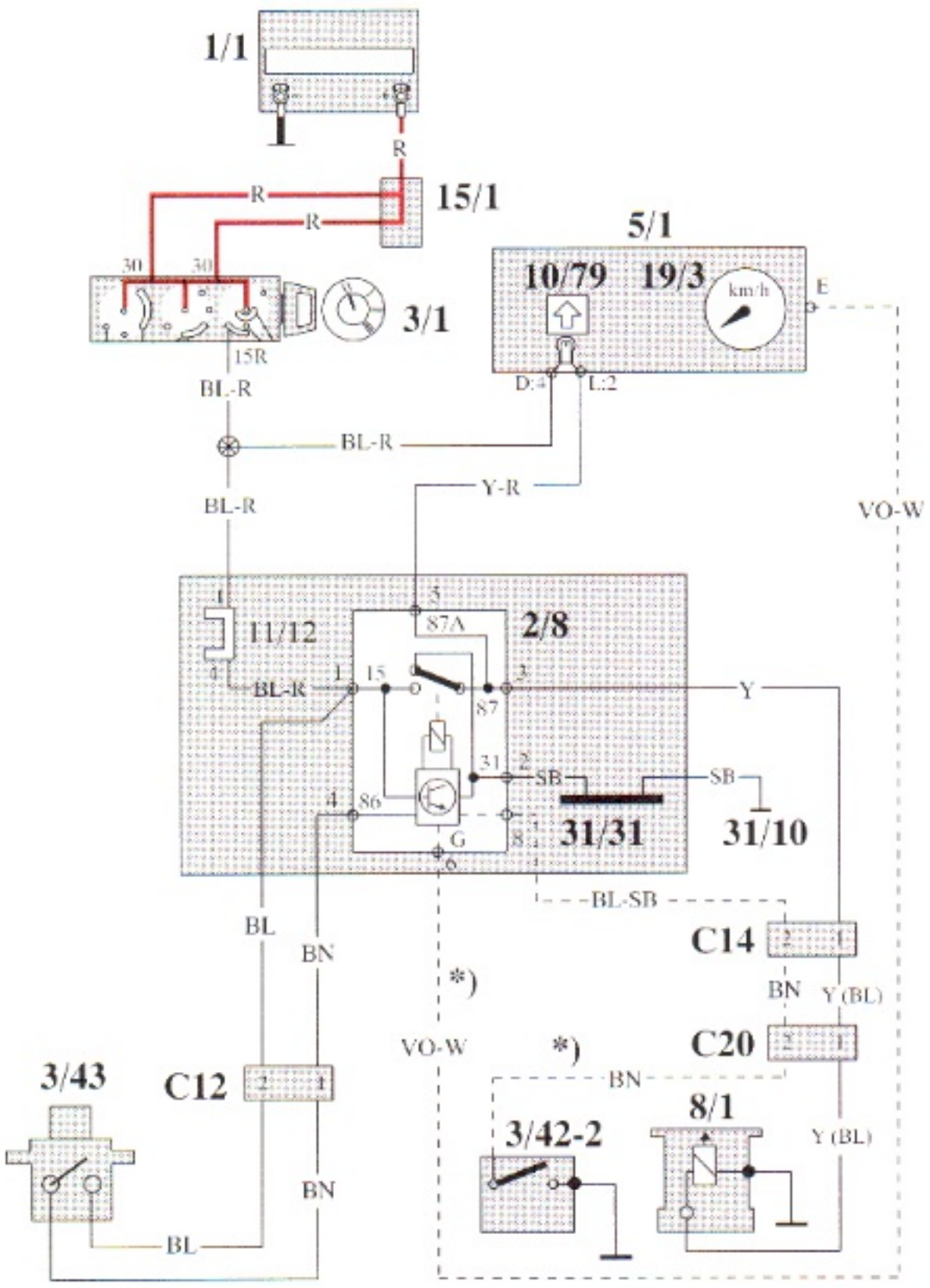

* AW 71/72 certain markets

Overdrive disengaged
Indicator lamp ON

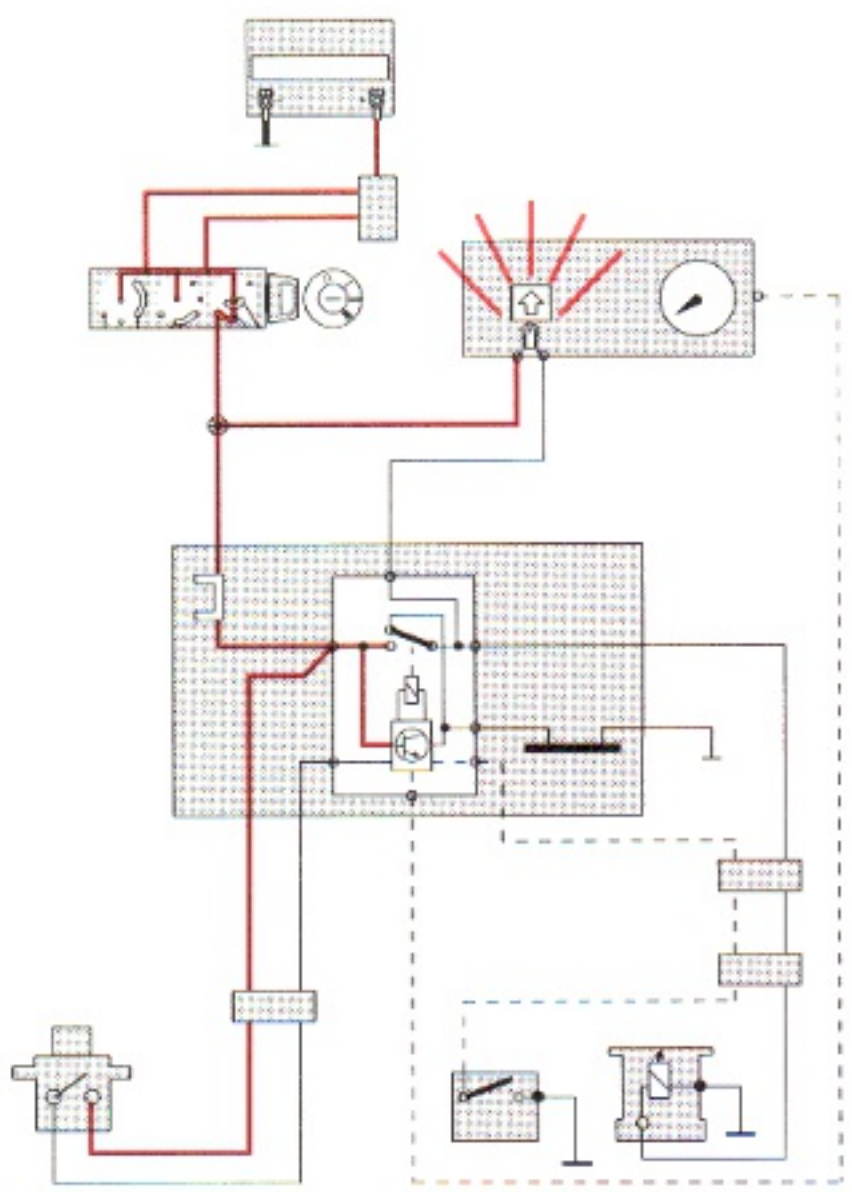

Overdrive engaged
Indicator lamp OFF

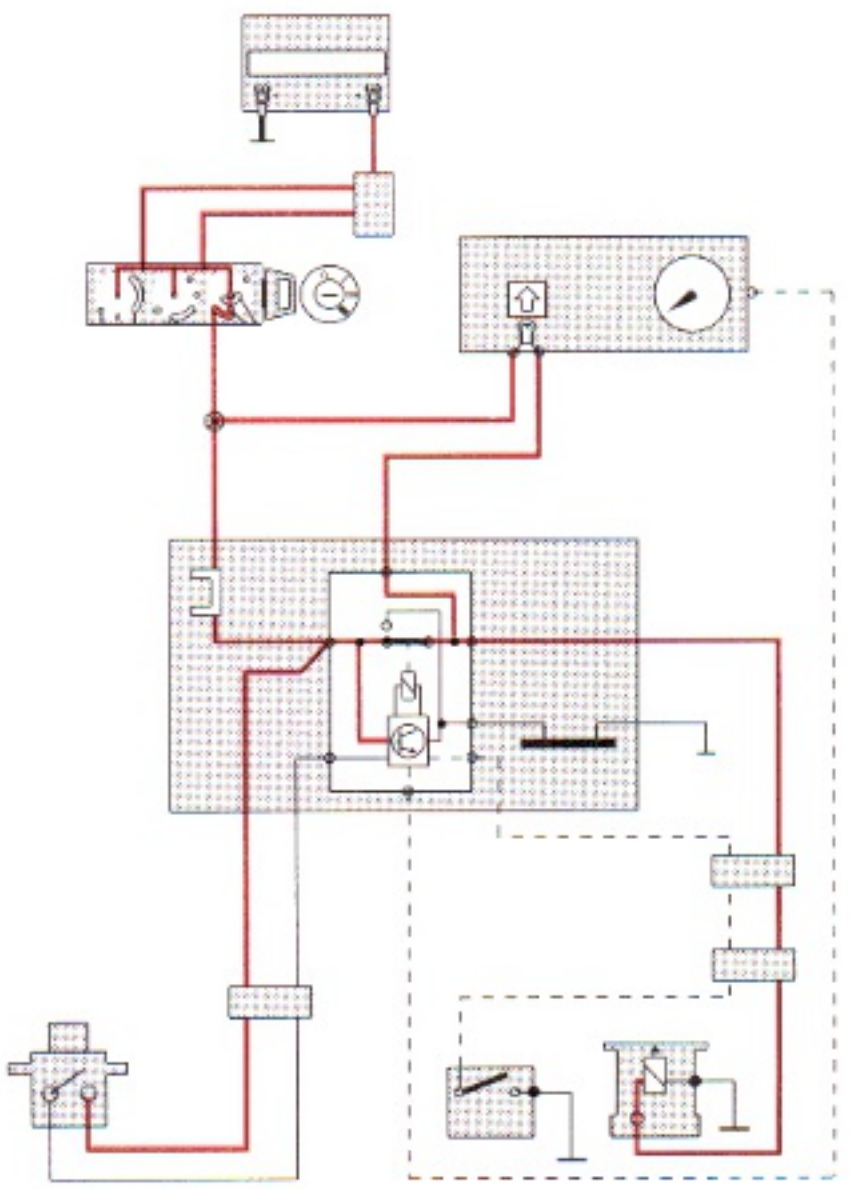

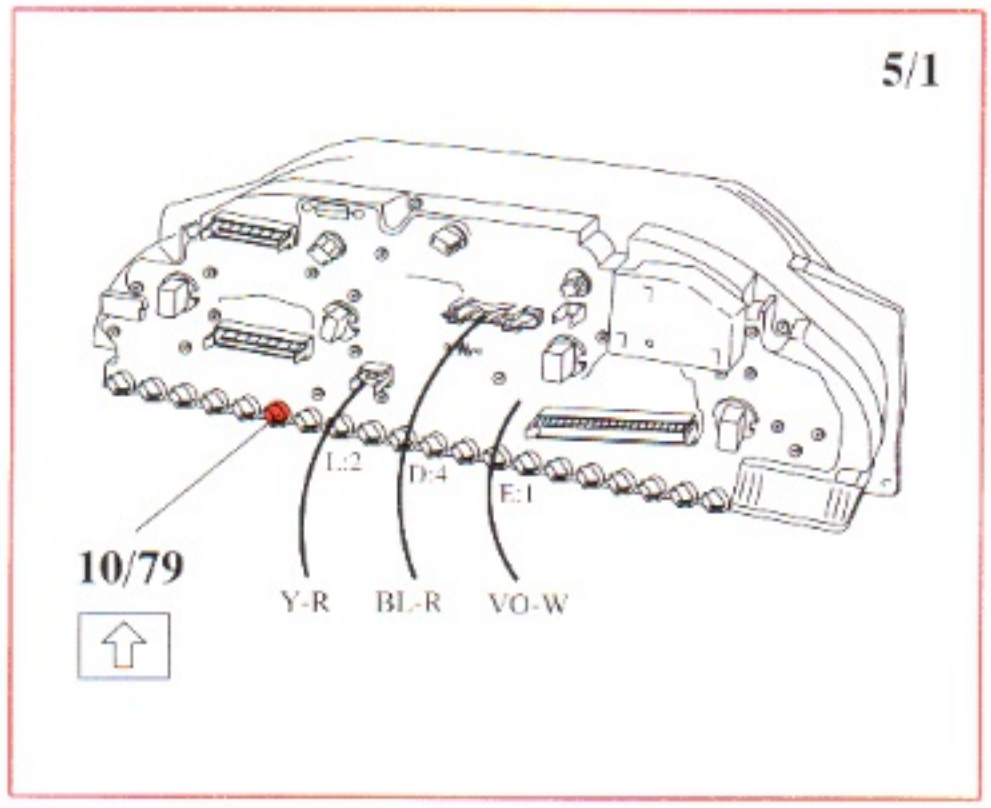
5/1
10/79
L:2
D:4
E:1
Y-R
BL-R
VO-W

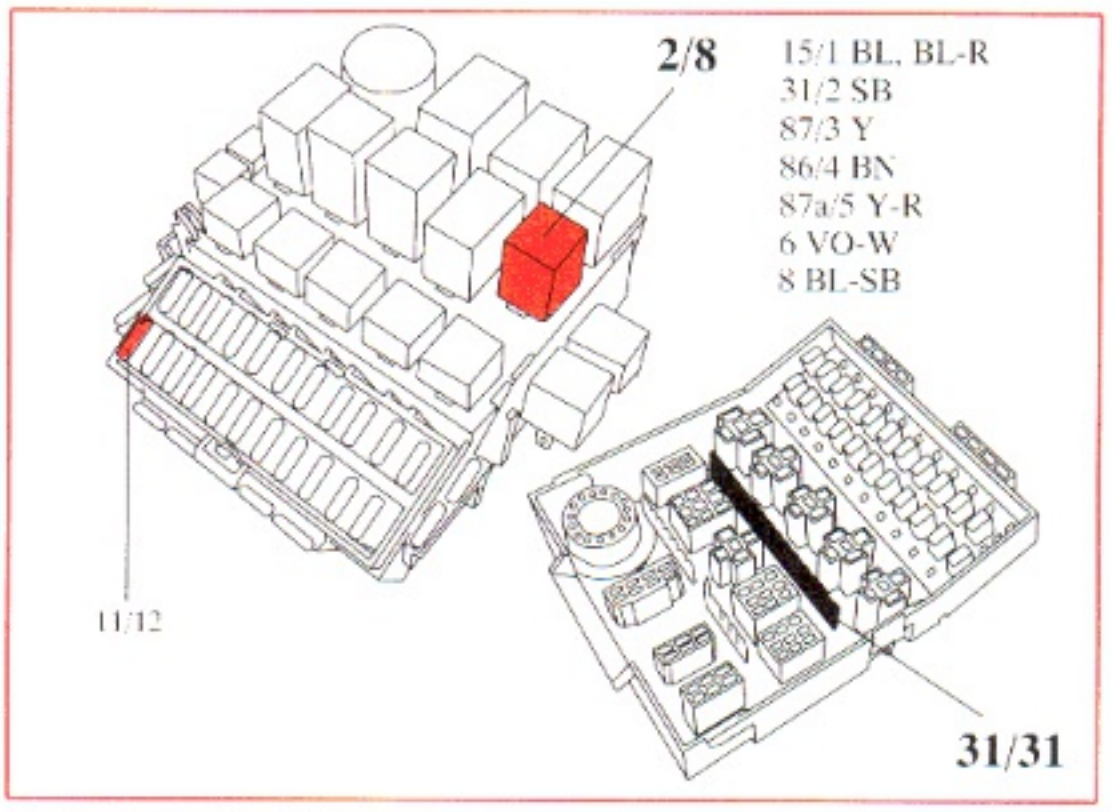
2/8
15/1 BL, BL-R
31/2 SB
87/3 Y
86/4 BN
87a/5 Y-R
6 VO-W
8 BL-SB
11/12
31/31

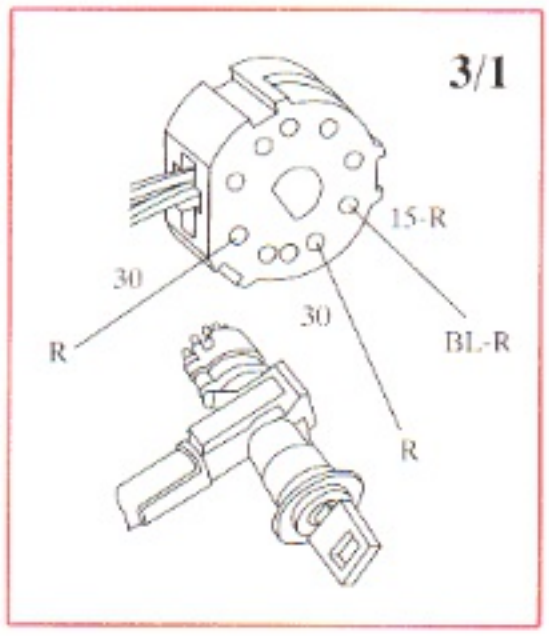
3/1
15-R
30
30
BL-R
R
R

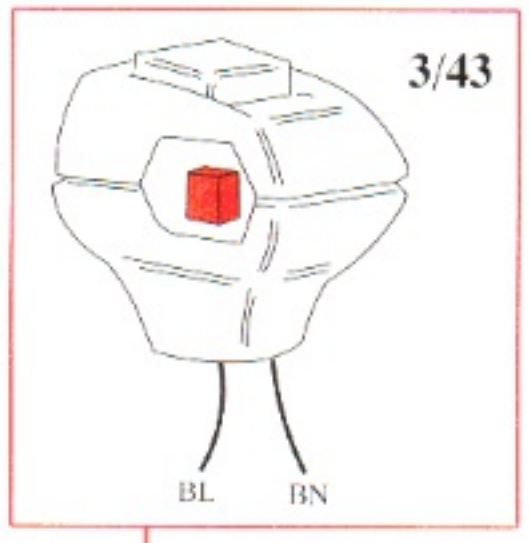
3/43
BL
BN

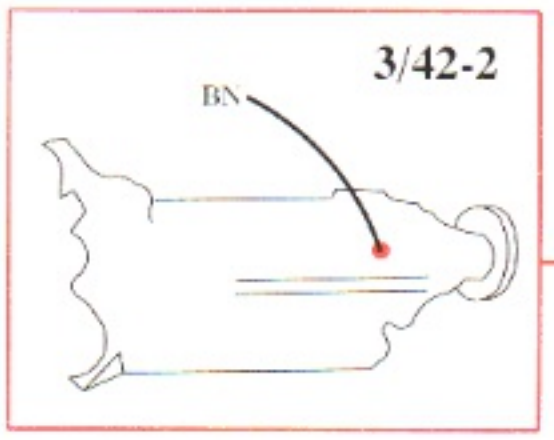
3/42-2
BN

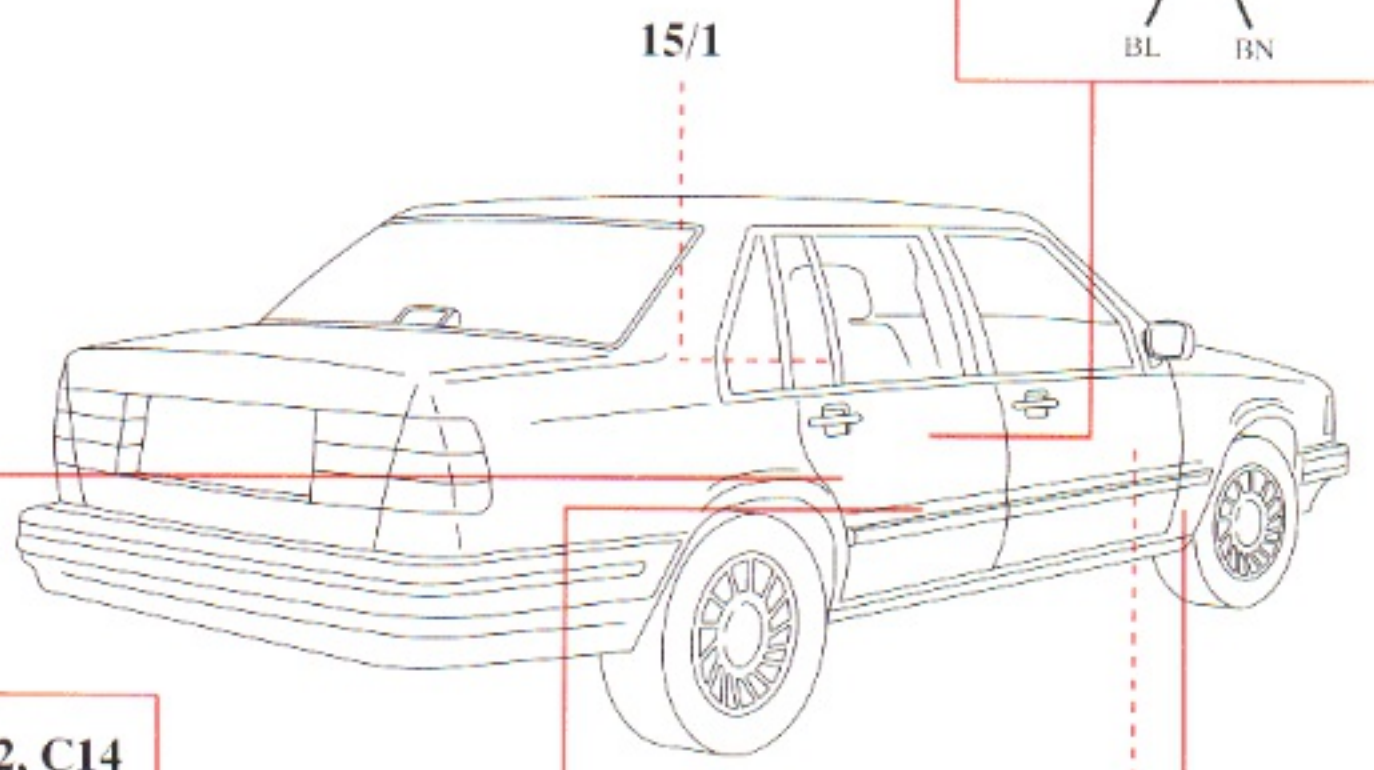
15/1

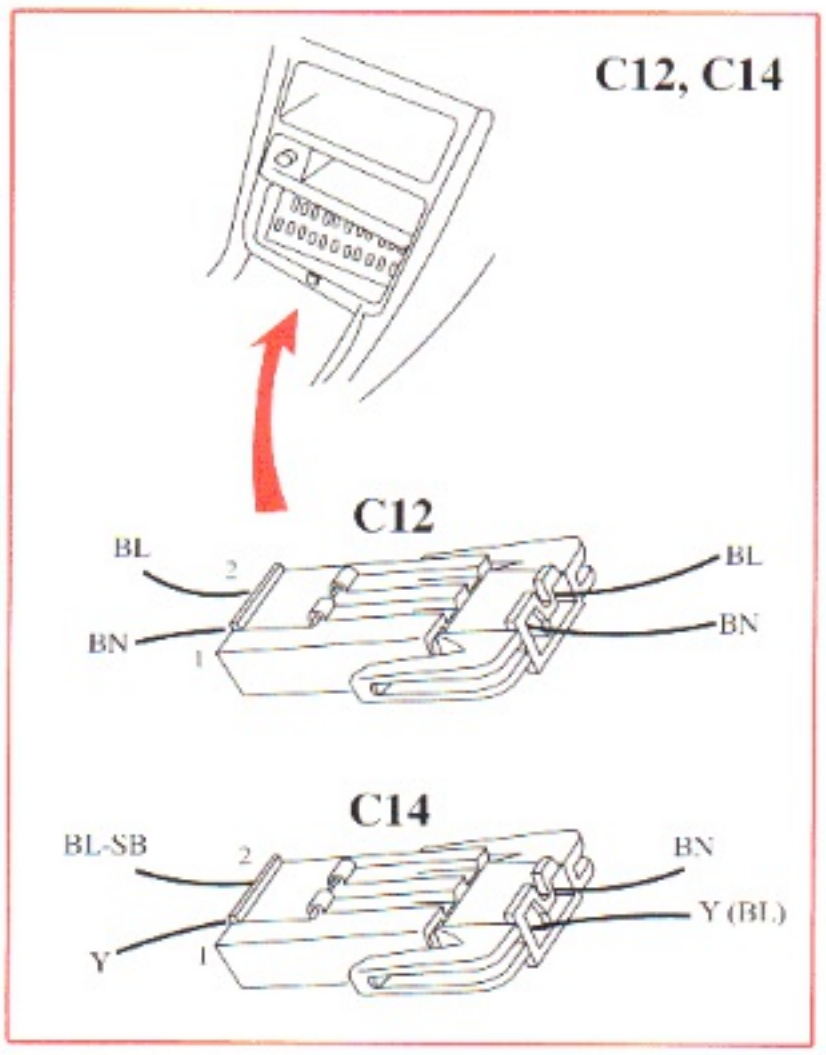
C12, C14
C12
BL
2
BN
1
BL
BN
C14
BL-SB
2
Y
1
BN
Y (BL)

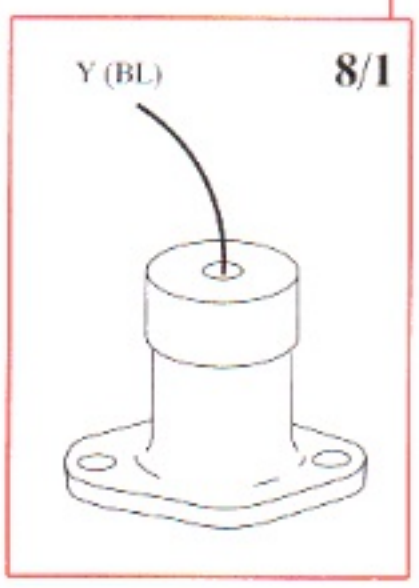
Y (BL)
8/1

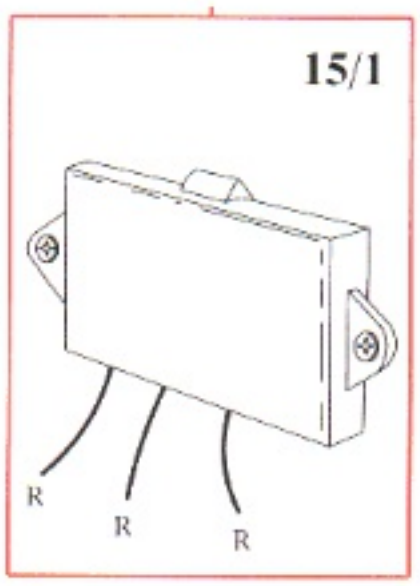
15/1
R
R
R

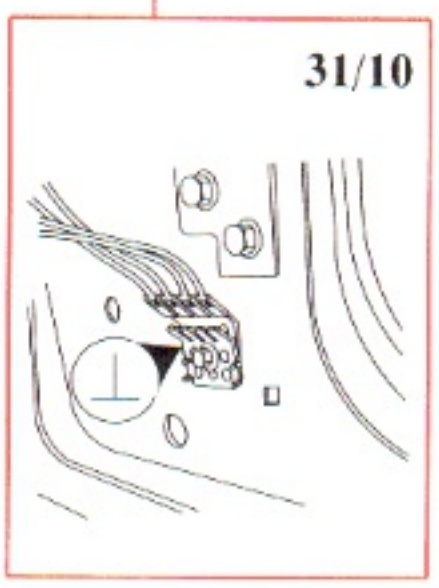
31/10

P-shift lock, automatic transmission

1/1
15/1
3/1
11/10
11/9
11/4
11/2
4/16:25
7/75:9
C2
C166
C155
C7
C51
3/40
3/9
6/25
2/45
8/36
C139
31/31
31/10
4/3:2
4/3:7

Ignition on
Brake pedal pressed
Shift lock released

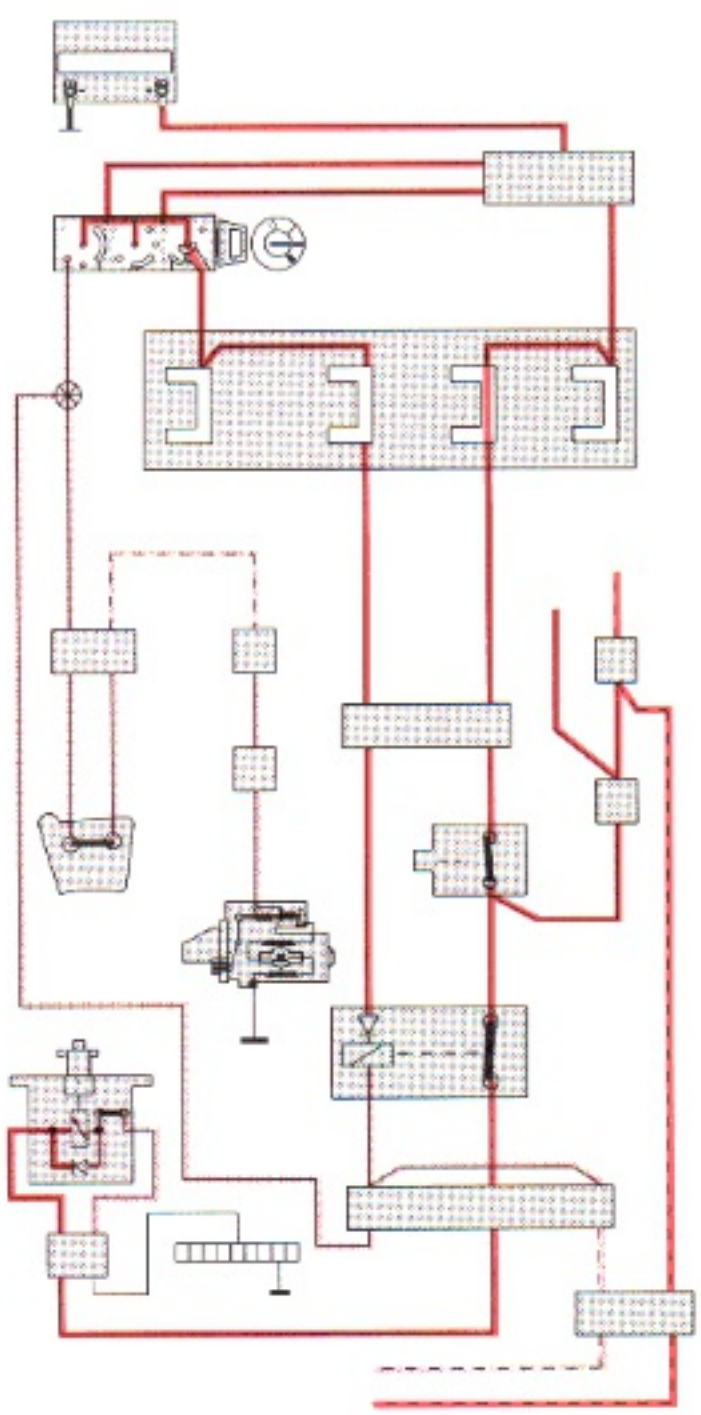

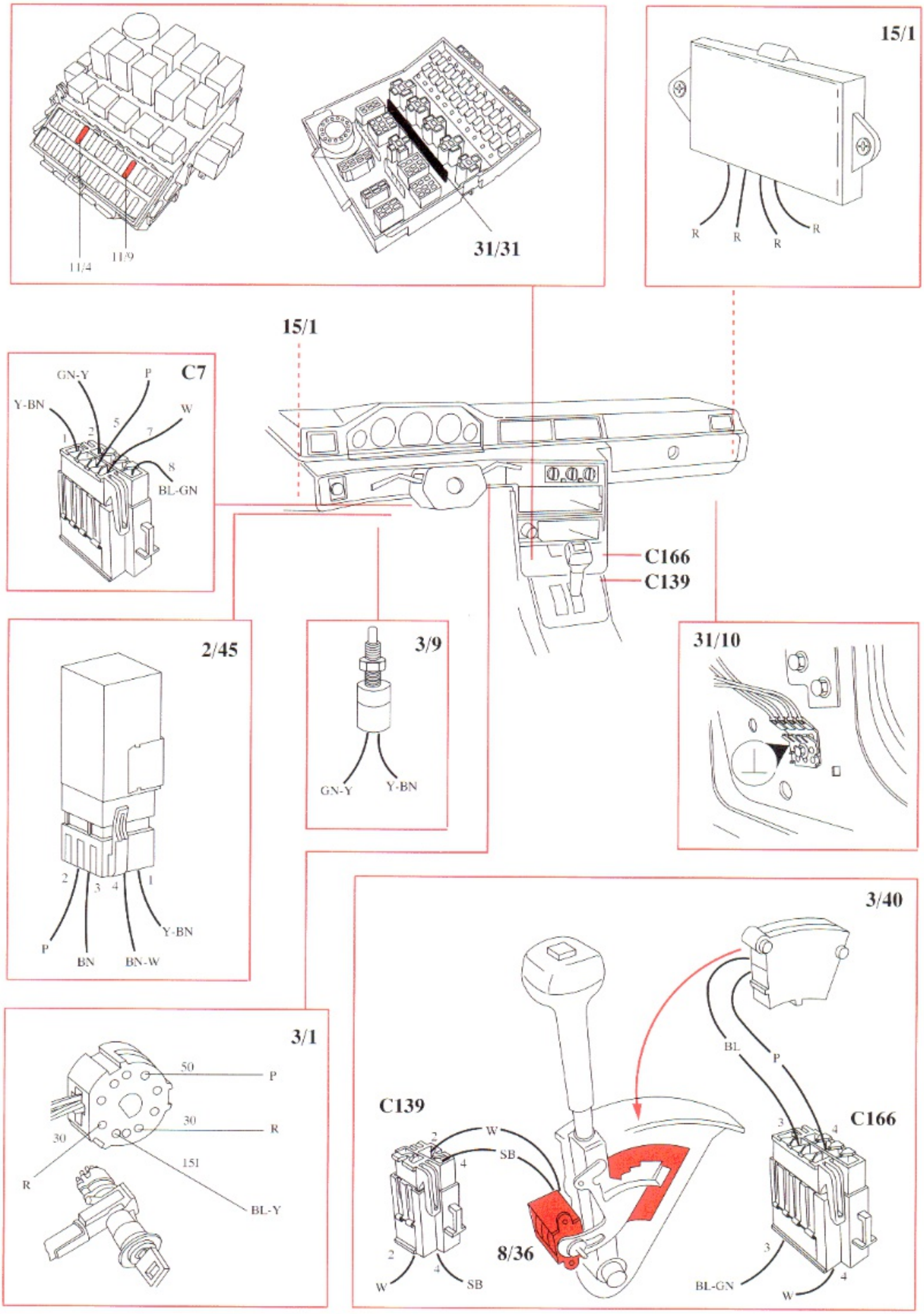
11/4
11/9
31/31
15/1
R
R
R
R
15/1
C7
GN-Y
P
Y-BN
W
1
2
5
7
8
BL-GN
C166
C139
2/45
3/9
GN-Y
Y-BN
31/10
2
3
4
1
P
BN
BN-W
Y-BN
3/40
3/1
50
P
30
R
30
R
151
BL-Y
C139
W
SB
2
4
2
4
W
SB
8/36
BL
P
C166
3
4
3
4
BL-GN
W

ABS Brake system

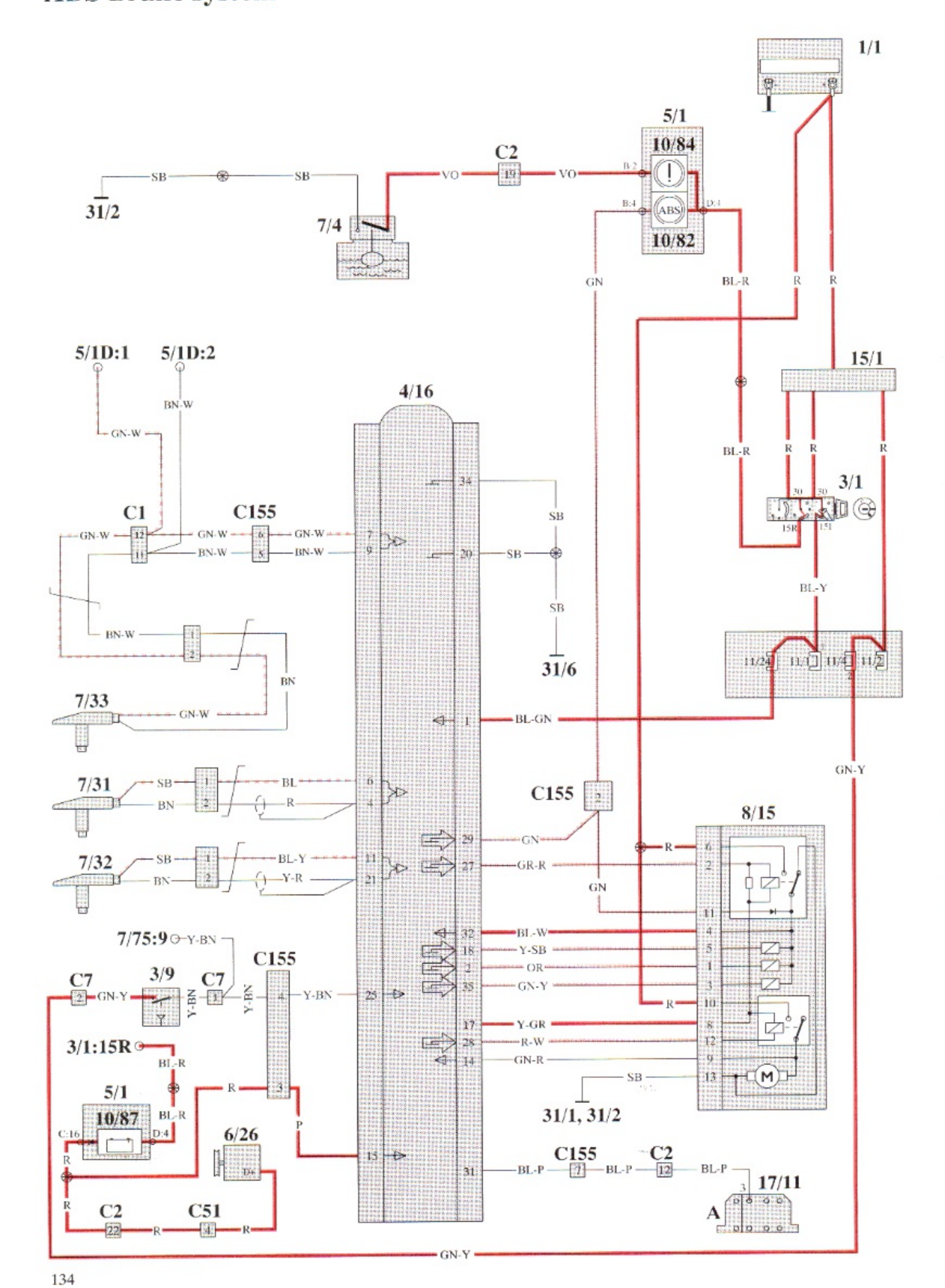

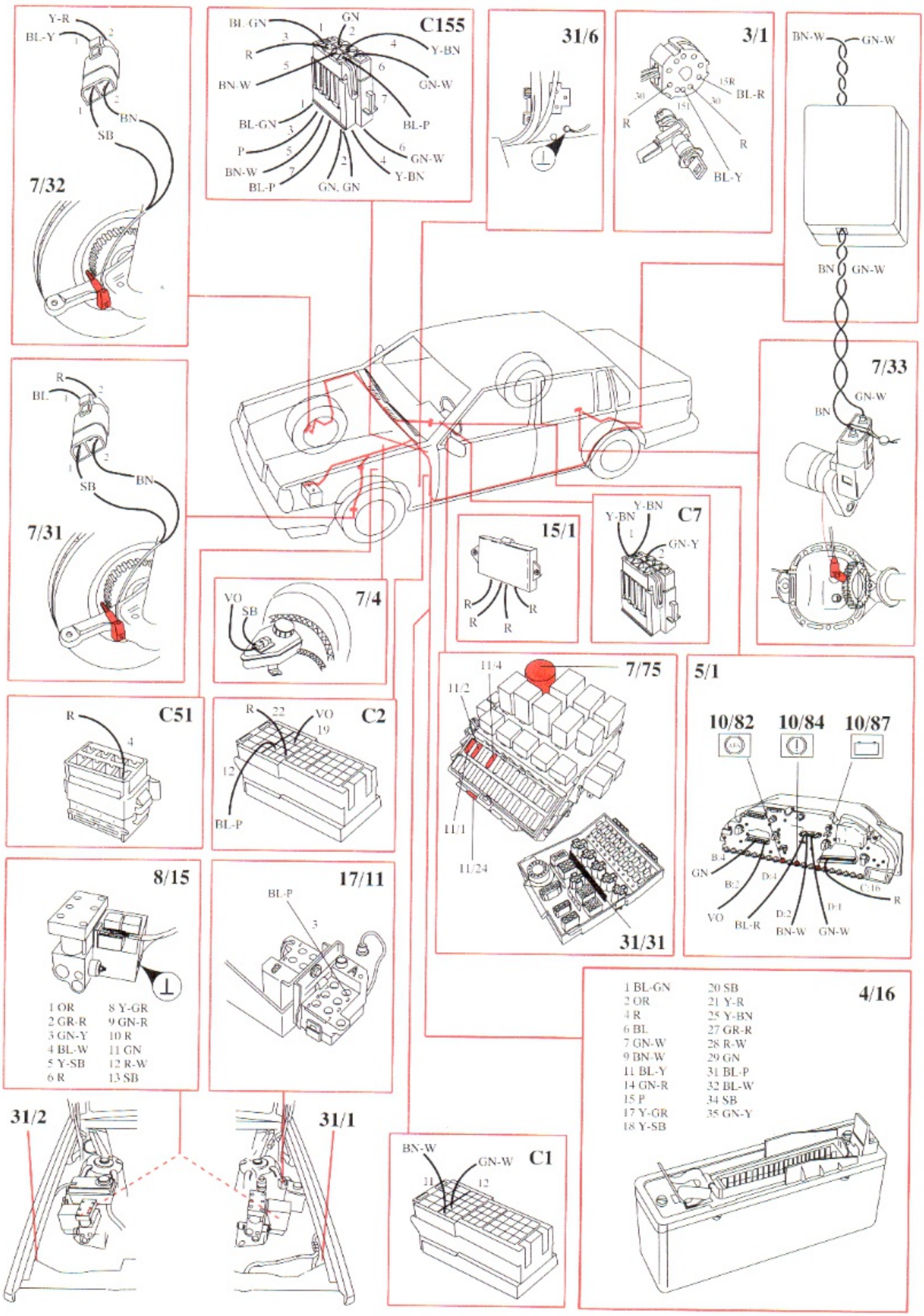
7/32
Y-R
BL-Y
BN
SB
C155
BL-GN
GN
R
Y-BN
BN-W
GN-W
BL-P
P
GN, GN
31/6
3/1
15R
BL-R
30
15I
R
BL-Y
BN-W
GN-W
BN
7/33
7/31
BL
7/4
VO
SB
15/1
C7
GN-Y
7/75
11/4
11/2
11/1
11/24
31/31
5/1
10/82
10/84
10/87
B:4
GN
B:2
D:4
C:16
VO
BL-R
D:2
D:1
BN-W
C51
C2
22
19
12
BL-P
8/15
1 OR
2 GR-R
3 GN-Y
4 BL-W
5 Y-SB
6 R
8 Y-GR
9 GN-R
10 R
11 GN
12 R-W
13 SB
17/11
3
4/16
1 BL-GN
2 OR
4 R
6 BL
7 GN-W
9 BN-W
11 BL-Y
14 GN-R
15 P
17 Y-GR
18 Y-SB
20 SB
21 Y-R
25 Y-BN
27 GR-R
28 R-W
29 GN
31 BL-P
32 BL-W
34 SB
35 GN-Y
31/2
31/1
C1

Power window lifts

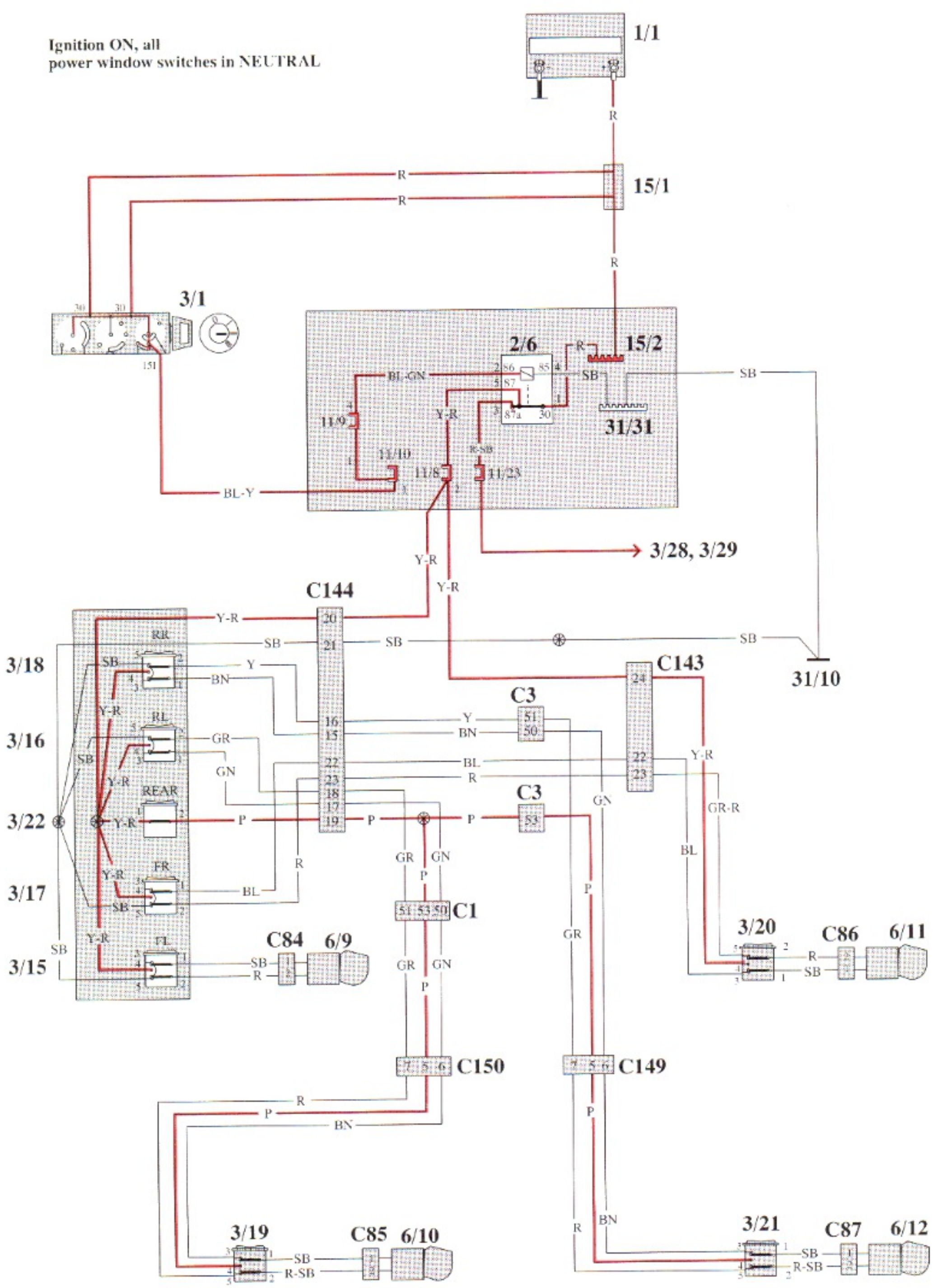

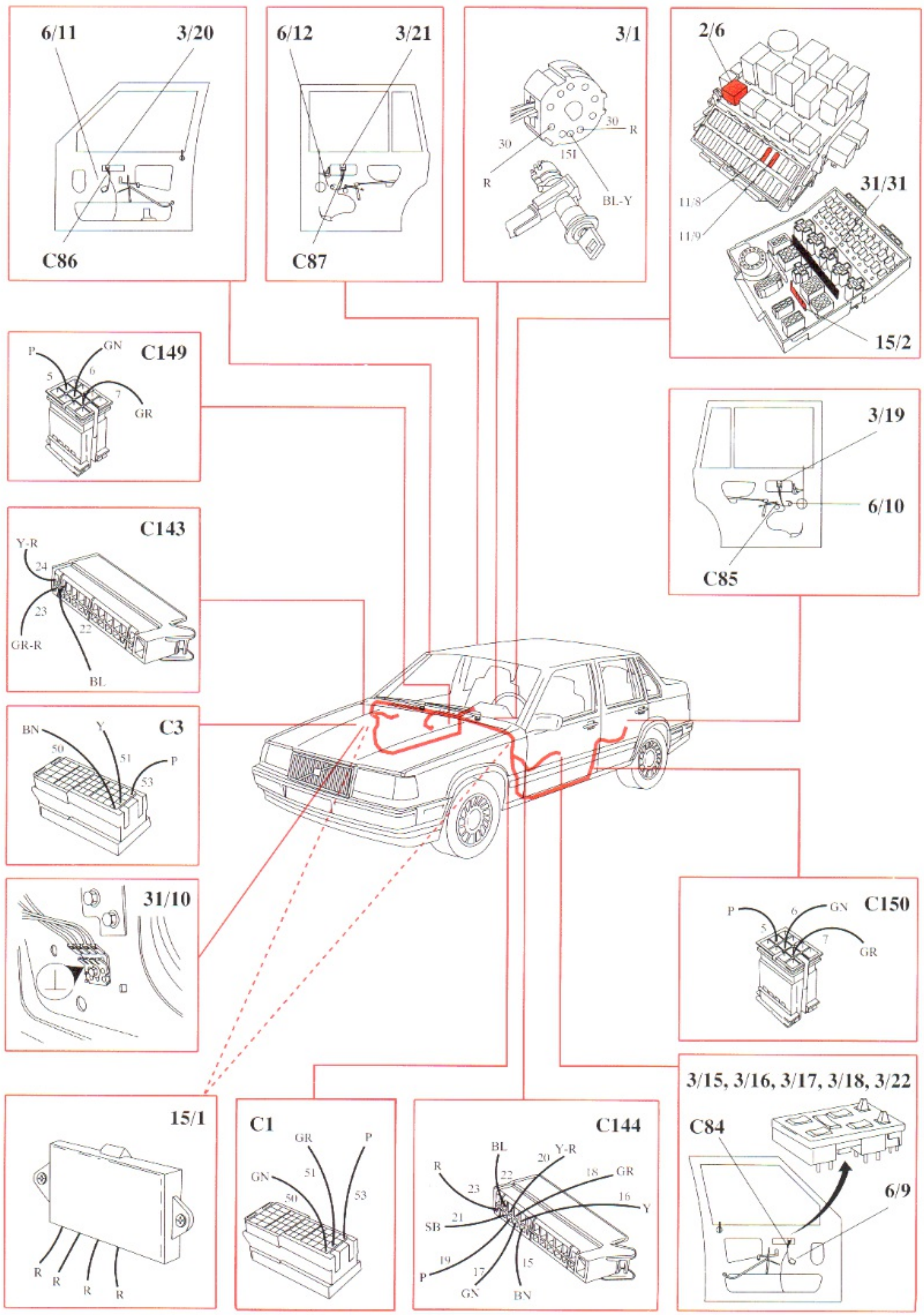
6/11
3/20
C86
6/12
3/21
C87
3/1
30
R
30
15I
R
BL-Y
2/6
11/8
11/9
31/31
15/2
C149
P
GN
5
6
7
GR
3/19
6/10
C85
C143
Y-R
24
23
22
GR-R
BL
C3
BN
Y
50
51
P
53
31/10
C150
P
6
GN
5
7
GR
15/1
R
R
R
R
C1
GR
P
GN
51
50
53
C144
BL
20
Y-R
R
22
18
GR
23
16
Y
21
SB
19
P
17
15
GN
BN
3/15, 3/16, 3/17, 3/18, 3/22
C84
6/9

Central locking

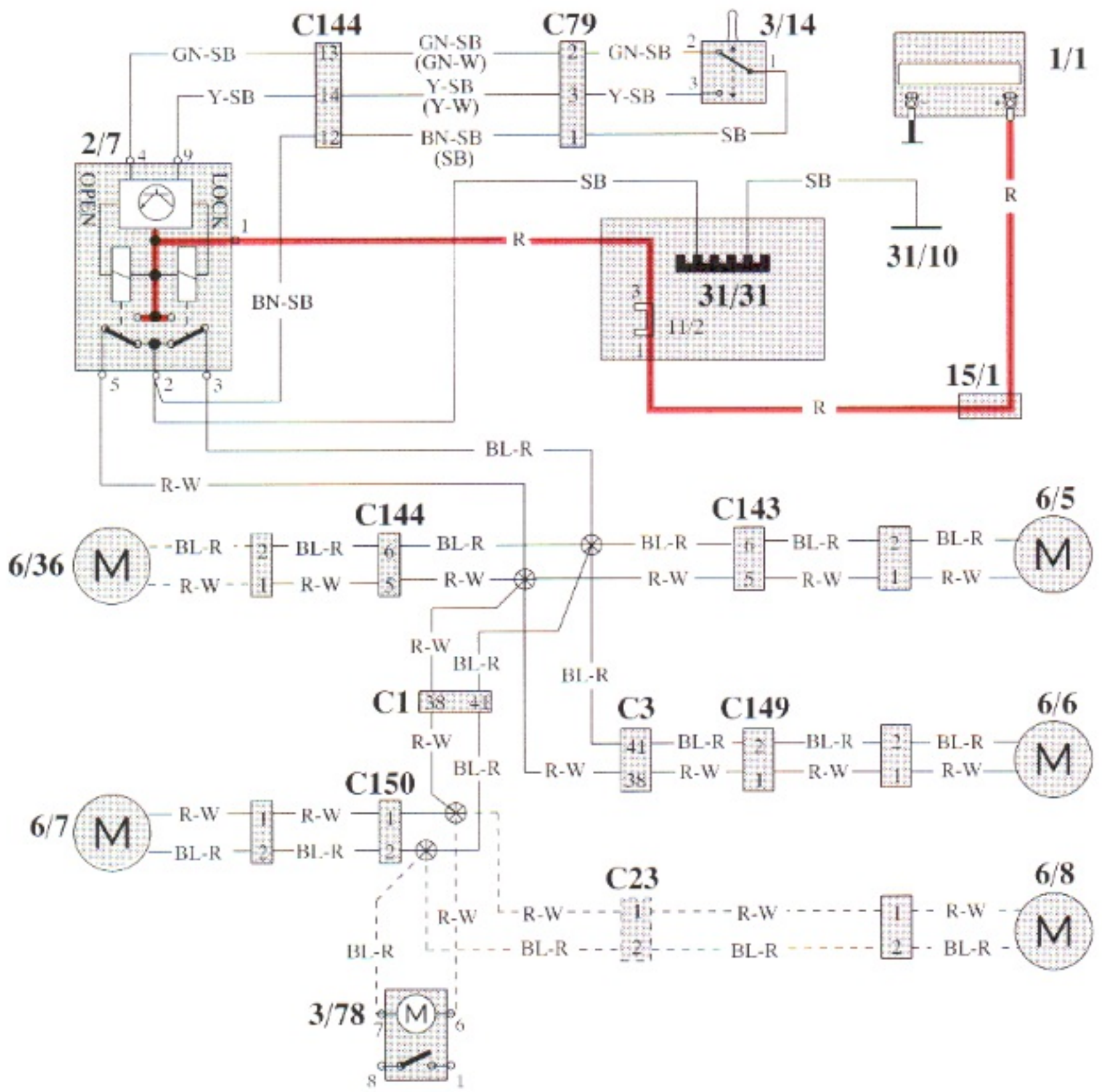

Unlocking with key

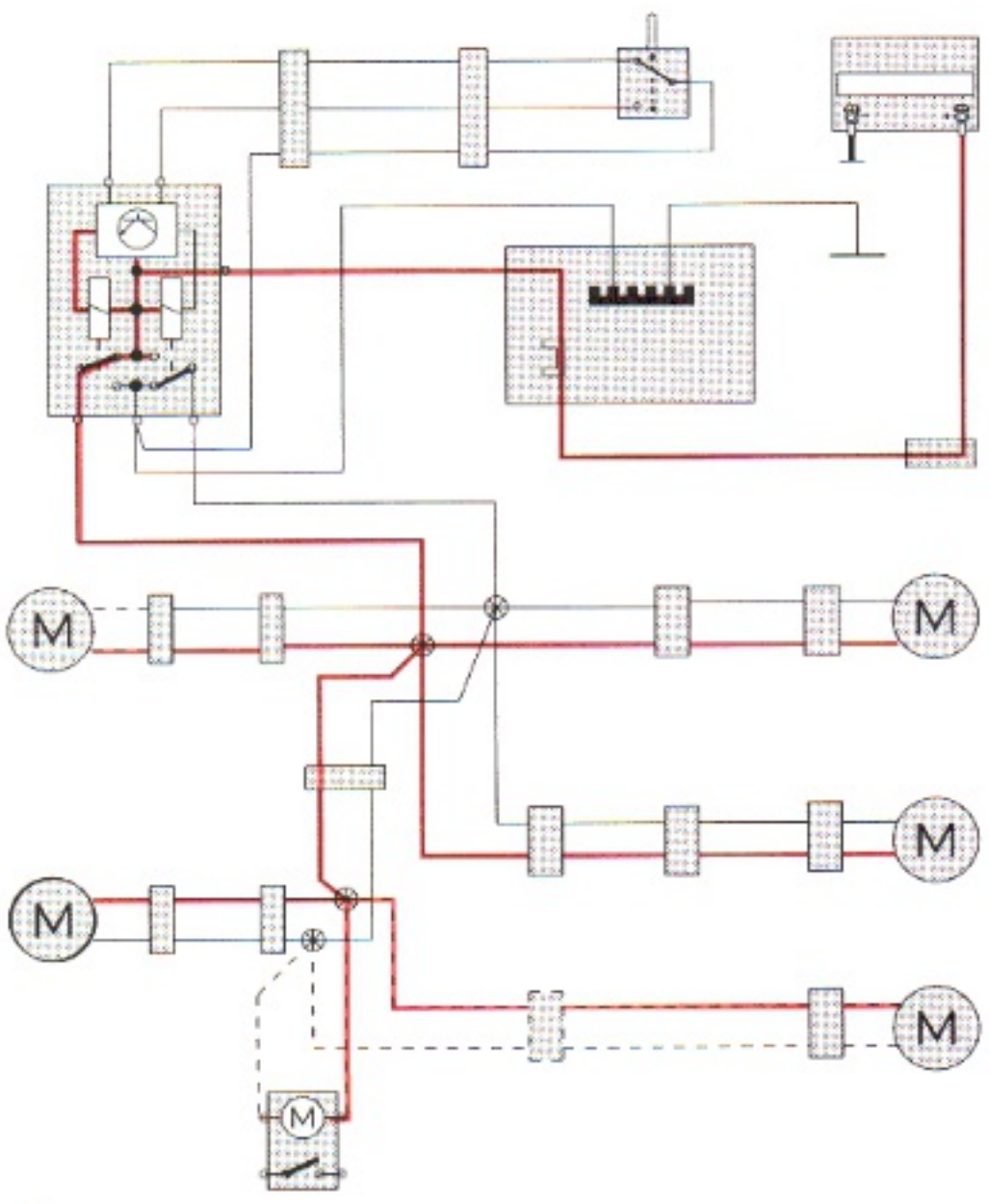

Locking with key

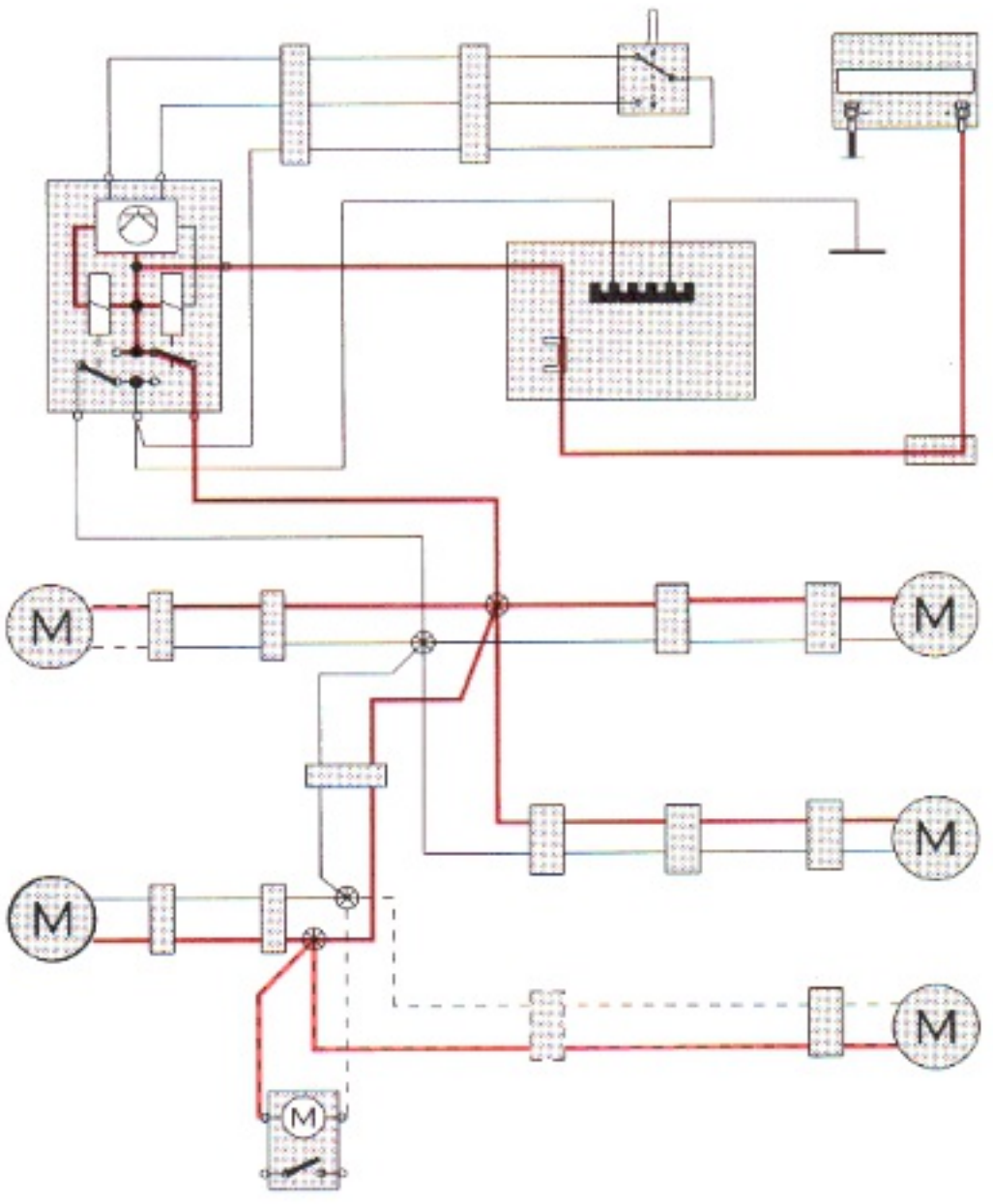

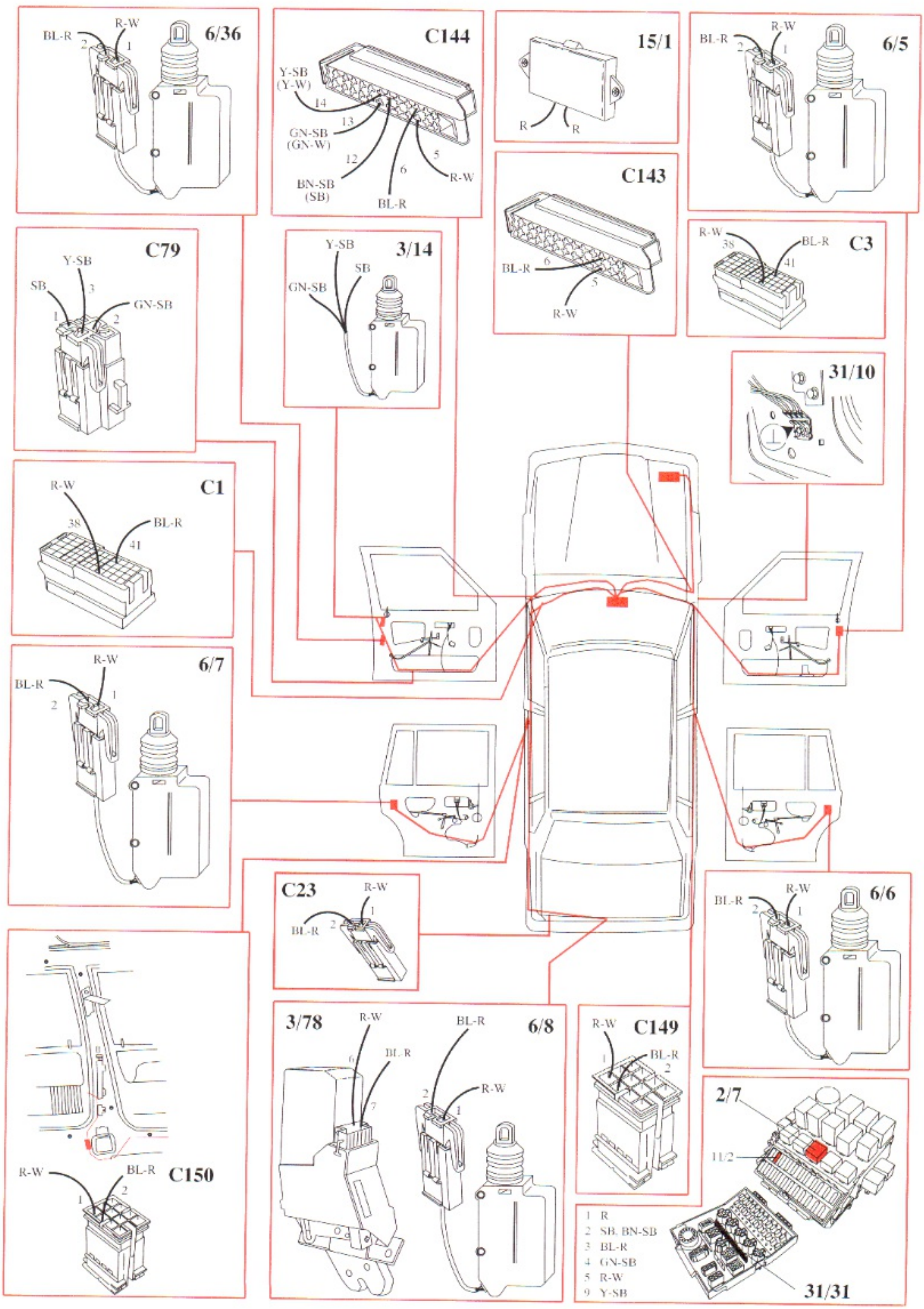
6/36
BL-R
R-W
2
1
C144
Y-SB
(Y-W)
14
13
GN-SB
(GN-W)
12
BN-SB
(SB)
6
BL-R
5
R-W
15/1
R
R
6/5
BL-R
R-W
2
1
C143
BL-R
6
5
R-W
C3
R-W
38
BL-R
41
C79
Y-SB
SB
3
GN-SB
1
2
3/14
Y-SB
SB
GN-SB
31/10
C1
R-W
38
BL-R
41
6/7
R-W
BL-R
2
1
C23
R-W
BL-R
2
1
6/6
BL-R
R-W
2
1
C150
R-W
BL-R
1
2
3/78
R-W
BL-R
6
7
6/8
BL-R
2
R-W
1
C149
R-W
BL-R
1
2
2/7
11/2
1 R
2 SB, BN-SB
3 BL-R
4 GN-SB
5 R-W
9 Y-SB
31/31

Power sunroof

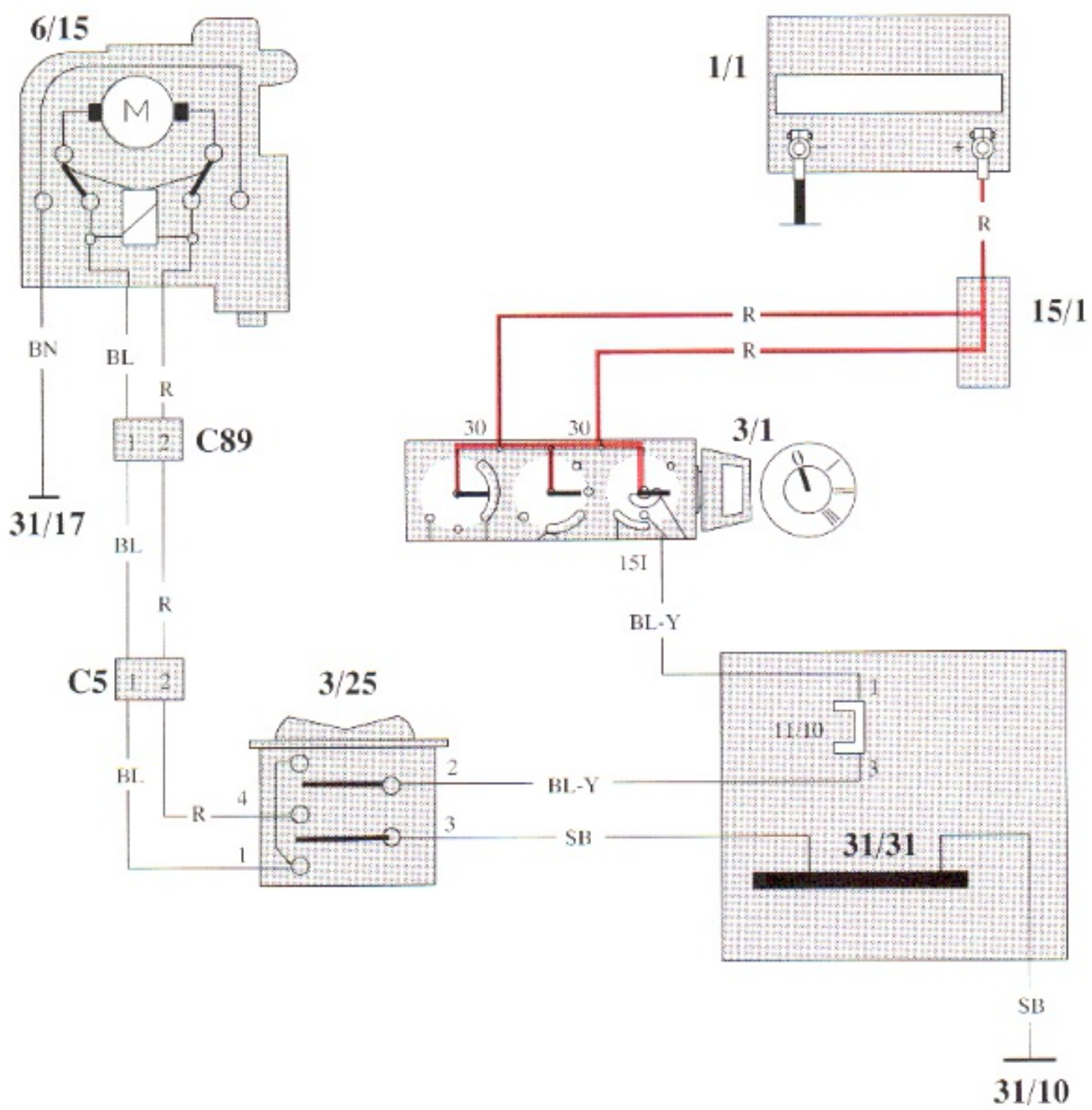

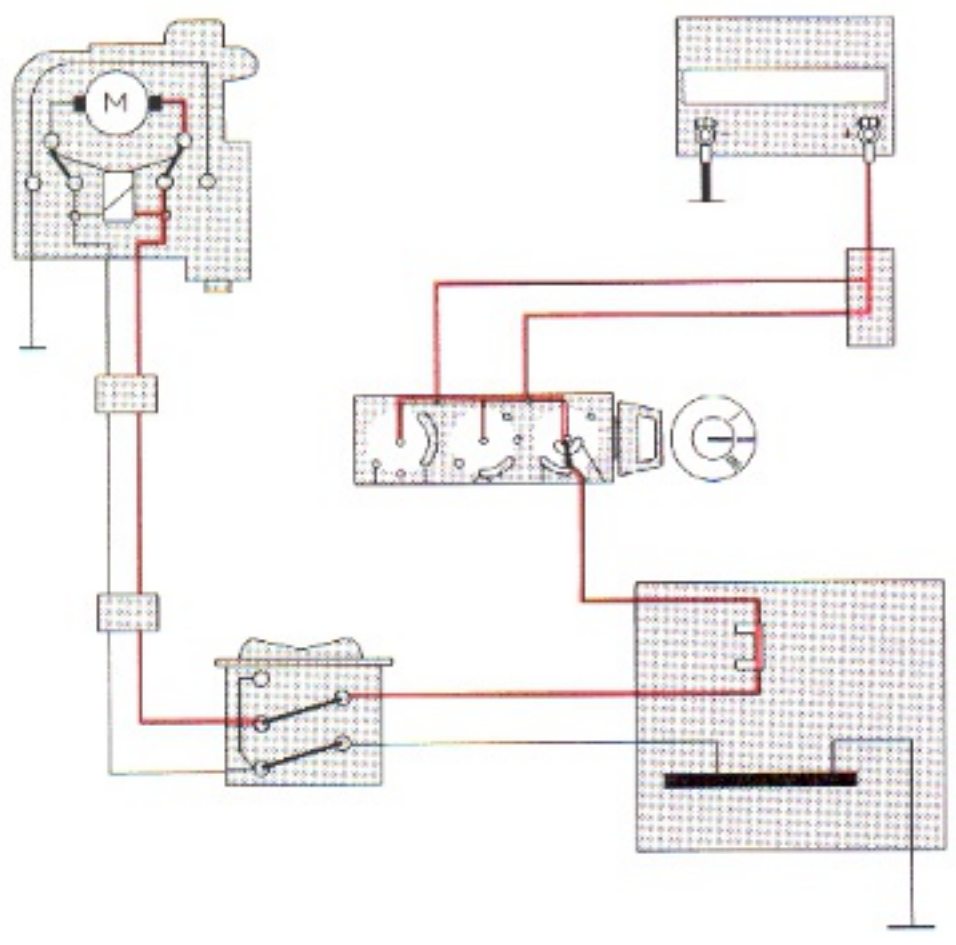

Sunroof operation

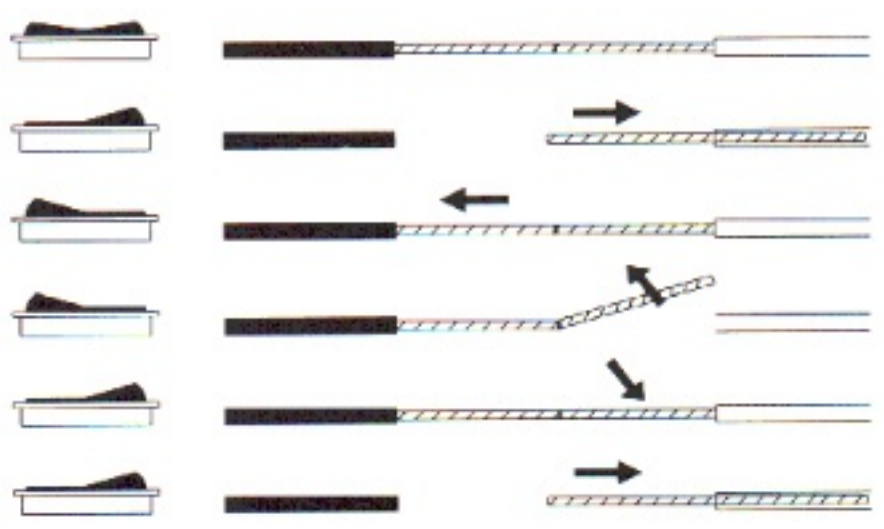

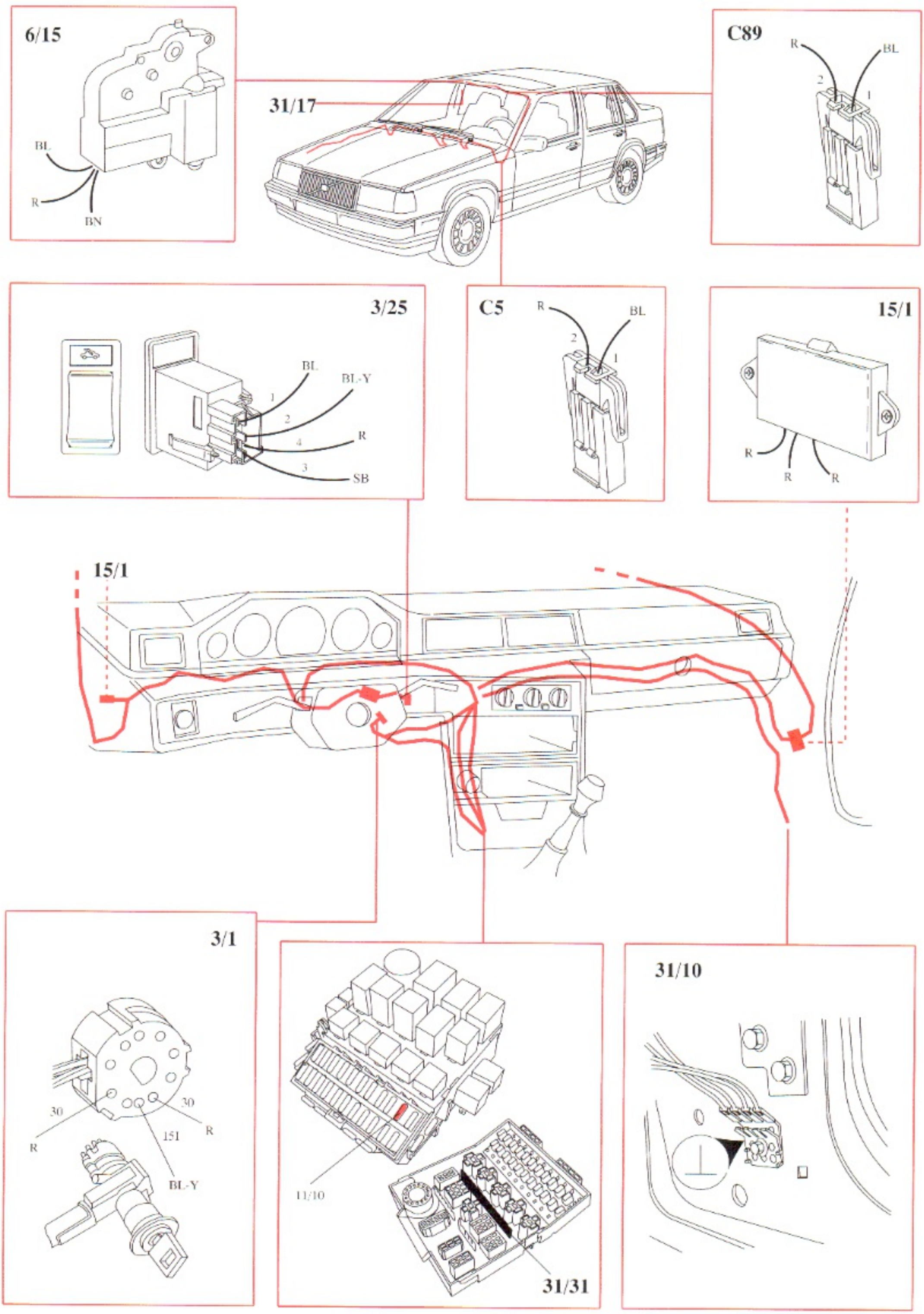
6/15
BL
R
BN
31/17
C89
R
BL
2
1
3/25
BL
BL-Y
1
2
4
R
3
SB
C5
R
BL
2
1
15/1
R
R
R
15/1
3/1
30
30
R
R
151
BL-Y
11/10
31/31
31/10

Heated rear window

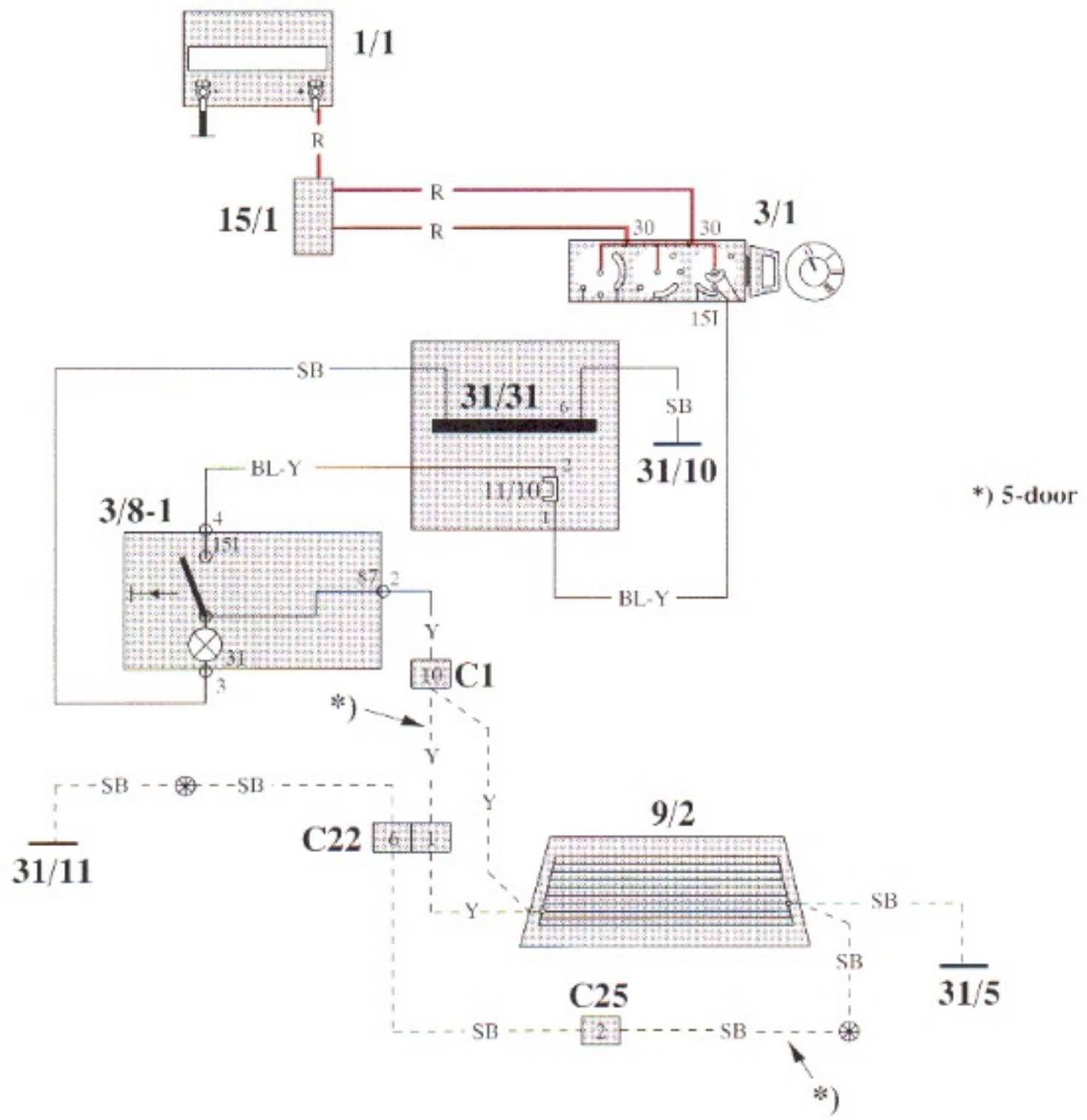

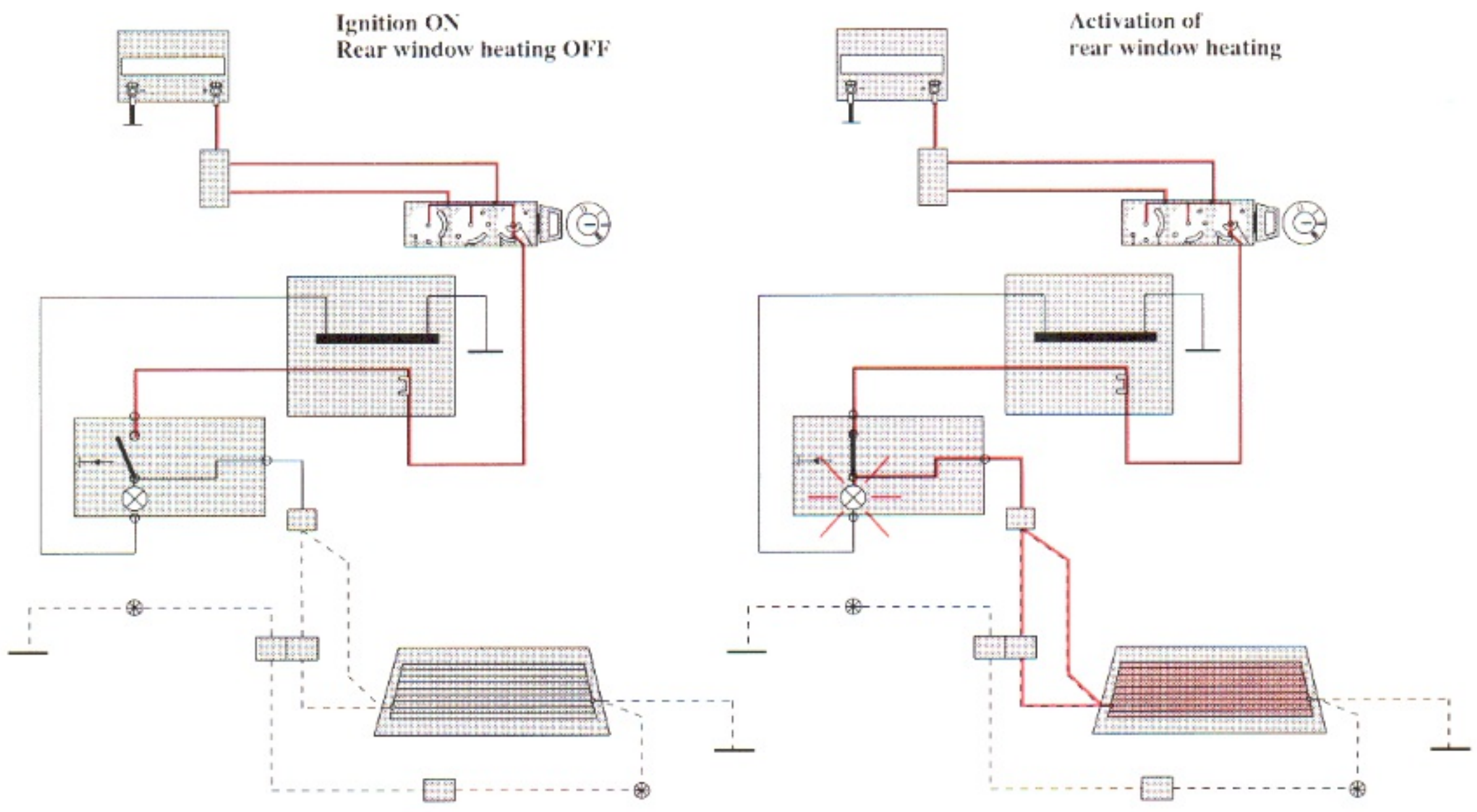

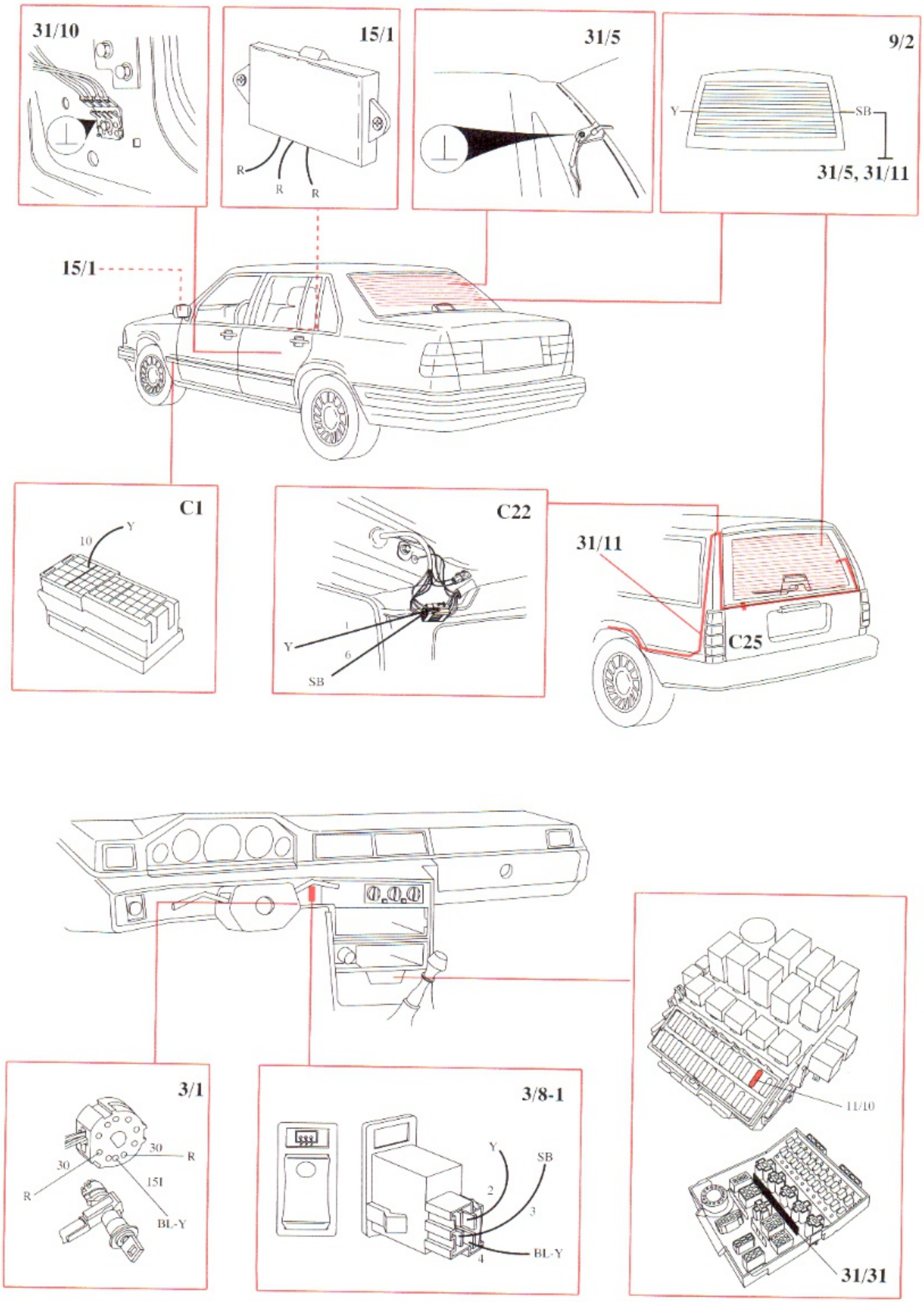
31/10
15/1
R
R
R
31/5
9/2
Y
SB
31/5, 31/11
15/1
C1
10
Y
C22
1
Y
6
SB
31/11
C25
3/1
30
R
30
15I
R
BL-Y
3/8-1
Y
SB
2
3
4
BL-Y
11/10
31/31

Heated rear window and door mirrors with timer relay

Rear window and door mirror heating ON.
Timer relay turns off heat after approx. 6 mins. for mirrors, and after approx 12 mins. for rear window.

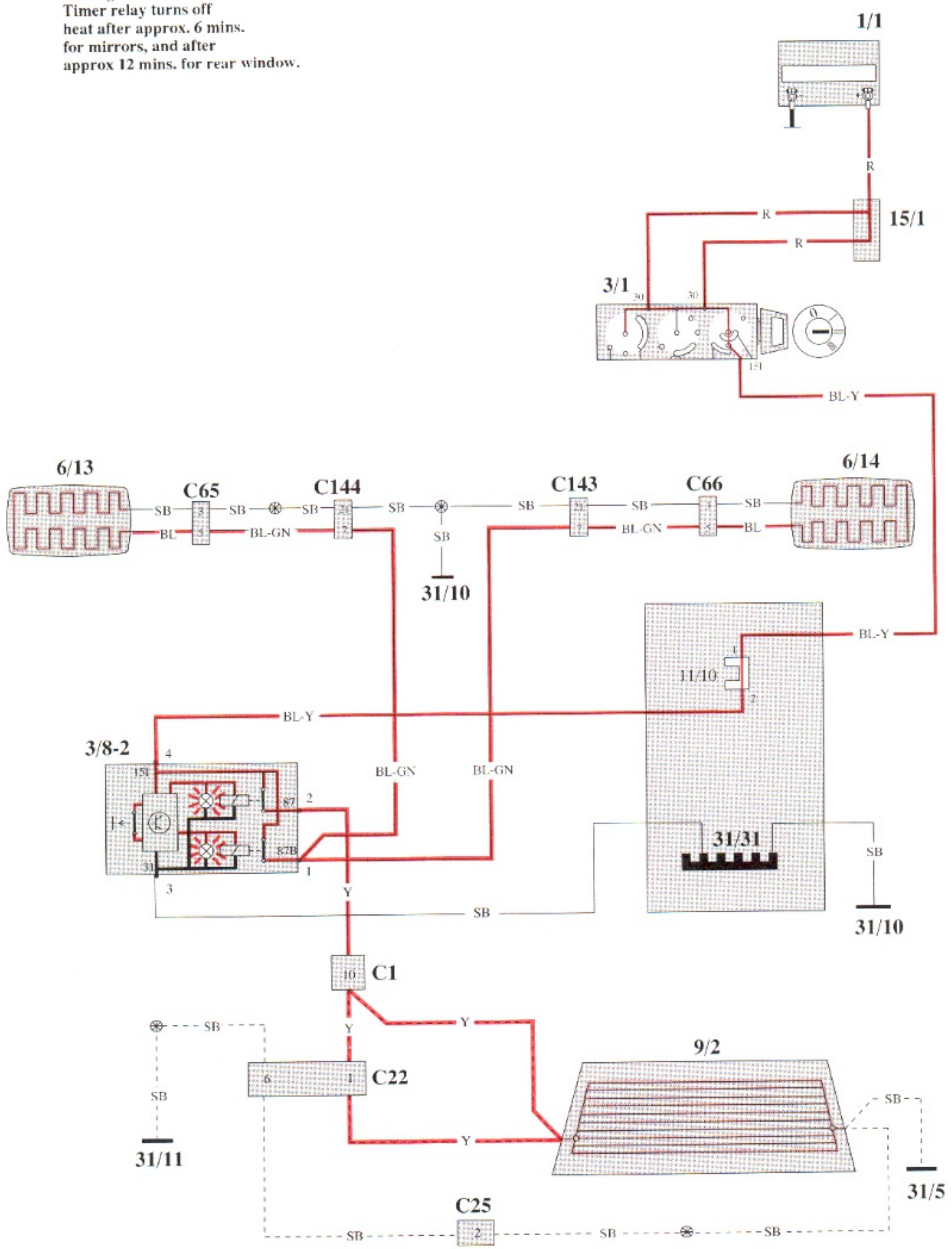

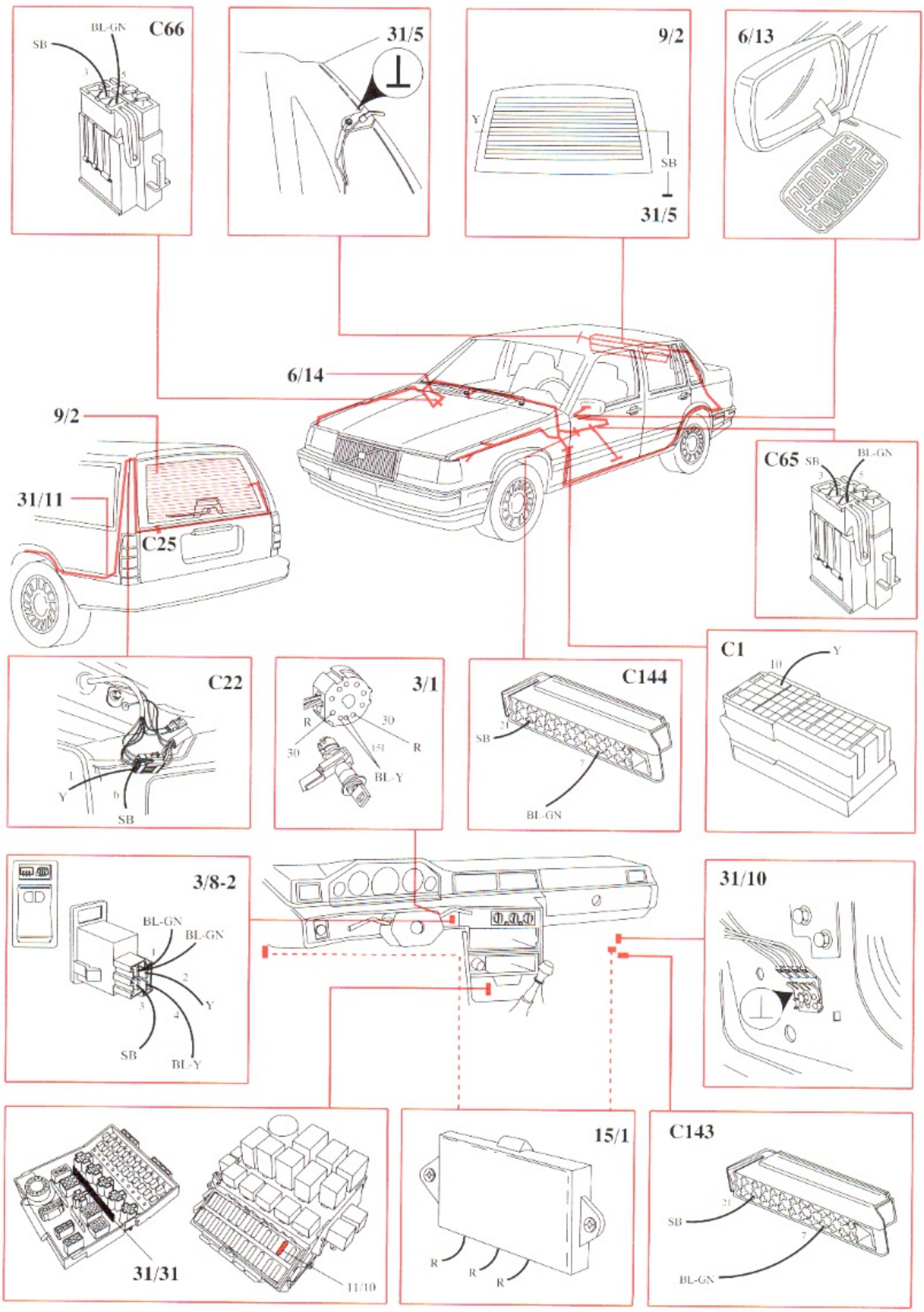
C66
SB
BL-GN
3
5
31/5
9/2
Y
SB
31/5
6/13
6/14
9/2
31/11
C25
C65
SB
BL-GN
3
5
C22
1
Y
6
SB
3/1
R
30
30
151
R
BL-Y
C144
21
SB
7
BL-GN
C1
10
Y
3/8-2
BL-GN
BL-GN
1
2
Y
3
4
SB
BL-Y
31/10
31/31
11/10
15/1
R
R
R
C143
21
SB
7
BL-GN

Power door mirrors

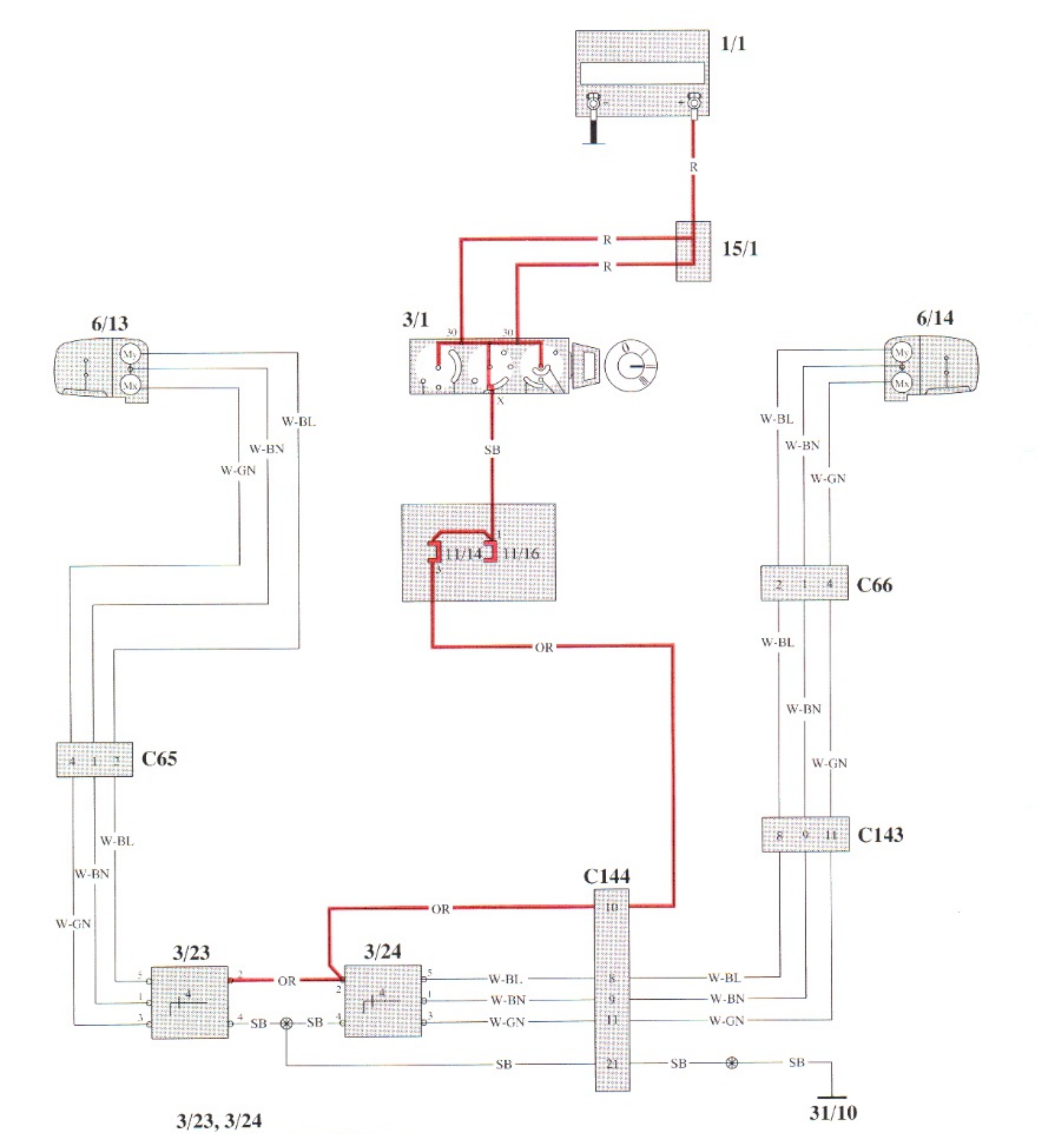

3/23, 3/24

Position		Terminal 1	2	3	4	5
Y1	Y1	X	X	X	X	
X2 Y2 X1	Y2	X	X	X	X	
	X1	X	X		X	X
	X2	X	X		X	X

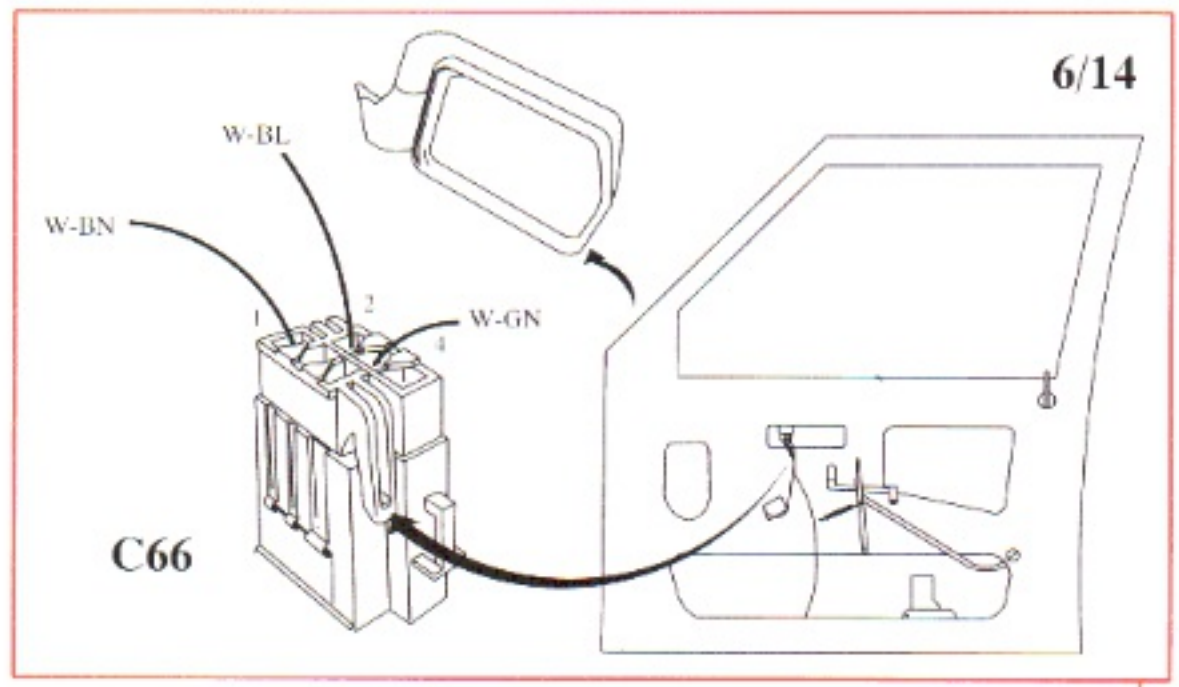
6/14
W-BL
W-BN
W-GN
1
2
4
C66

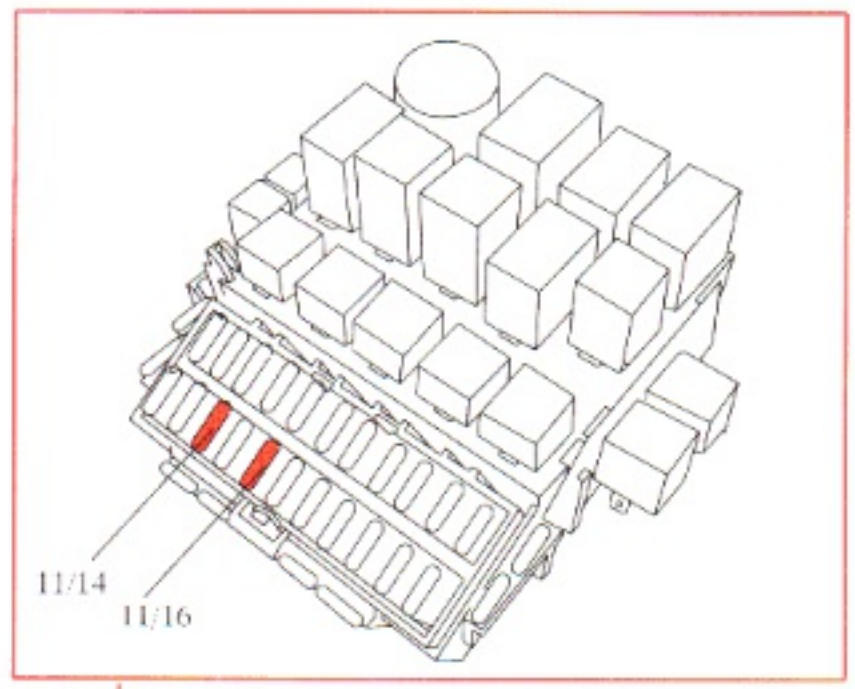
11/14
11/16

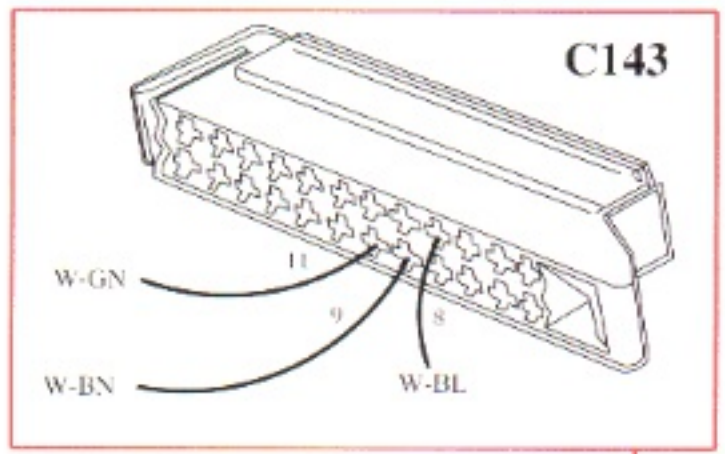
C143
W-GN
11
9
8
W-BN
W-BL

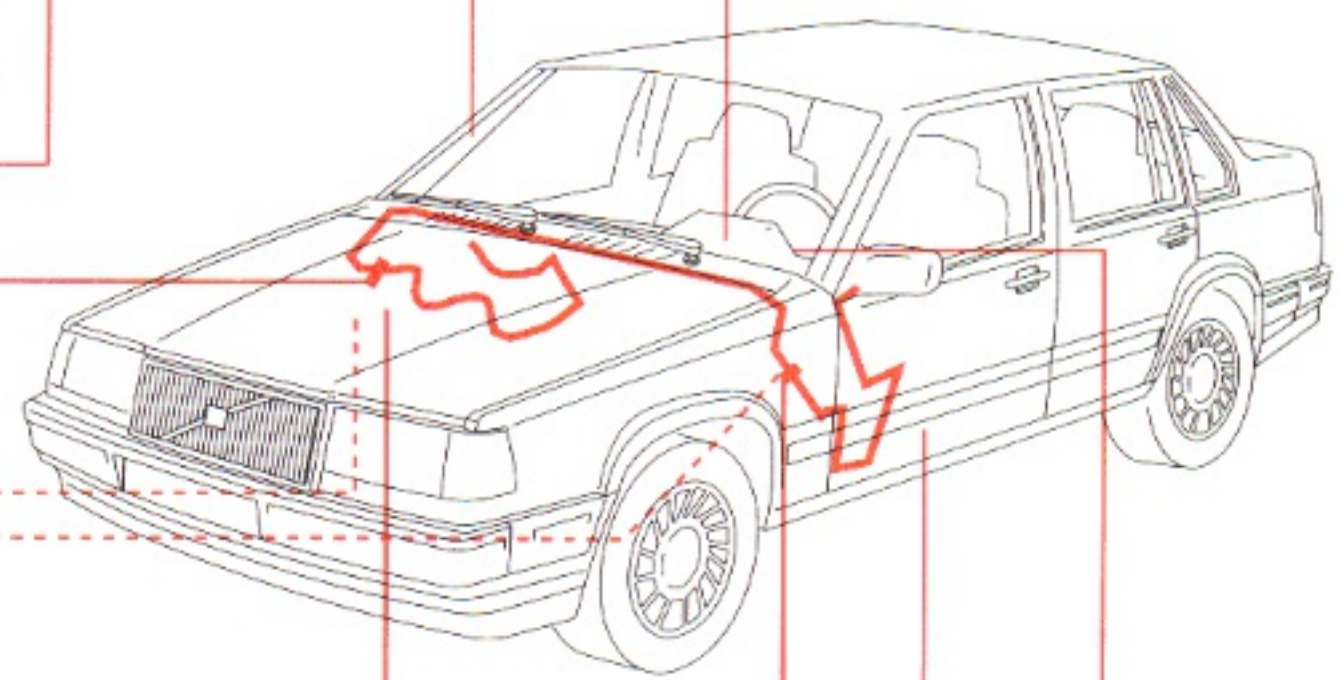

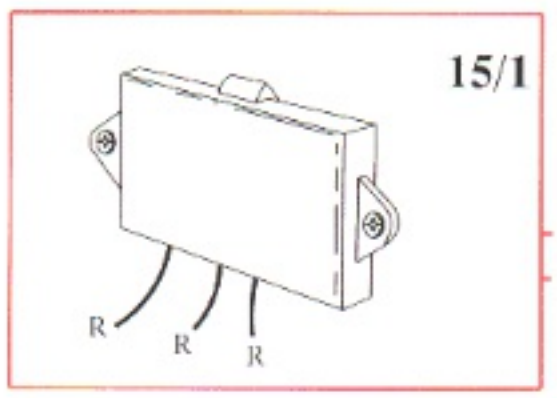
15/1
R
R
R

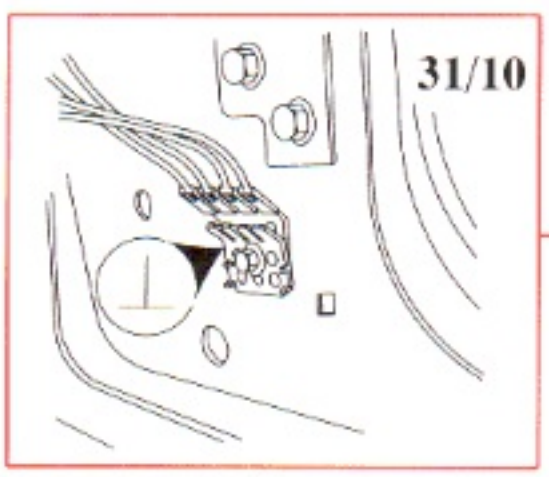
31/10

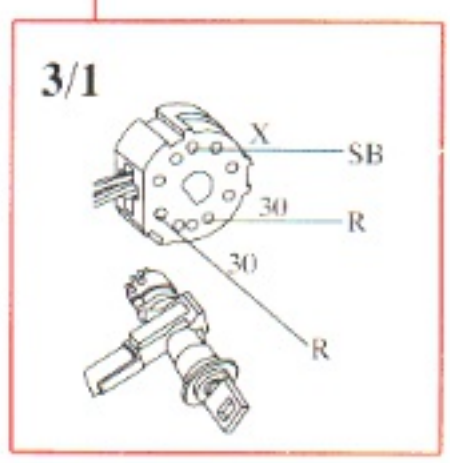
3/1
X
SB
30
R
30
R

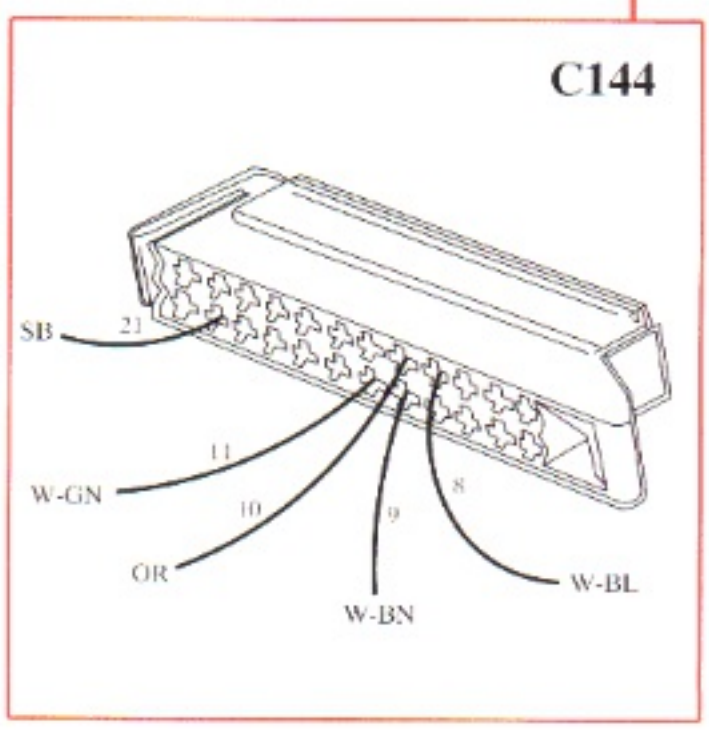
C144
SB
21
11
W-GN
10
OR
9
W-BN
8
W-BL

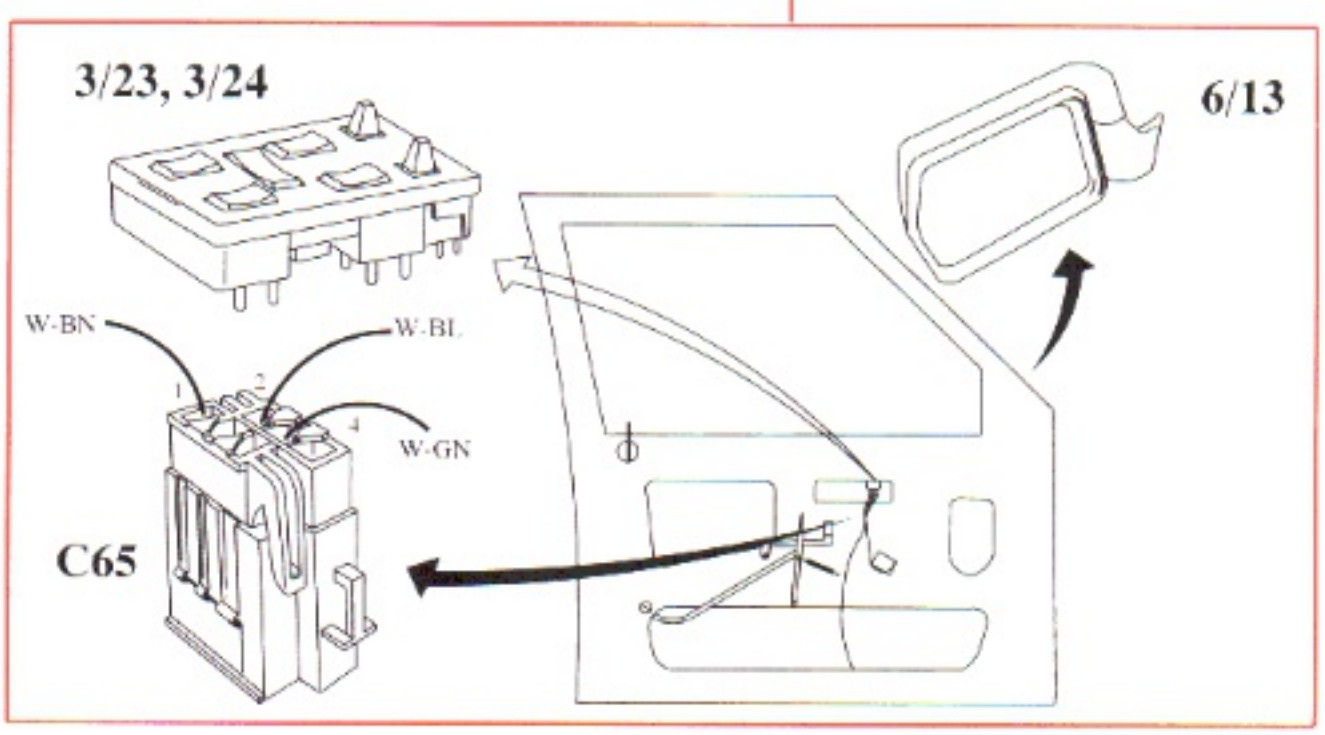
3/23, 3/24
6/13
W-BN
W-BL
1
2
4
W-GN
C65

Heated driver's/passenger's seat, normal output

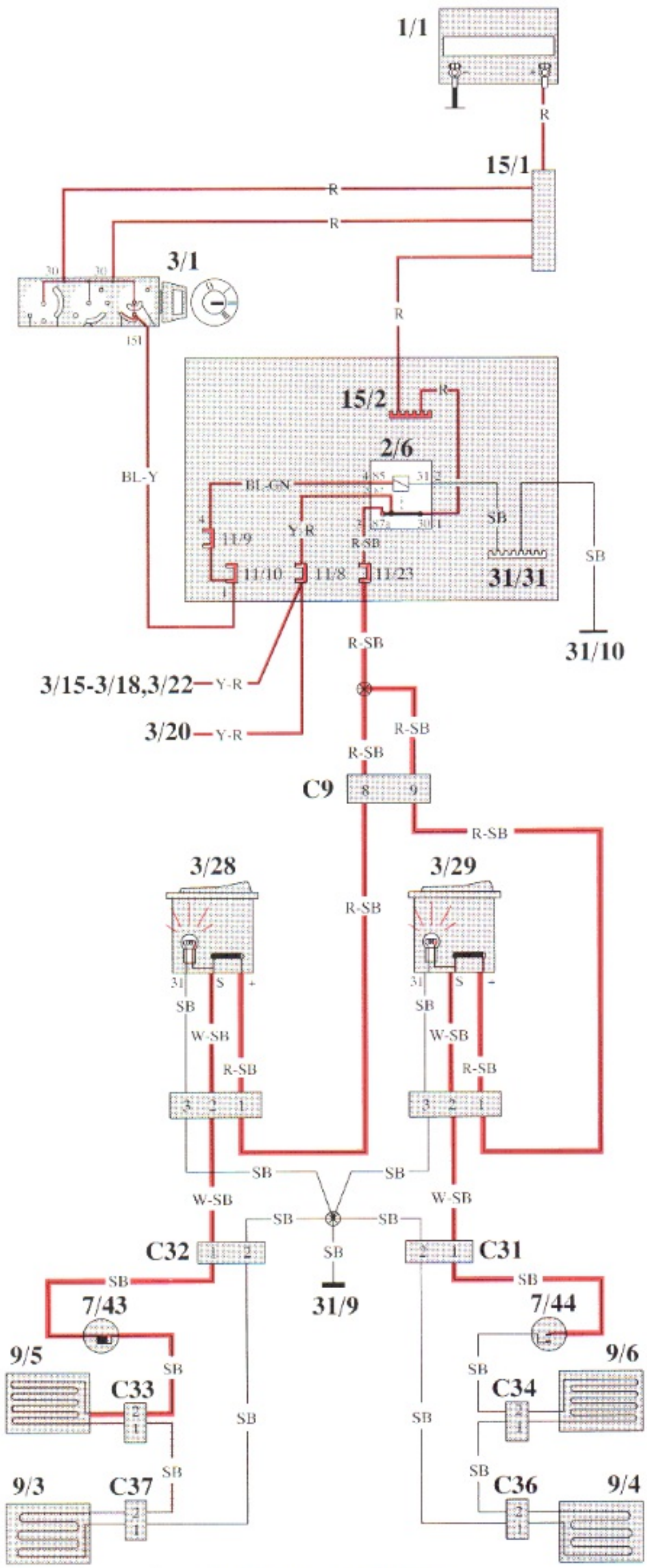

Thermostat activated at +14 C and deactivated at +26 C

Temperature above +26 C: heater elements switched OFF by thermostat

Ignition ON and passenger's seat also ON

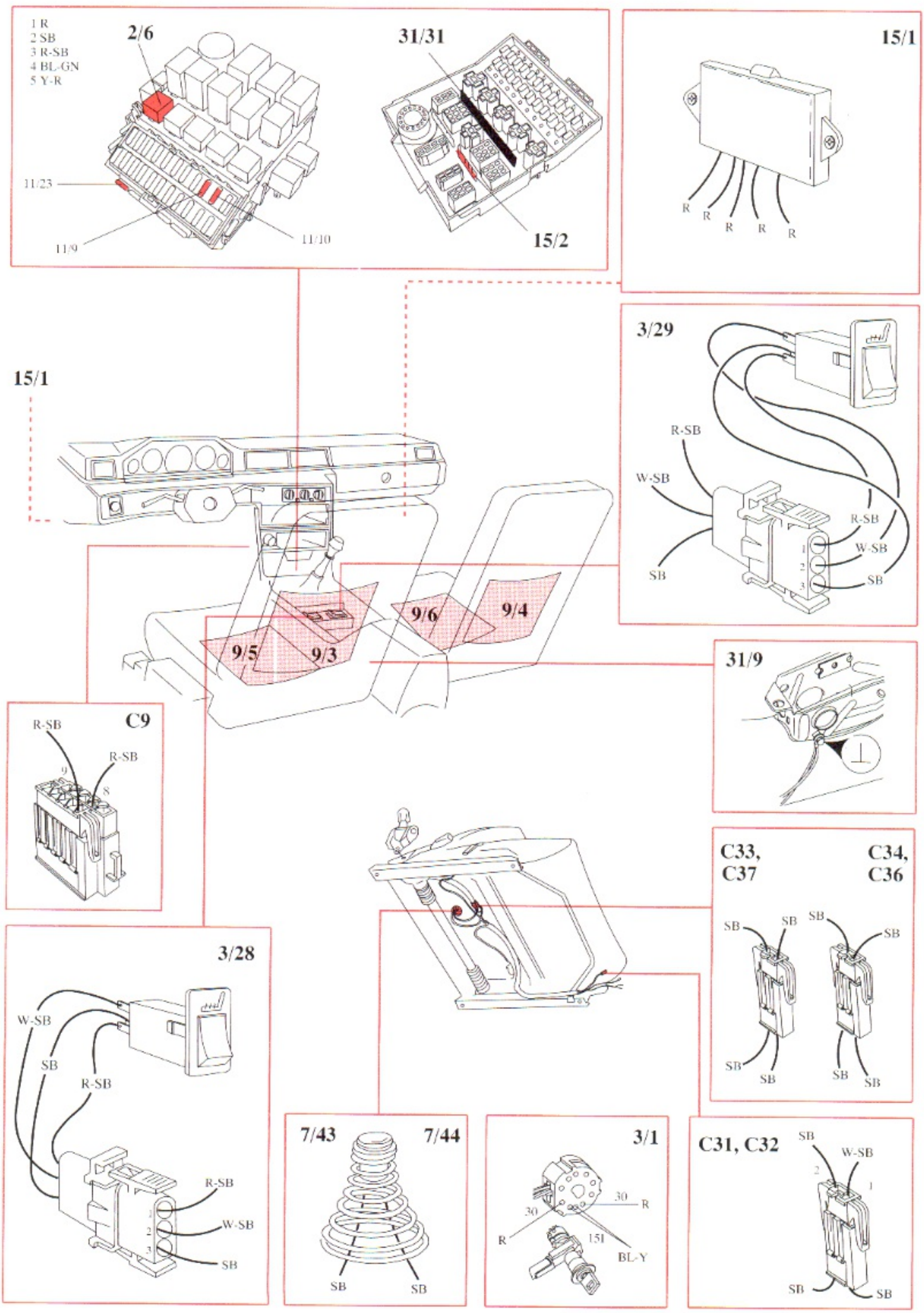
1 R
2 SB
3 R-SB
4 BL-GN
5 Y-R
2/6
11/23
11/9
11/10
31/31
15/2
15/1
R
R
R
R
R
3/29
R-SB
W-SB
SB
R-SB
W-SB
SB
1
2
3
15/1
9/6
9/4
9/5
9/3
31/9
C9
R-SB
R-SB
9
8
C33,
C37
C34,
C36
SB
SB
SB
SB
SB
SB
SB
SB
3/28
W-SB
SB
R-SB
R-SB
W-SB
SB
1
2
3
7/43
7/44
SB
SB
3/1
30
R
30
R
151
BL-Y
C31, C32
SB
W-SB
2
1
SB
SB

Heated driver's/passenger's seat, high output

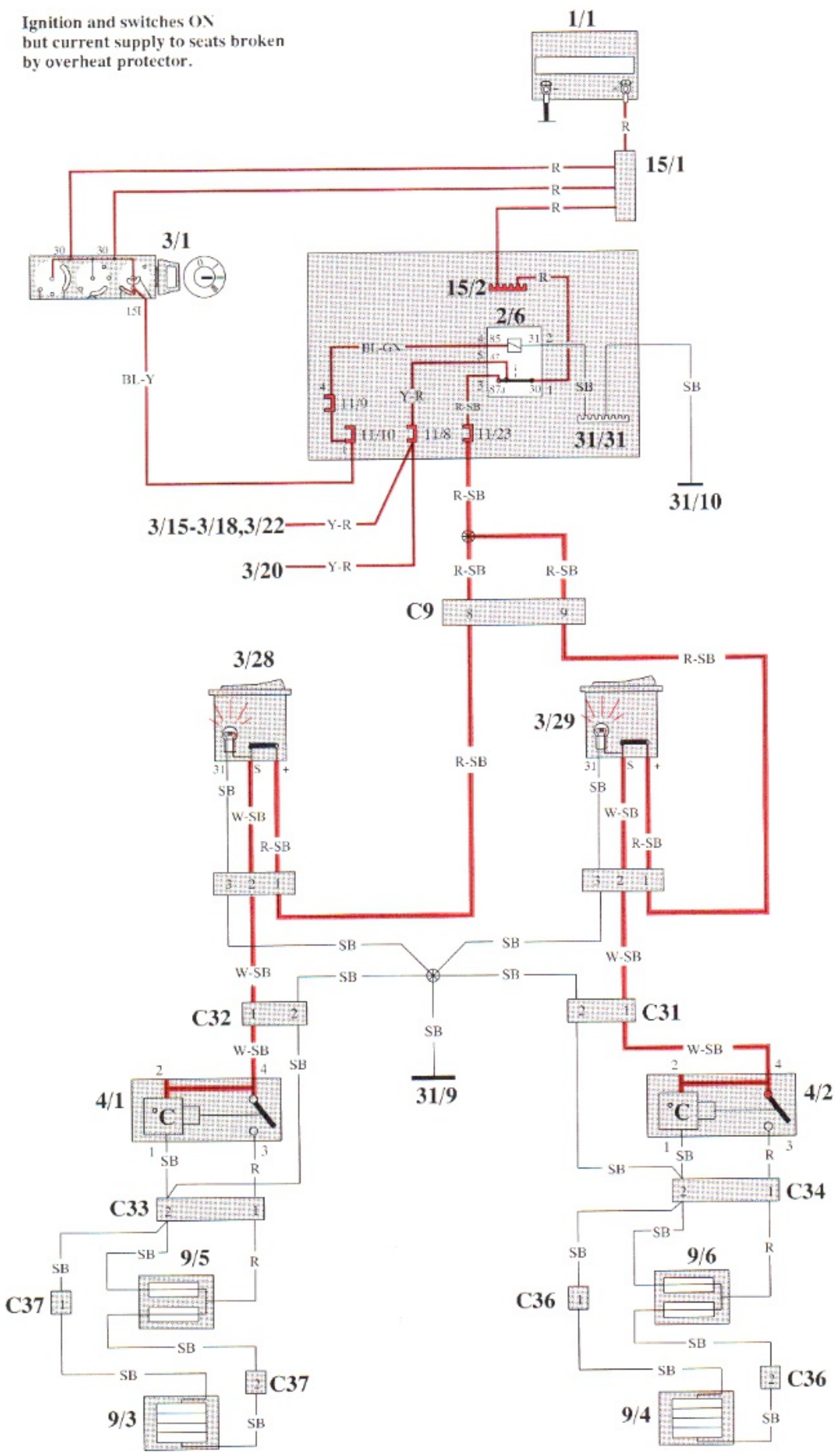

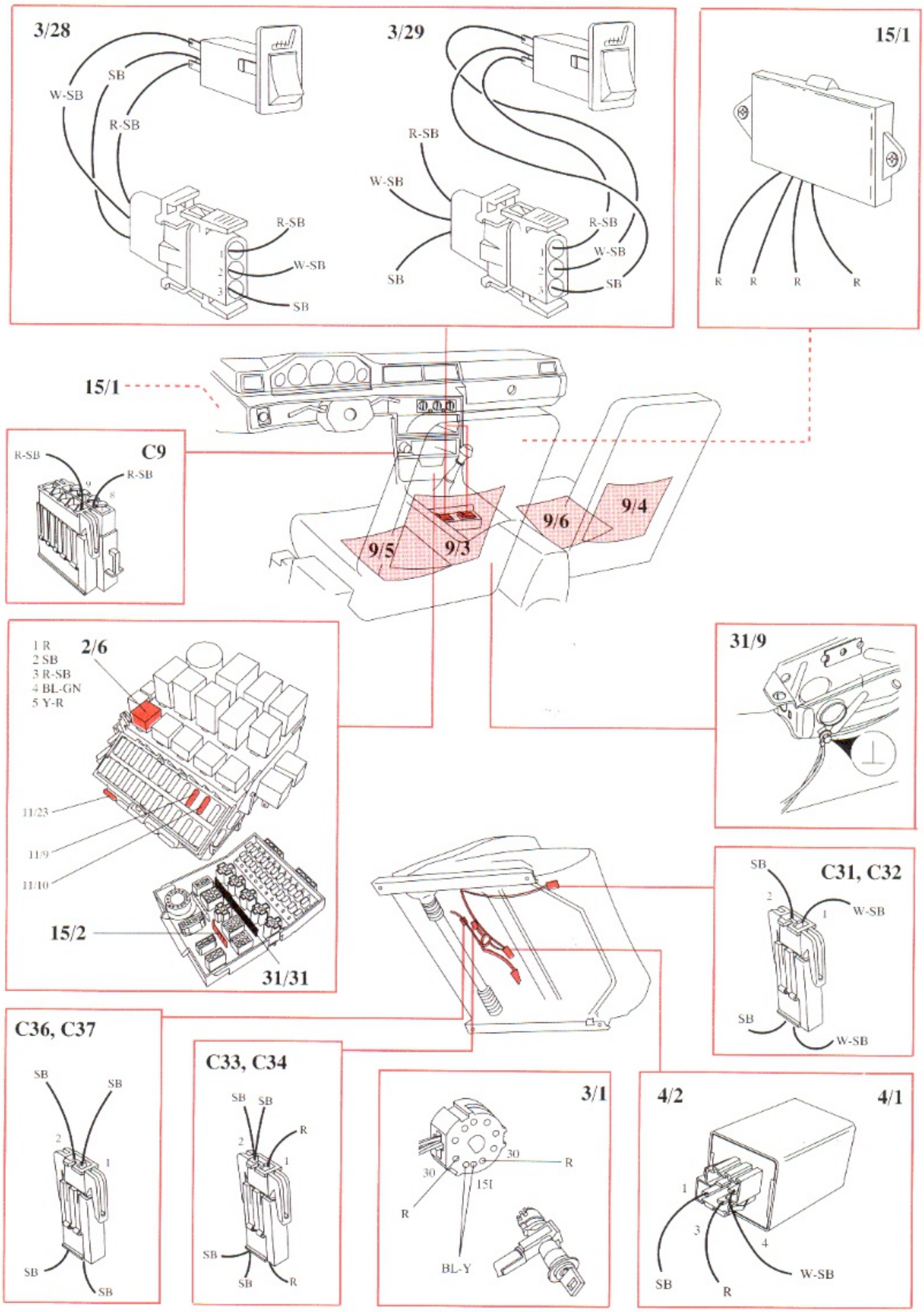
3/28
W-SB
SB
R-SB
R-SB
W-SB
SB
3/29
R-SB
W-SB
SB
R-SB
W-SB
SB
15/1
R
R
R
R
15/1
C9
R-SB
R-SB
9/5
9/3
9/6
9/4
2/6
1 R
2 SB
3 R-SB
4 BL-GN
5 Y-R
11/23
11/9
11/10
15/2
31/31
31/9
C31, C32
SB
W-SB
SB
W-SB
C36, C37
SB
SB
SB
SB
C33, C34
SB
SB
R
SB
SB
R
3/1
30
R
30
15I
R
BL-Y
4/2
4/1
SB
R
W-SB

Power seat

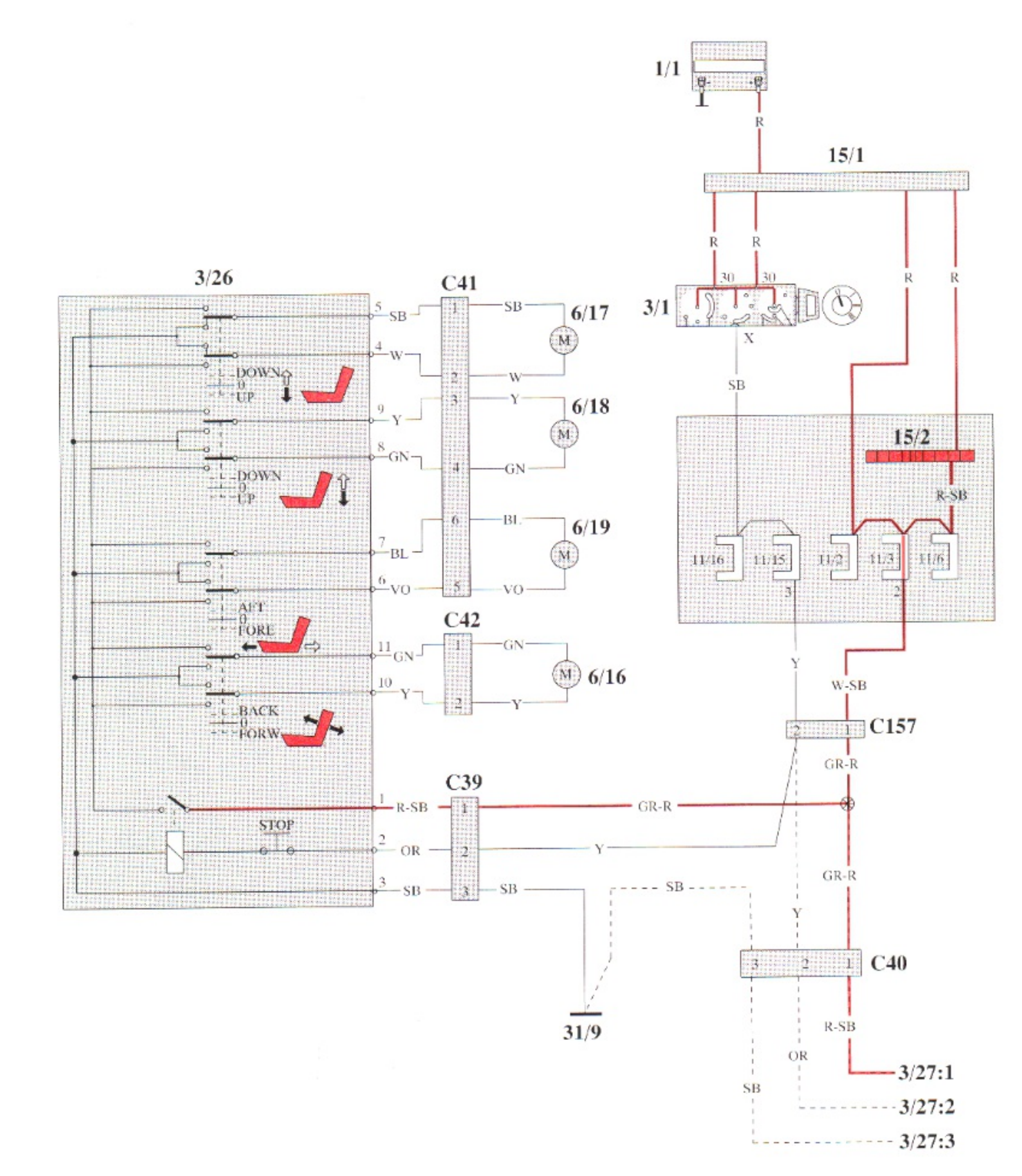
1/1
R
15/1
R
R
30
30
R
R
3/1
X
SB
15/2
R-SB
11/16
11/15
11/2
11/3
11/6
3
2
3/26
5
SB
4
W
DOWN
0
UP
9
Y
8
GN
DOWN
0
UP
7
BL
6
VO
AFT
0
FORE
11
GN
10
Y
BACK
0
FORW
1
R-SB
STOP
2
OR
3
SB
C41
1
SB
6/17
M
2
W
3
Y
6/18
M
4
GN
6
BL
6/19
M
5
VO
C42
1
GN
M
6/16
2
Y
Y
W-SB
C157
2
1
GR-R
C39
1
R-SB
GR-R
2
Y
3
SB
SB
SB
31/9
GR-R
Y
3
2
1
C40
R-SB
OR
SB
3/27:1
3/27:2
3/27:3

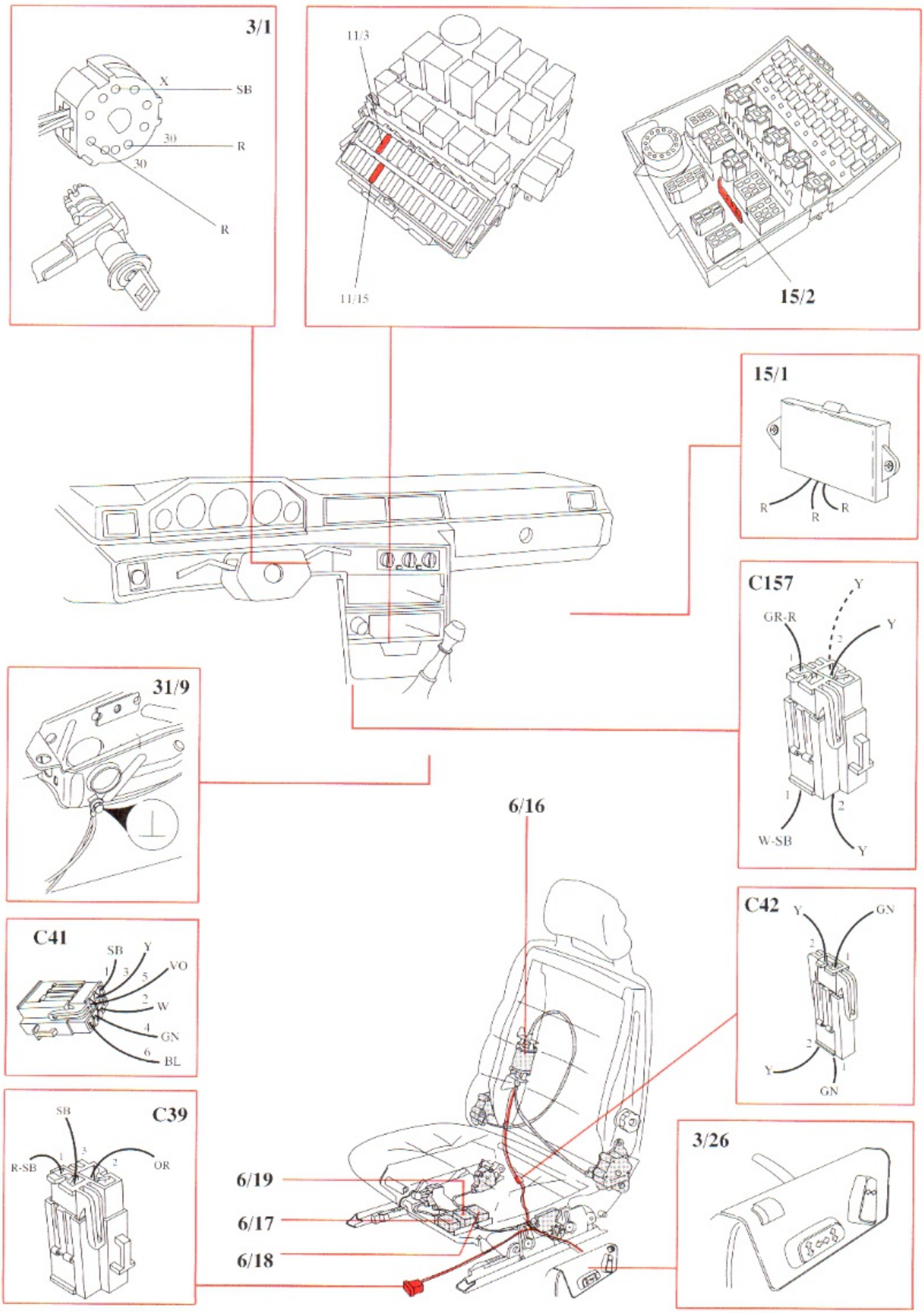
3/1
X
SB
30
R
30
R
11/3
11/15
15/2
15/1
R
R
R
C157
Y
GR-R
Y
1
2
1
2
W-SB
Y
31/9
6/16
C41
SB
Y
VO
1
3
5
2
W
4
GN
6
BL
C42
Y
GN
2
1
2
1
Y
GN
C39
SB
R-SB
1
3
2
OR
6/19
6/17
6/18
3/26

Power seat with memory

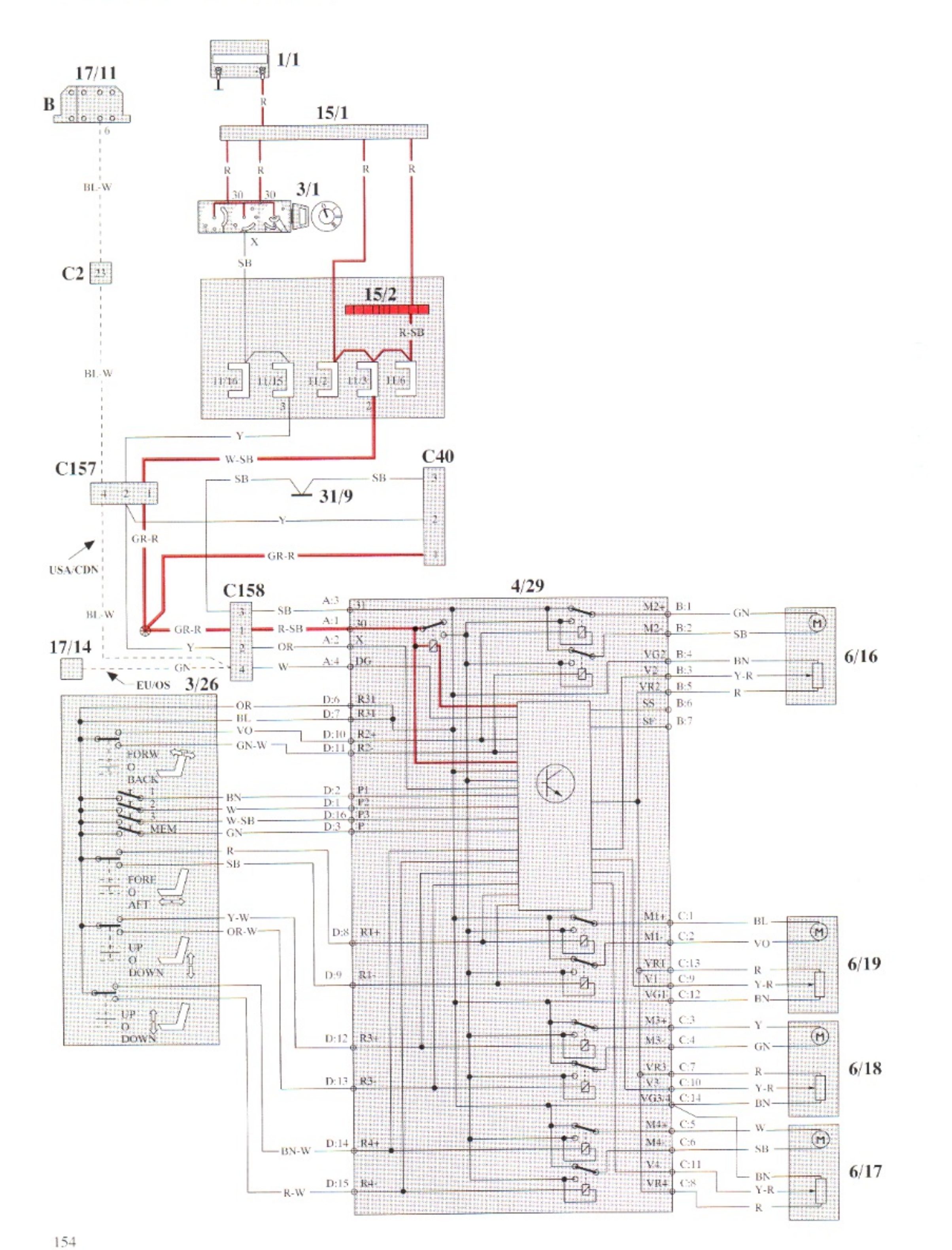

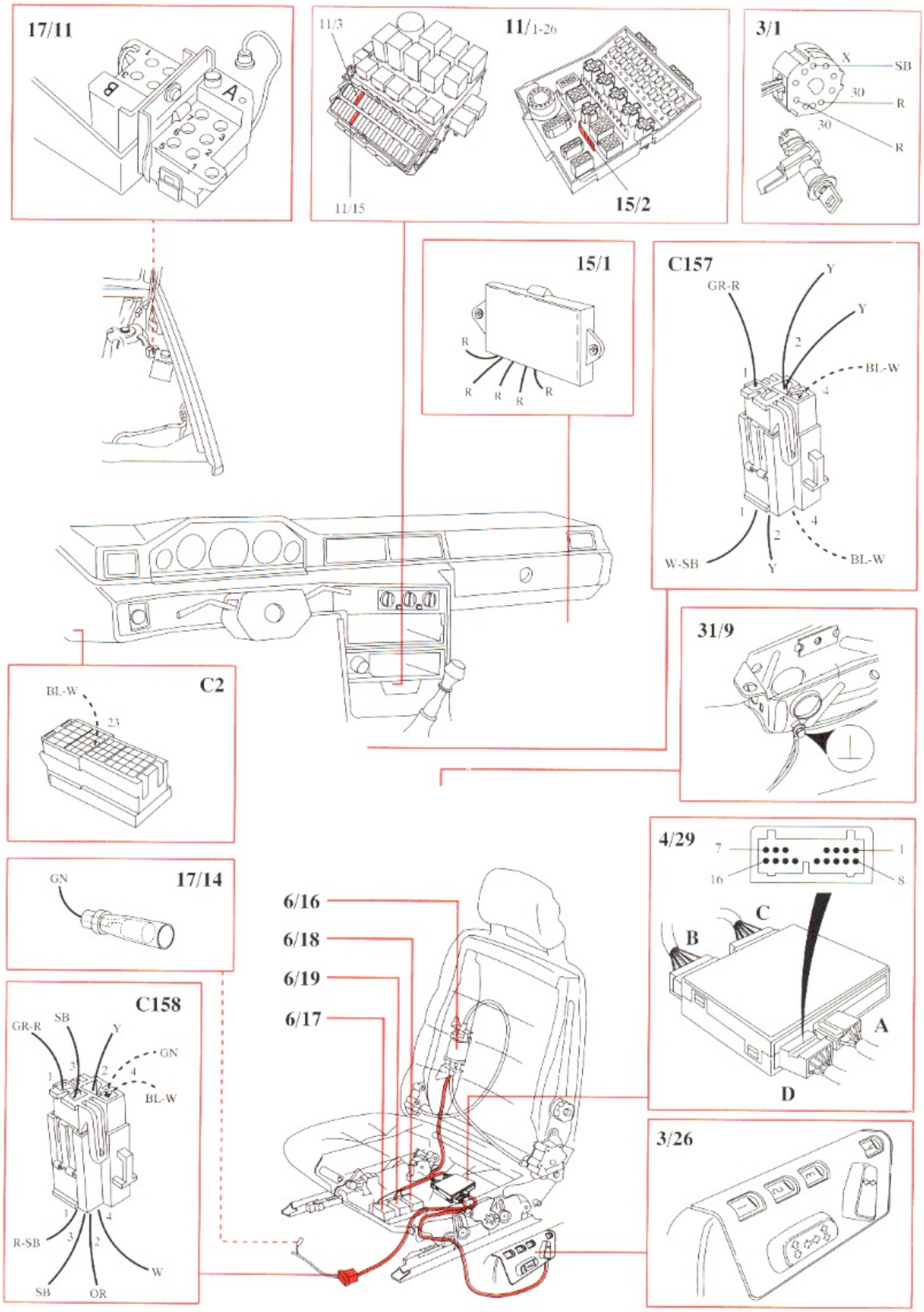
17/11
B
A
11/3
11/1-26
11/15
15/2
3/1
X
SB
30
R
30
R
15/1
R
R
R
R
R
C157
GR-R
Y
Y
2
1
BL-W
4
1
2
4
W-SB
Y
BL-W
31/9
C2
BL-W
23
17/14
GN
6/16
6/18
6/19
6/17
C158
GR-R
SB
Y
GN
1
3
2
4
BL-W
1
4
R-SB
3
2
W
SB
OR
4/29
7
1
16
8
C
B
A
D
3/26

Cabin fan, standard heater

Fan operating at speed 1

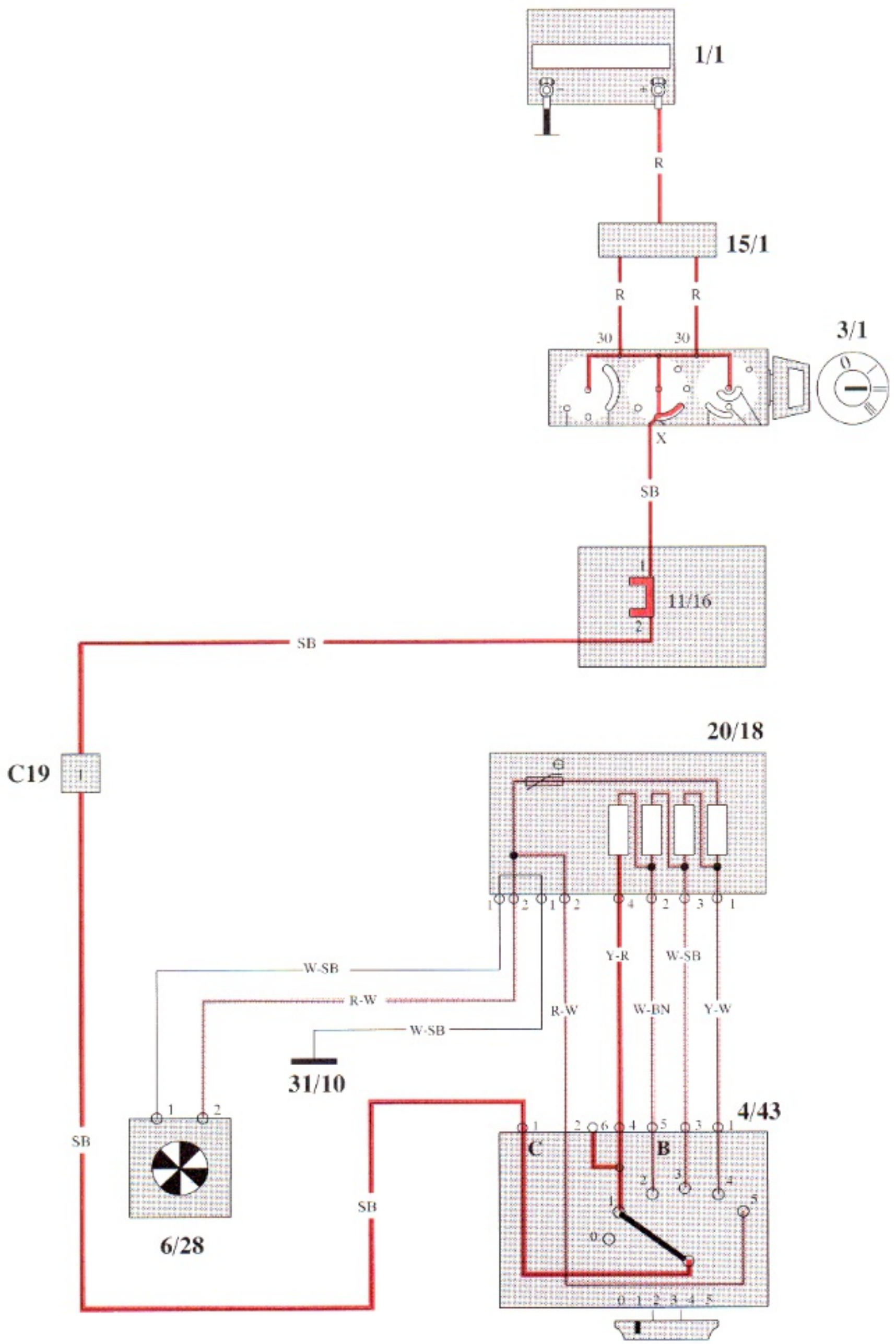

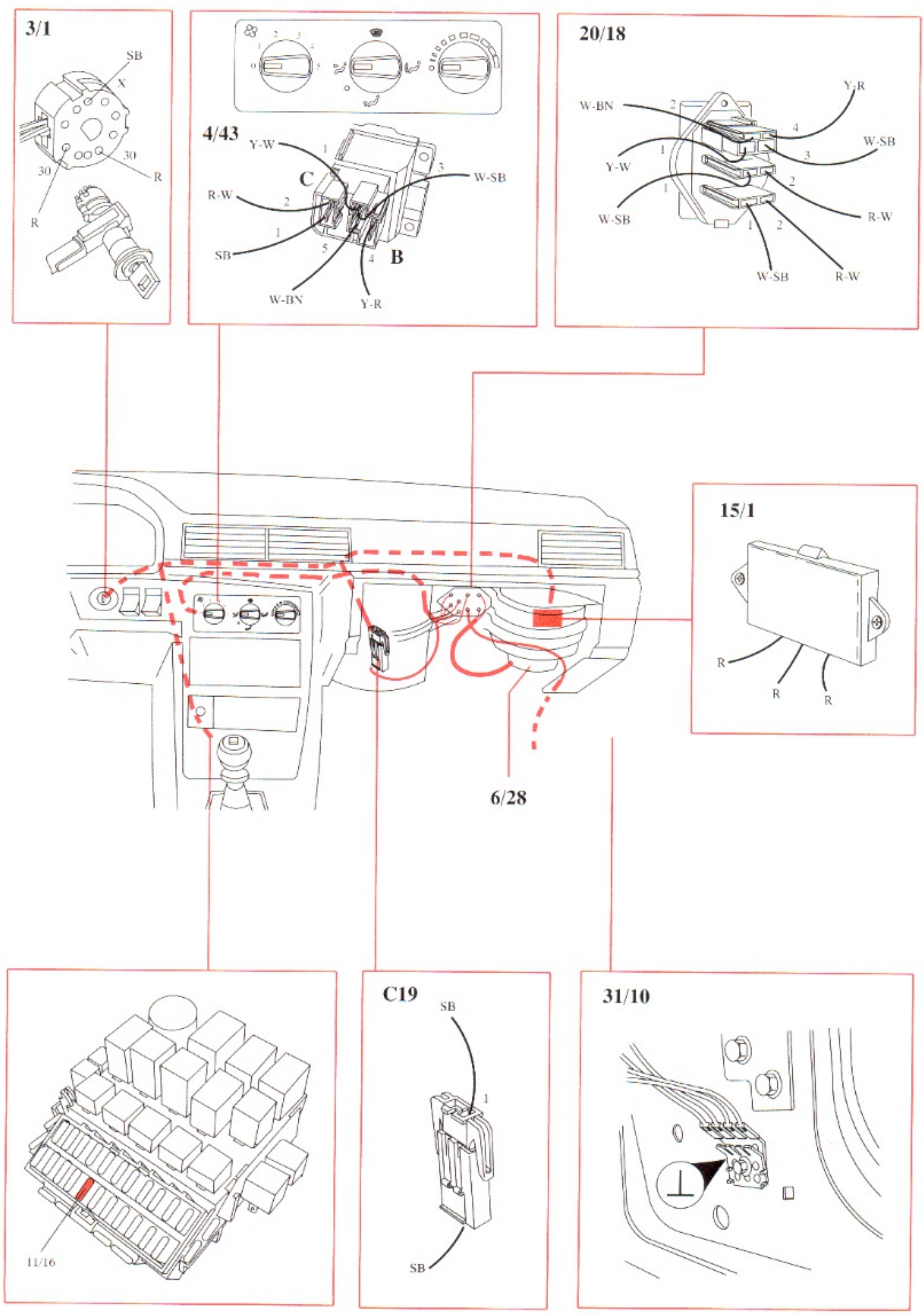
3/1
SB
X
30
30
R
R
4/43
Y-W
C
R-W
SB
W-BN
Y-R
W-SB
B
20/18
W-BN
Y-R
W-SB
Y-W
R-W
W-SB
W-SB
R-W
15/1
R
R
R
6/28
11/16
C19
SB
SB
31/10

Manual Climate Control (MCC)

One precondition for the climate unit to work is that the fan must be ON, at any speed (signal from 4/40B:6 to 4/40A:7).

Fan at speed 1. Climate unit ON.

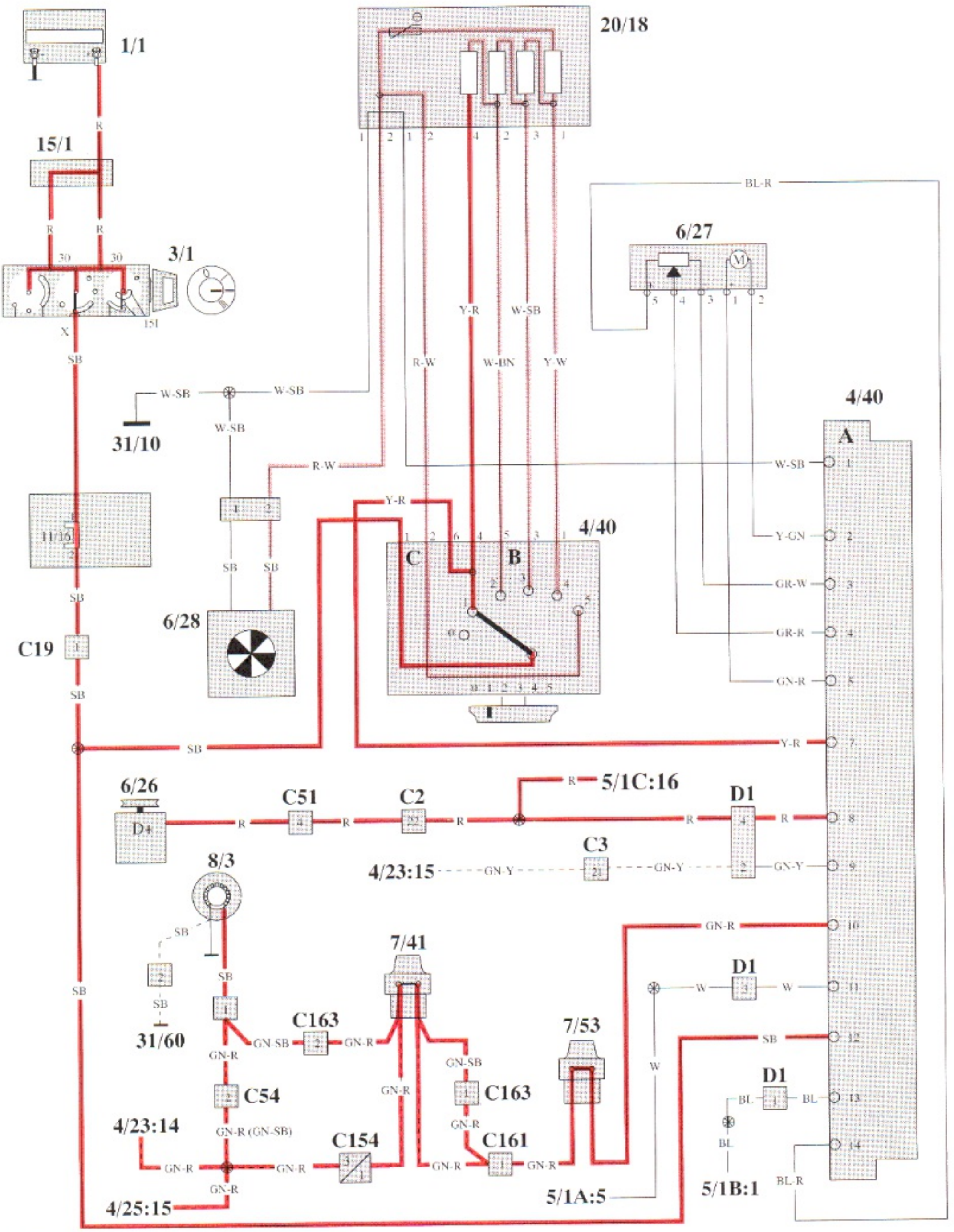

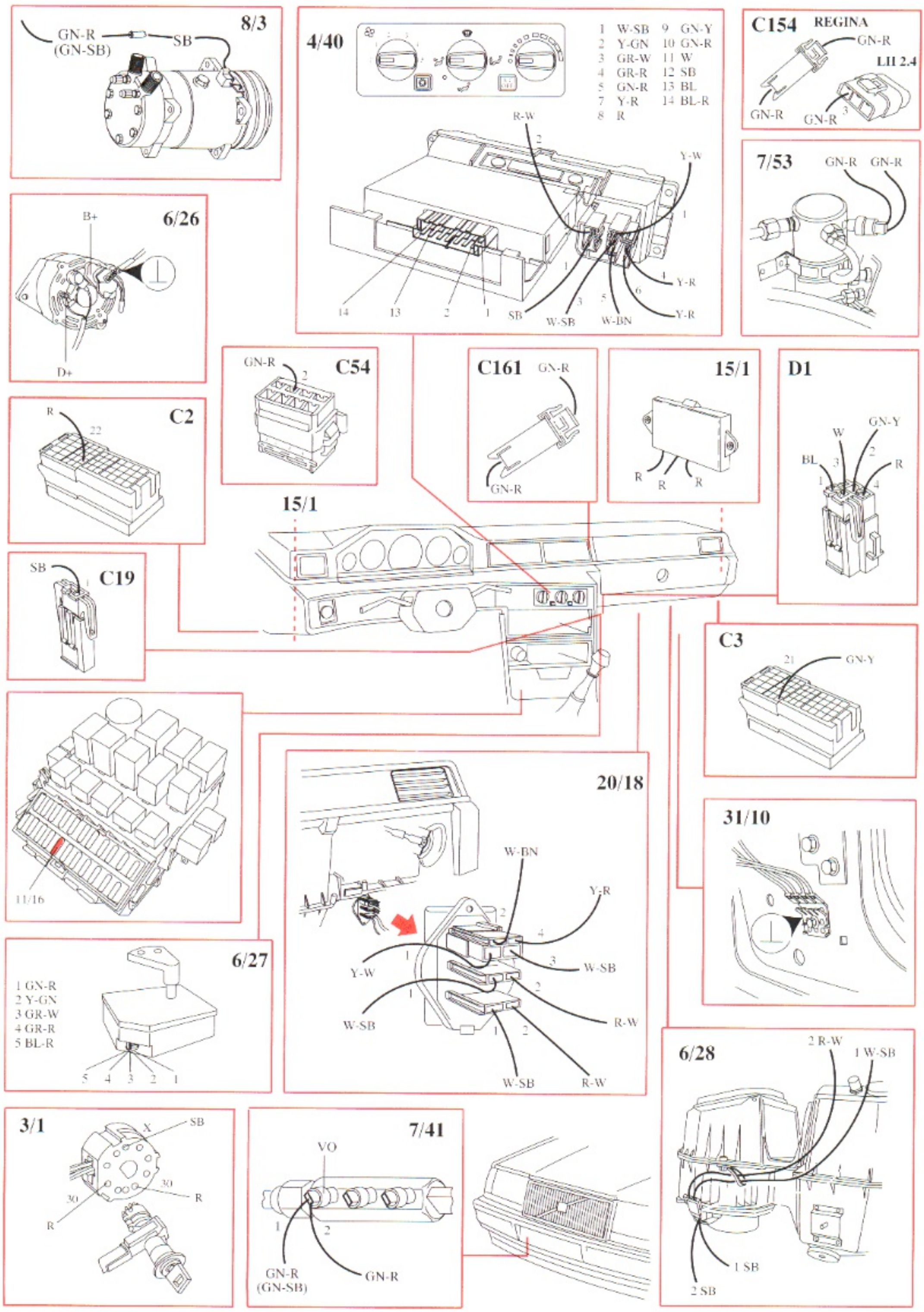
8/3
GN-R
(GN-SB)
SB
4/40
1 W-SB
2 Y-GN
3 GR-W
4 GR-R
5 GN-R
7 Y-R
8 R
9 GN-Y
10 GN-R
11 W
12 SB
13 BL
14 BL-R
R-W
Y-W
Y-R
SB
W-SB
W-BN
C154 REGINA
GN-R
LII 2.4
7/53
GN-R GN-R
6/26
B+
D+
C54
GN-R
C161 GN-R
15/1
D1
GN-Y
W
BL
R
C2
R
22
15/1
C19
SB
C3
21
GN-Y
11/16
20/18
W-BN
Y-R
Y-W
W-SB
R-W
31/10
6/27
1 GN-R
2 Y-GN
3 GR-W
4 GR-R
5 BL-R
6/28
2 R-W
1 W-SB
1 SB
2 SB
3/1
X
SB
30
R
7/41
VO
GN-R
(GN-SB)
GN-R

Electronic Climate Control (ECC)

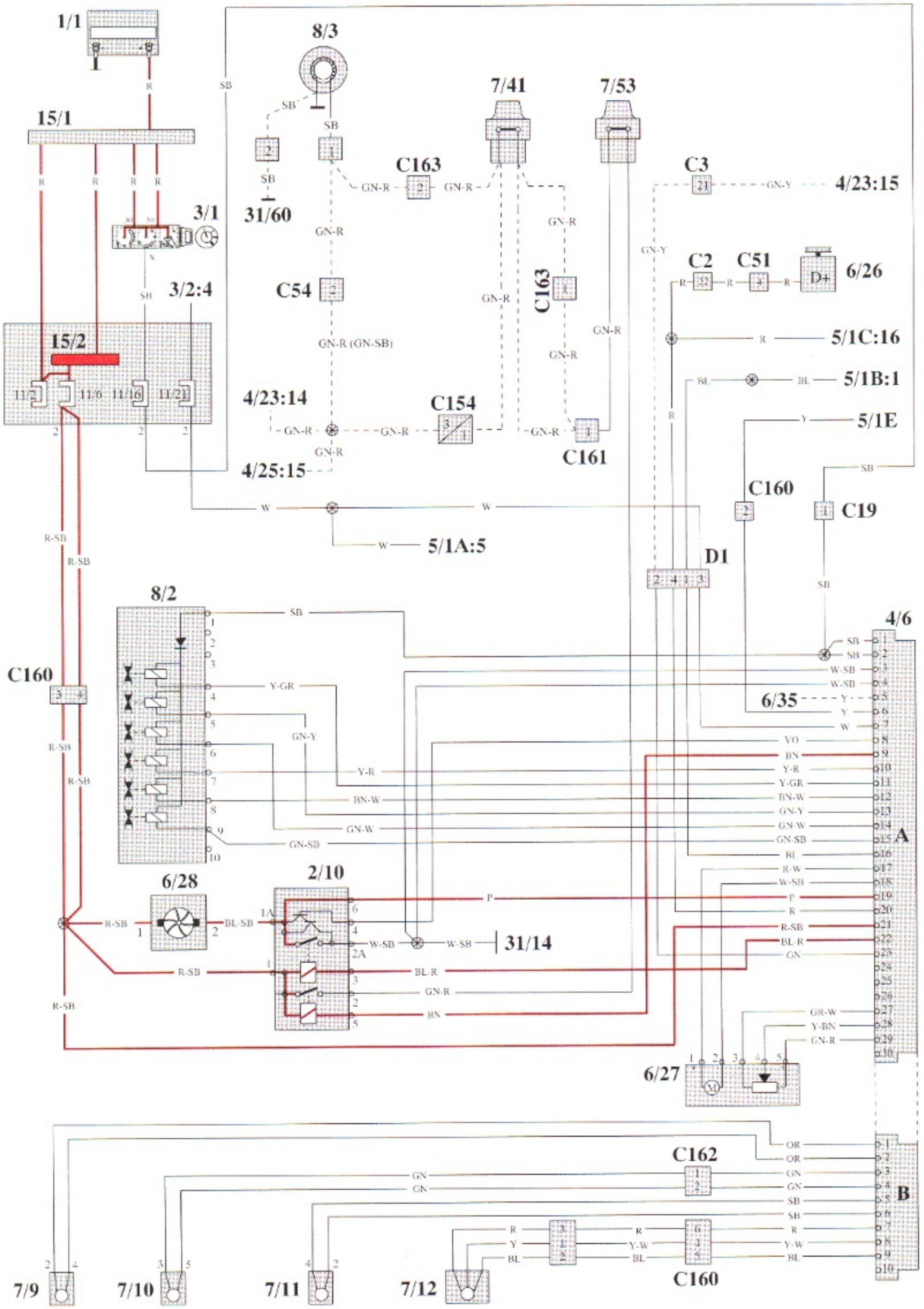

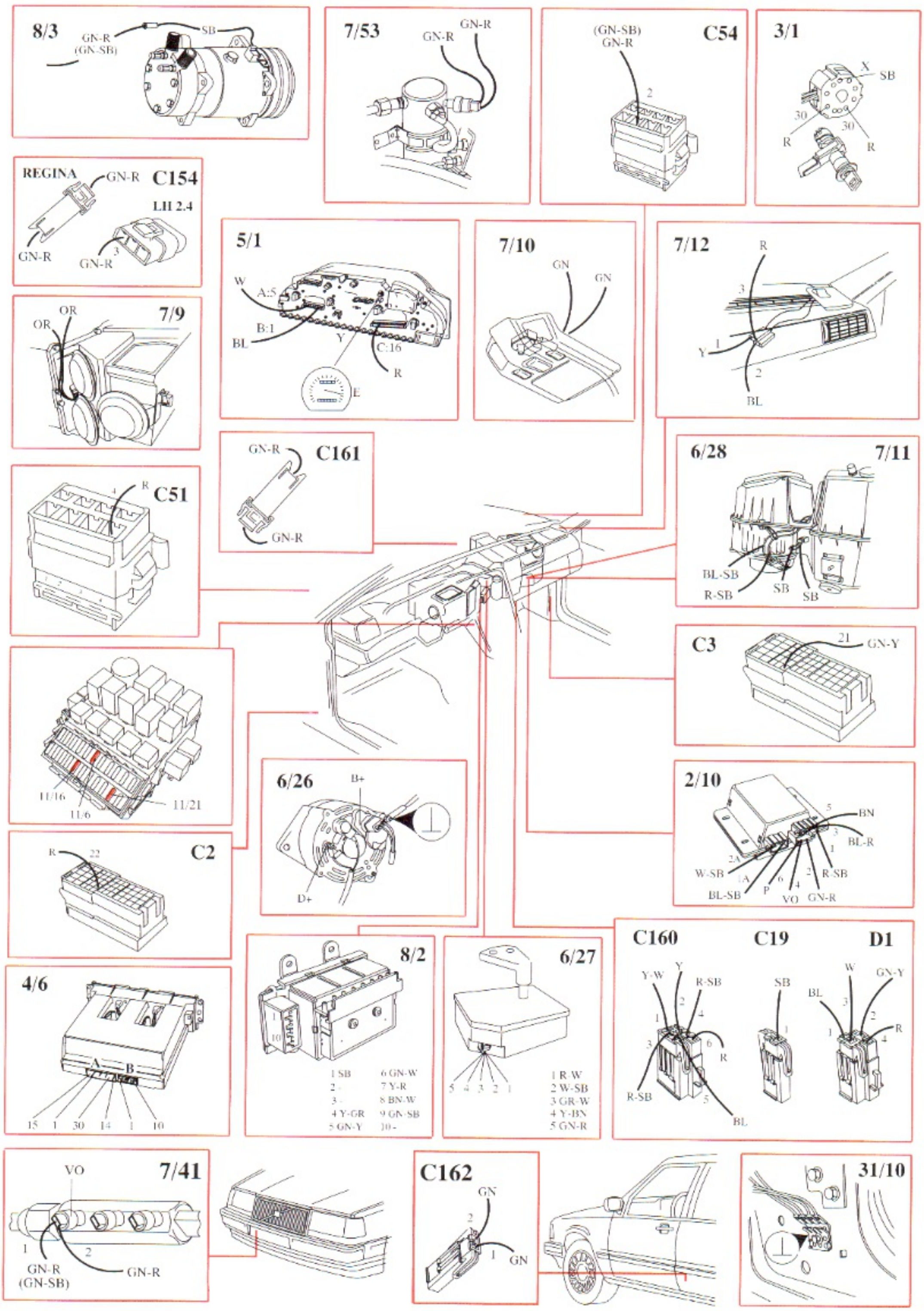
8/3
GN-R
(GN-SB)
SB
7/53
GN-R
GN-R
(GN-SB)
GN-R
C54
2
3/1
X
SB
30
30
R
R
REGINA
GN-R
C154
LH 2.4
GN-R
GN-R
3
5/1
W
A:5
B:1
BL
Y
C:16
R
E
7/10
GN
GN
7/12
R
3
Y
1
2
BL
7/9
OR
OR
C161
GN-R
GN-R
6/28
7/11
BL-SB
R-SB
SB
SB
C51
R
C3
21
GN-Y
11/16
11/6
11/21
6/26
B+
D+
2/10
5
BN
3
BL-R
1
2A
W-SB
1A
P
6
4
VO
2
R-SB
BL-SB
GN-R
C2
R
22
C160
C19
D1
Y-W
Y
R-SB
2
4
1
3
6
R
R-SB
5
BL
SB
1
BL
W
GN-Y
3
2
1
R
4
4/6
A
B
15
1
30
14
1
10
8/2
1
10
1 SB
2 -
3 -
4 Y-GR
5 GN-Y
6 GN-W
7 Y-R
8 BN-W
9 GN-SB
10 -
6/27
5 4 3 2 1
1 R-W
2 W-SB
3 GR-W
4 Y-BN
5 GN-R
7/41
VO
1
2
GN-R
(GN-SB)
GN-R
C162
GN
2
1
GN
31/10

Exhaust temperature sensor (Japan)

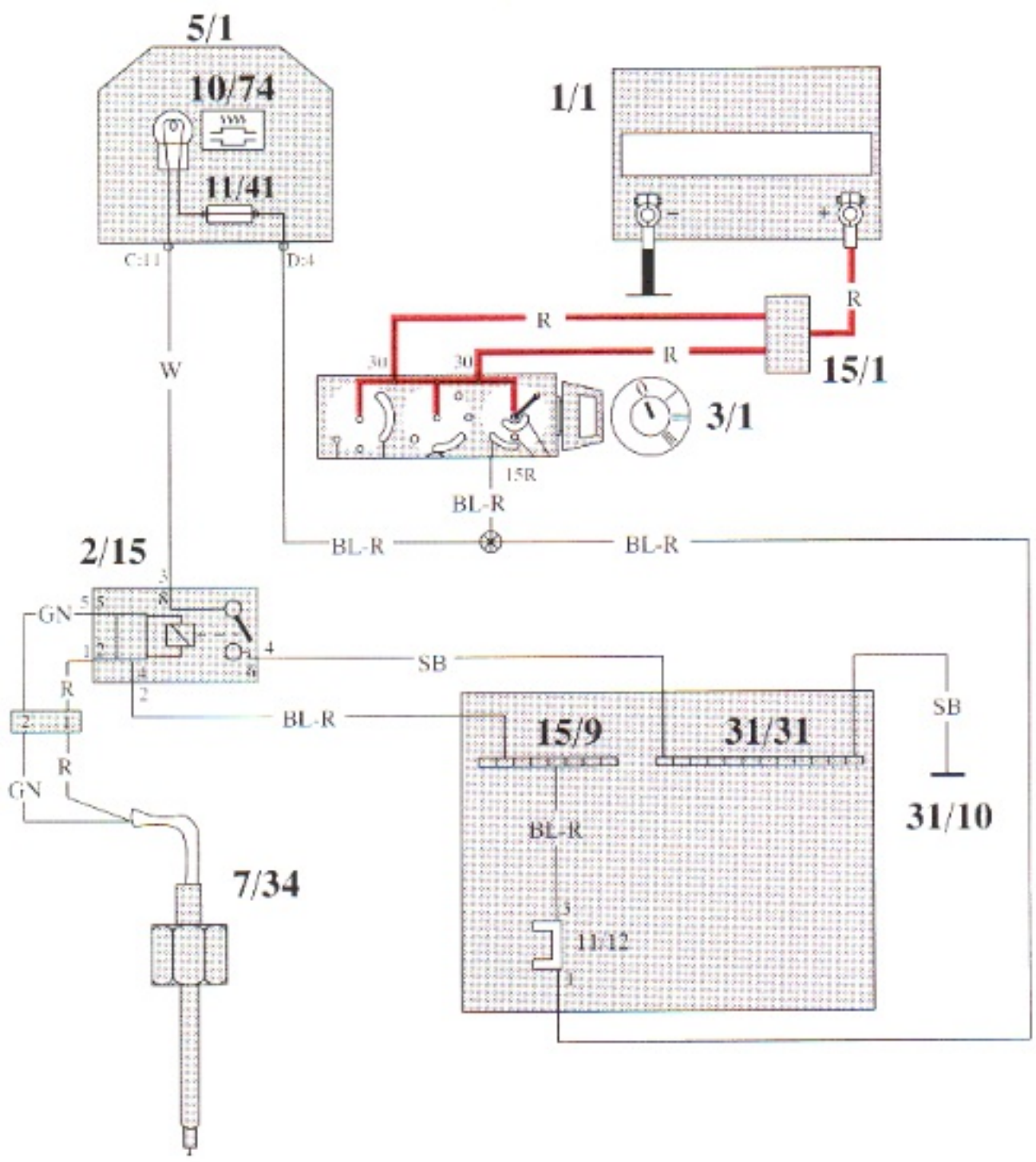

Exhaust gas temperature
below 850°C

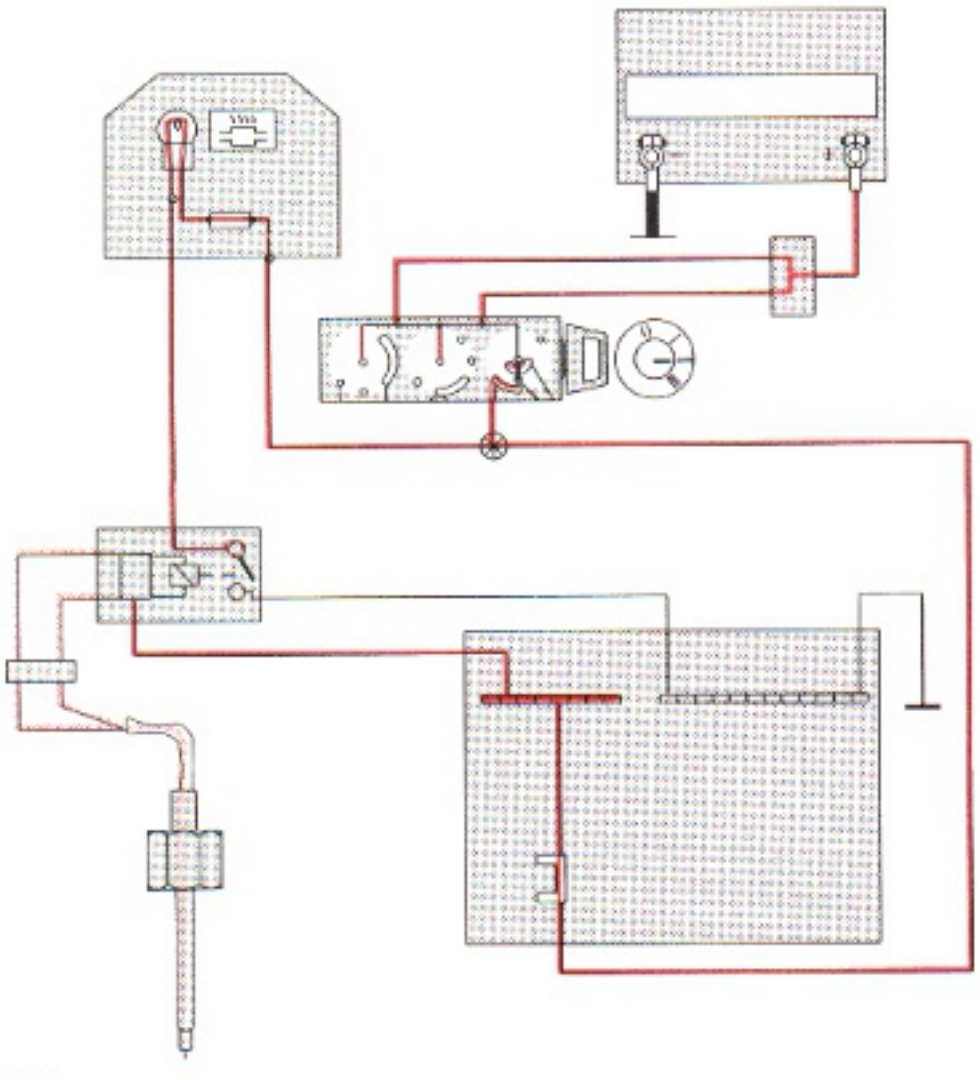

Exhaust gas temperature
above 850°C

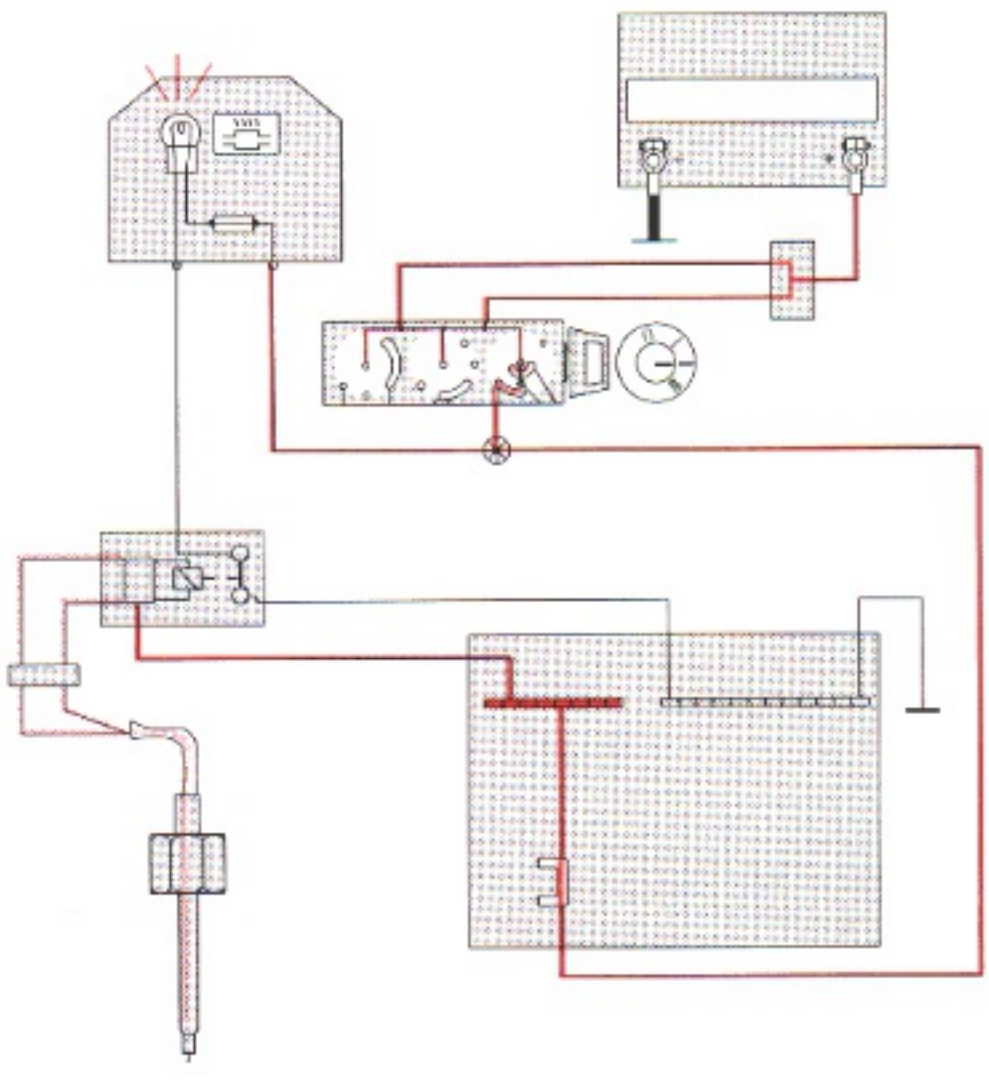

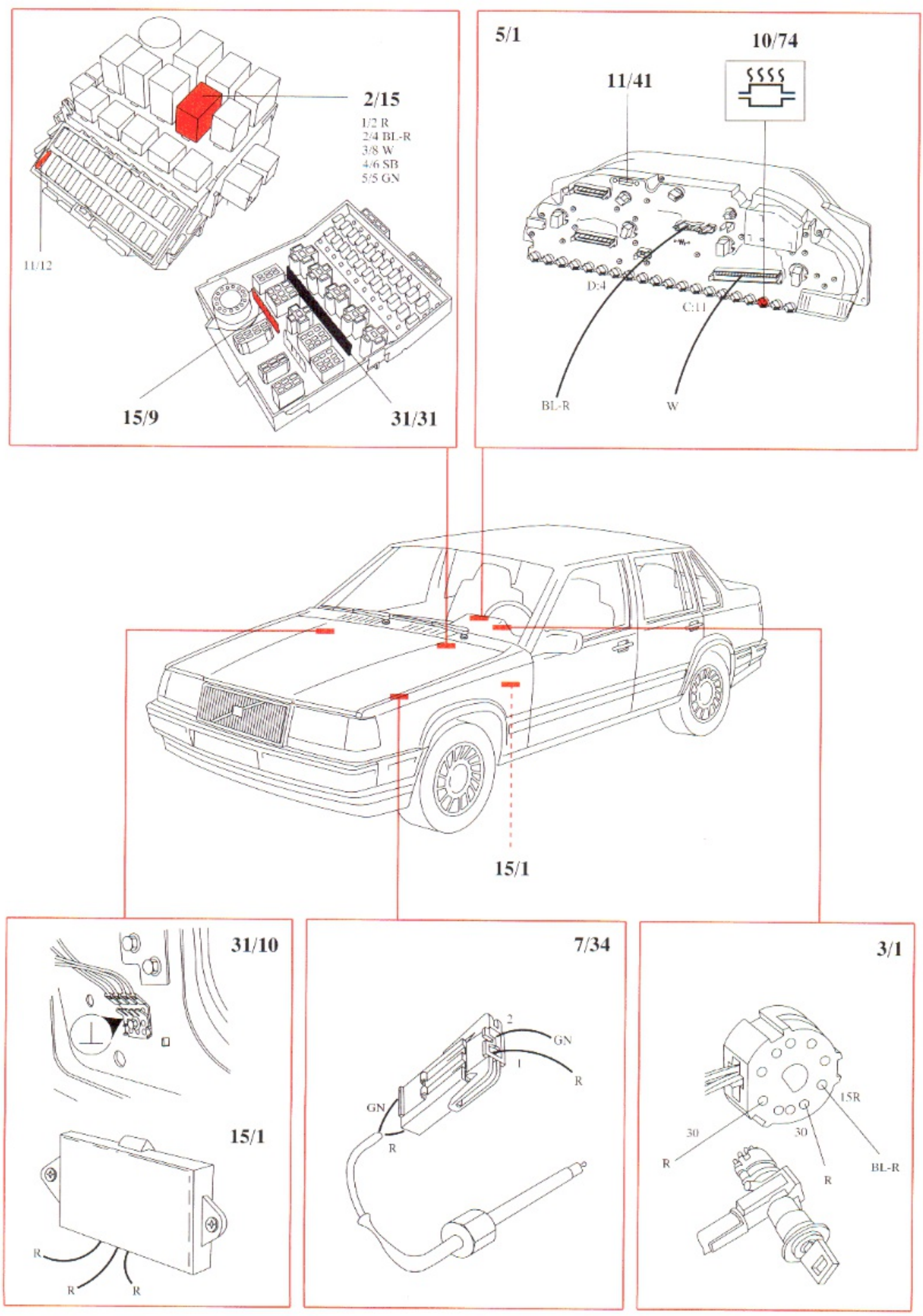
2/15
1/2 R
2/4 BL-R
3/8 W
4/6 SB
5/5 GN
11/12
15/9
31/31
5/1
10/74
11/41
D:4
C:11
BL-R
W
15/1
31/10
15/1
R
R
R
7/34
2
GN
1
R
GN
R
3/1
15R
30
30
R
R
BL-R

SRS Supplemental Restraint System (airbag)

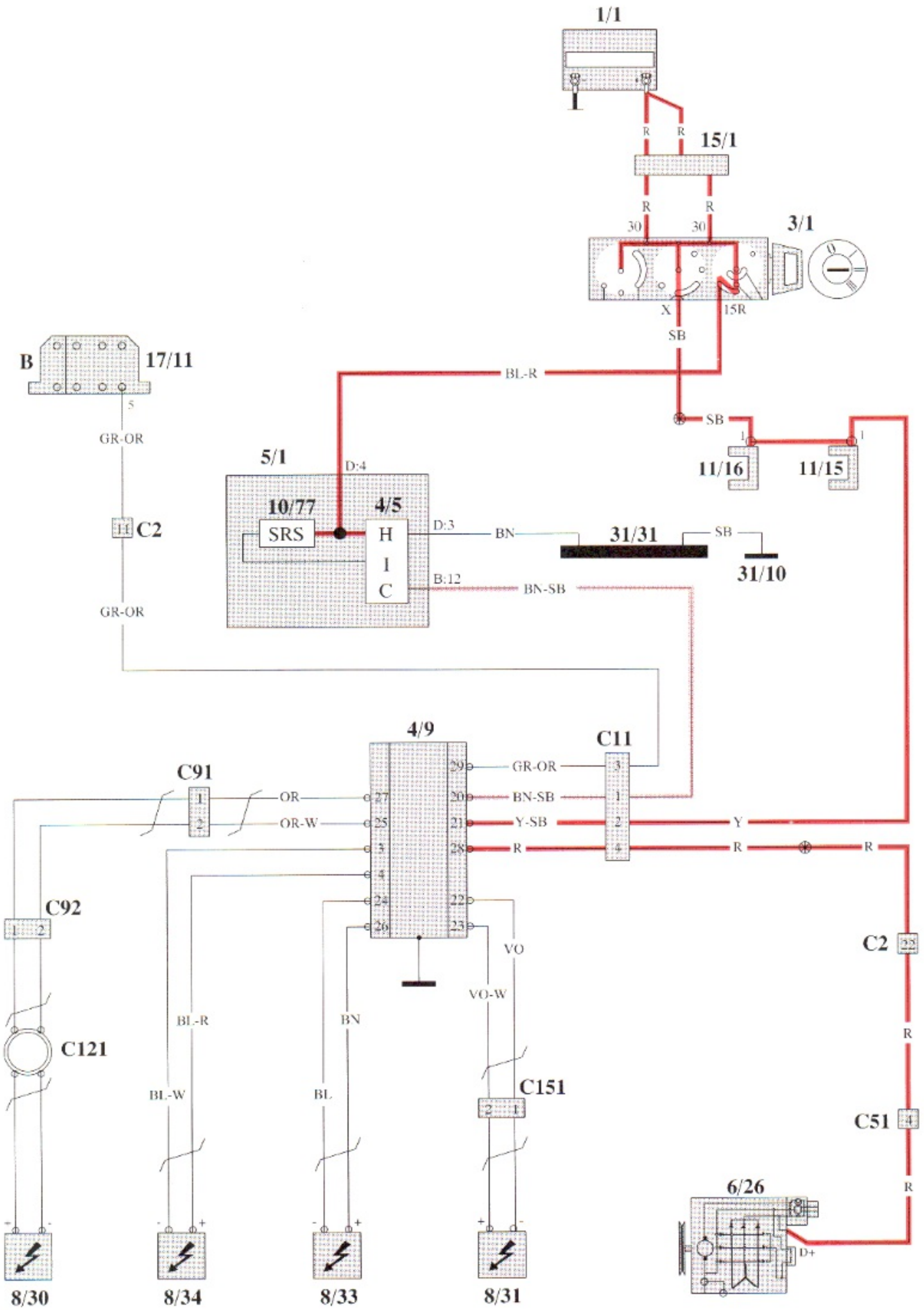

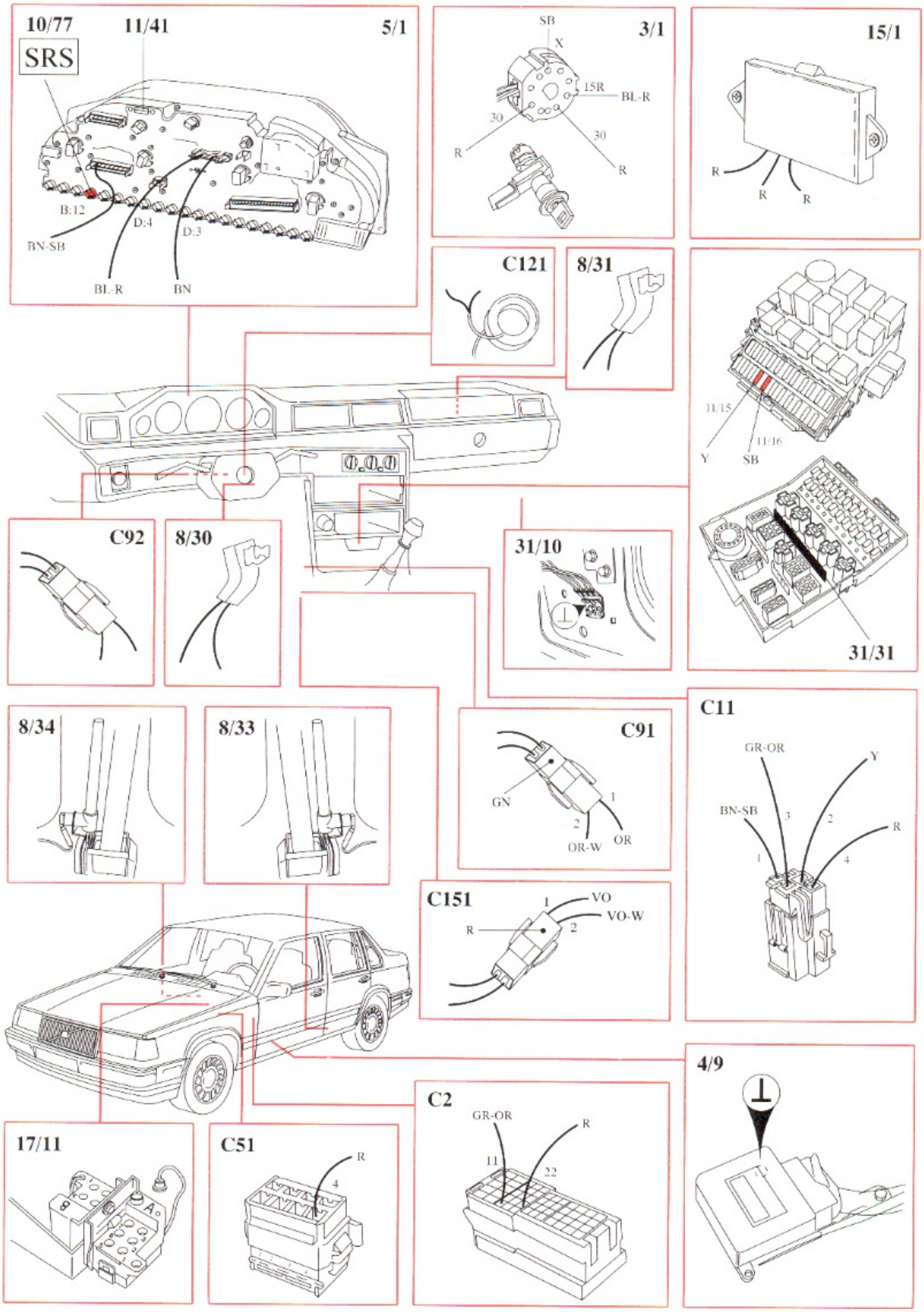
10/77
11/41
5/1
SRS
B:12
D:4
D:3
BN-SB
BL-R
BN
3/1
SB
X
15R
BL-R
30
30
R
R
15/1
R
R
R
C121
8/31
11/15
11/16
Y
SB
31/31
C92
8/30
31/10
8/34
8/33
C91
GN
1
2
OR-W
OR
C11
GR-OR
Y
BN-SB
3
2
R
1
4
C151
1
VO
VO-W
R
2
4/9
17/11
C51
R
4
C2
GR-OR
R
11
22

SRS Supplemental Restraint System (airbag) USA, Canada

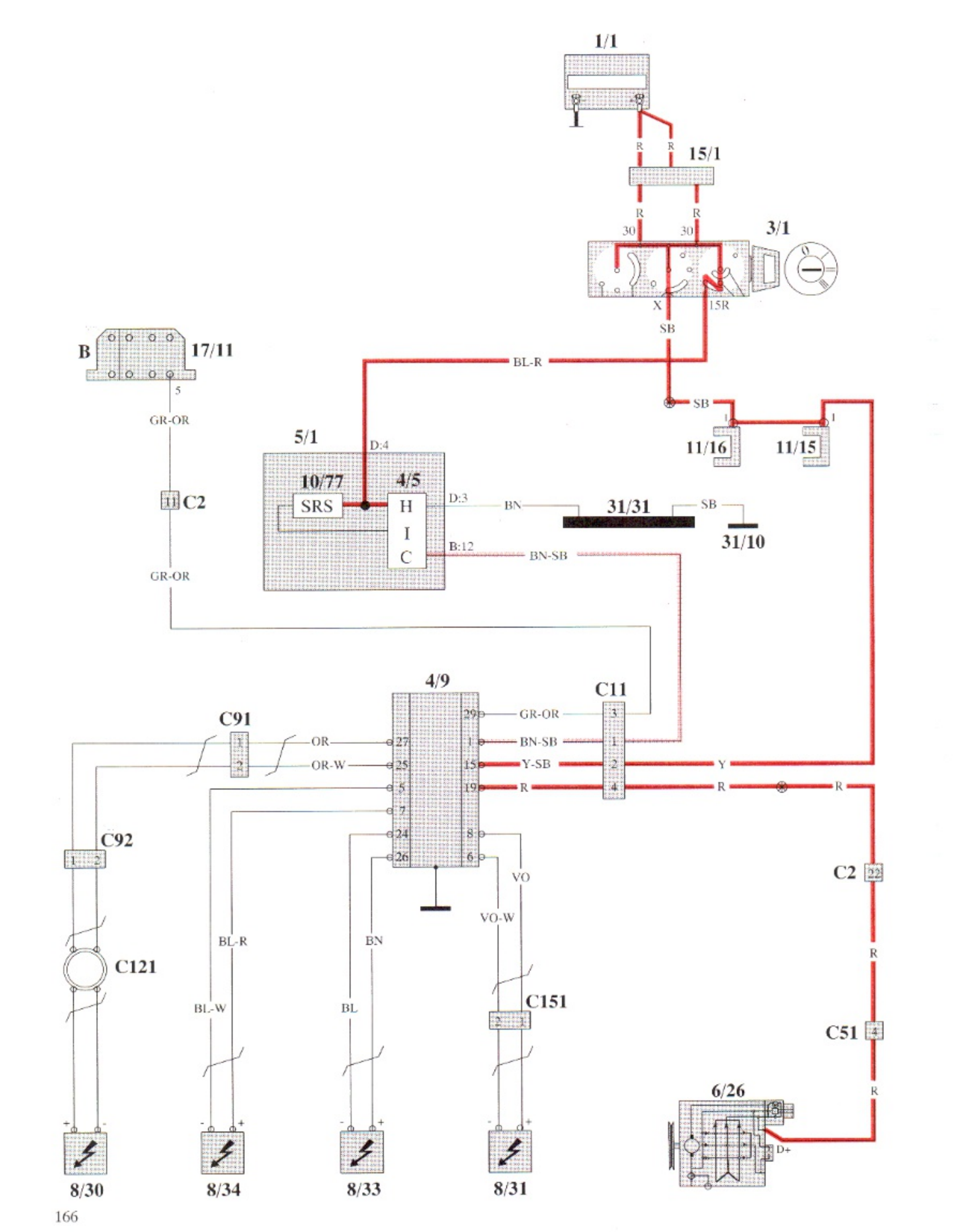

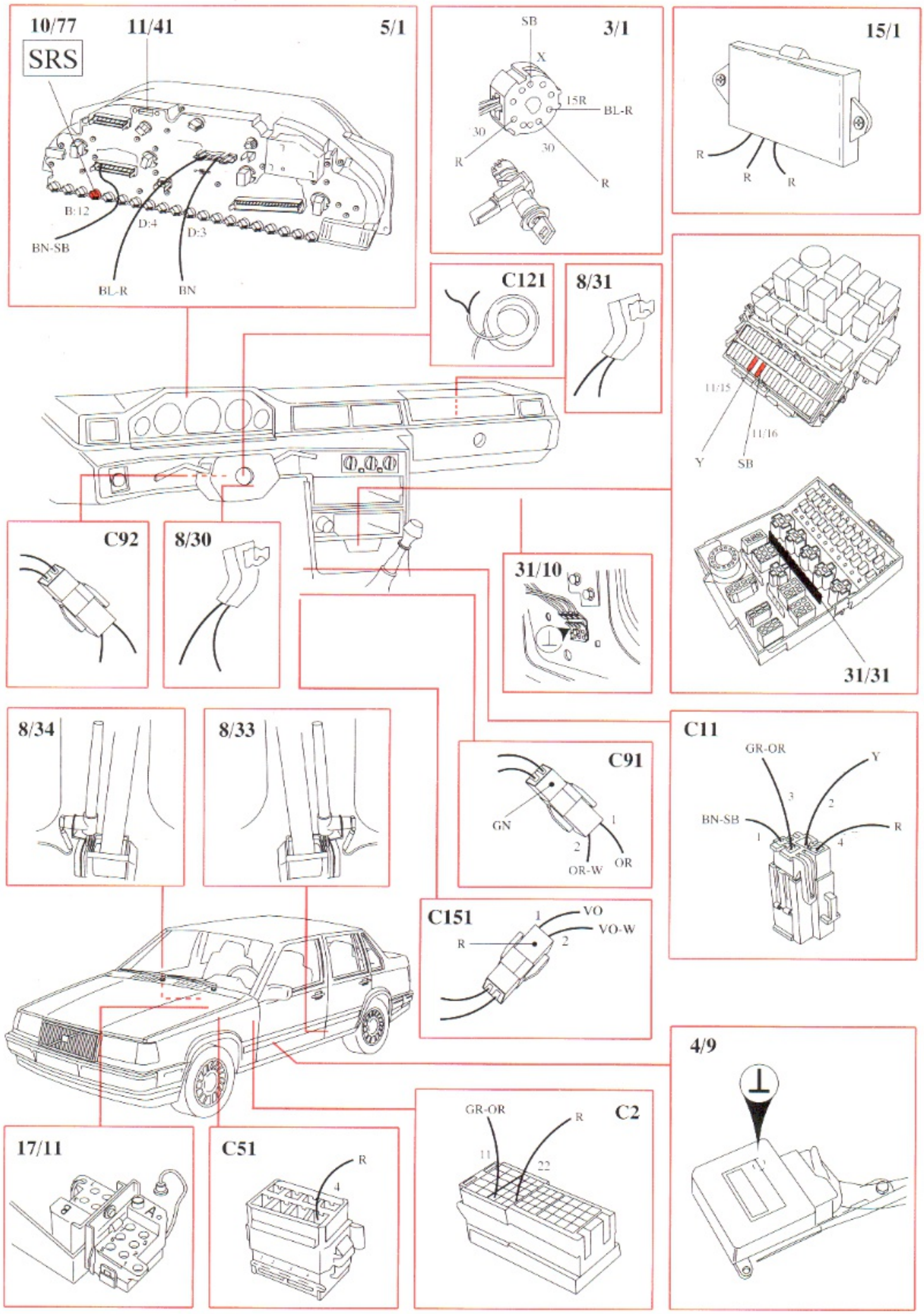
10/77
11/41
5/1
SRS
B:12
D:4
D:3
BN-SB
BL-R
BN
SB
3/1
X
15R
BL-R
30
30
R
R
15/1
R
R
R
C121
8/31
11/15
11/16
Y
SB
31/31
C92
8/30
31/10
8/34
8/33
C91
GN
1
2
OR-W
OR
C11
GR-OR
Y
3
2
BN-SB
R
1
4
C151
1
VO
VO-W
R
2
4/9
17/11
C51
R
4
C2
GR-OR
R
11
22

List of components

1/1	Battery
2/2	Relay, front foglights
2/3	Regulator DIM-DIP
2/4	Intermittent relay, windshield wipers
2/5	Relay, seat belt reminder/ignition key warning
2/6	Bypass relay 15I
2/7	Central locking relay
2/8	Overdrive relay
2/10	Power unit ECC
2/11	Relay, engine cooling fan
2/12	Relay, radio interference suppression
2/13	Relay, fuel injection (MFI)
2/14	Relay, glowplug mechanism
2/15	Relay, exhaust gas temperature sensor
2/16	Tailgate intermittent wiper relay
2/23	Relay, fuel injection
2/34	Relay, front foglights
2/36	Headlight flasher
2/37	Headlight relay
2/38	Timer relay, exhaust gas recirculation (EGR)
2/45	Relay, P-shift lock
2/50	Bypass relay, high beam
3/1	Ignition lock
3/2	Light switch
3/4	Cruise control operation
3/5	Switch, turn signal/high-low beam
3/6	Switch, hazard warning flashers
3/7	Foglight switch
3/8-1	Switch, heated rear window
3/8-2	Switch with timer relay, heated rear window/door mirrors
3/9	Brake light switch
3/10	Backup (reversing) light switch
3/12	Switch, windshield wash/wipe
3/13	Switch, tailgate wash/wipe
3/14	Switch, lock button
3/15	Power window switch, driver's door for driver's door
3/16	Power window switch, driver's door for driver's side rear door
3/17	Power window switch, driver's door for passenger's side front
3/18	Power window switch, driver's door for passenger's side rear
3/19	Power window switch, driver's side rear
3/20	Power window switch, passenger's side front
3/21	Power window switch, passenger's side rear
3/22	Switch for rear power window lifts
3/23	Switch for power door mirror, driver's side
3/24	Switch for power door mirror, passenger's side
3/25	Switch for power sunroof
3/26	Operating module, driver's seat
3/27	Operating module, passenger's seat
3/28	Switch for heated driver's seat
3/29	Switch for heated passenger's seat
3/31	Door switch, driver's door
3/32	Door switch, passenger's side front
3/33	Door switch, driver's side rear
3/34	Door switch, passenger's side rear
3/35	Door switch, tailgate (5-door estate)
3/36	Switch, glove compartment
3/37	Horn contacts
3/38	Switch, brake pedal
3/39	Switch, clutch pedal
3/40	Start inhibit switch, automatic transmission
3/42-1	Switch on transmission
3/42-2	Oil pressure sensor, kick-down valve
3/43	Switch in gear lever
3/44	Seat belt lock, driver's seat
3/47	Parking brake switch
3/50	Throttle position (TP) switch
3/52	Switch for power antenna
3/59	Beam width control
3/66	Idle air control (IAC) control, EGR
3/70	Rheostat setting
3/78	Lock unit, tailgate
4/1	Overheating protector, driver's seat
4/2	Overheating protector, passenger's seat
4/3	Control module, cruise control
4/4	Rheostat
4/5	Safety circuit, SRS (airbag)
4/6	Control module, ECC
4/9	Sensor module, SRS (airbag)
4/10	Control module EZ-K (DI) system
4/15	Power amplifier, EZ-K (DI) system
4/16	Control module ABS
4/23	Control module LH-jetronic 2.4 (MFI) system
4/25	Control module Regina (MFI) system
4/26	Power amplifier/ignition coil REX-I (DI) system
4/29	Control module driver's seat
4/40	A/C controls, MCC
4/42	Control module REX-I (DI) system
4/43	Heater controls
5/1	Combined instrument
5/3	Ambient temperature sensor
6/1	Windshield wiper motor
6/2	Washer motor, front
6/3	Right headlight wiper motor
6/4	Left headlight wiper motor
6/5	Central locking motor, passenger's side front
6/6	Central locking motor, passenger's side rear
6/7	Central locking motor, driver's side rear
6/8	Central locking motor, tailgate
6/9	Window lift motor driver's door
6/10	Window lift motor driver's side rear
6/11	Window lift motor passenger's side front
6/12	Window lift motor passenger's side rear
6/13	Power door mirror, driver's side
6/14	Power door mirror, passenger's side
6/15	Motor, power sunroof
6/16	Motor, driver's seat backrest
6/17	Motor, up-down, front edge of driver's seat
6/18	Motor, up-down, rear edge of driver's seat
6/19	Motor, fore-aft, driver's seat
6/24	Vacuum pump, cruise control
6/25	Starter motor
6/26	Generator
6/27	Servo motor, throttle control
6/28	Cabin fan motor
6/29	Engine cooling fan
6/30	Washer motor, tailgate
6/31	Fuel pump
6/32	Tailgate wiper motor
6/33-1	Fuel level sensor/primer pump
6/33-2	Fuel level sensor/pump
6/34	Power antenna
6/35	Parking heater
6/36	Central locking motor, driver's side front
6/38	Actuator, left
6/39	Actuator, right
7/4	Brake fluid level sensor
7/5	Washer fluid level sensor
7/6	Oil pressure sensor
7/7	Engine coolant temperature (ECT) sensor
7/9	Engine coolant temperature (ECT) sensor, ECC
7/10	Cabin temperature sensor
7/11	Ambient temperature sensor
7/12	Solar sensor
7/14	Thermostat, engine cooling fan
7/15	Heated oxygen sensor (HO2S)
7/16	Engine coolant temperature (ECT) sensor, fuel/ignition (MFI/DI) system

7/17	Mass air flow (MAF) sensor
7/24	Knock sensor (KS)
7/25	Engine speed (RPM) sensor
7/26	Pressure sensor, EGR
7/28	Engine coolant temperature (ECT) sensor, diesel
7/30	Pressure sensor for charge pressure, turbodiesel
7/31	Sensor, ABS left front
7/32	Sensor, ABS right front
7/33	Sensor, vehicle speed (VSS) and ABS
7/34	Thermoelement, three-way catalytic converter (TWC)
7/37	Temperature sensor, EGR
7/38	Low-speed pressure sensor, engine cooling fan
7/40	High-speed pressure sensor, engine cooling fan
7/41	High-pressure sensor, A/C
7/43	Thermostat, driver's seat
7/44	Thermostat, passenger's seat
7/47	PTC-resistor, air pre-heating
7/50	Pressure sensor, intake manifold
7/52	Temperature sensor, intake air
7/53	Low-pressure sensor, A/C
7/69	Ambient temperature sensor
7/75	Bulb malfunction indicator
8/1	Operating solenoid, overdrive
8/2	Solenoids, ECC
8/3	Solenoid coupling, A/C
8/5	Idle air control (IAC) valve
8/6-9	Injection valves
8/13	Fuel valve, diesel
8/15	Hydraulic unit, ABS
8/17	Converter, EGR
8/24	3-way valve, EGR
8/30	Steering wheel module, SRS (airbag)
8/33	Igniter for left seat belt tensioner
8/34	Igniter for right seat belt tensioner
8/36	Solenoid P-shift lock
8/42	Solenoid, pulsed secondary air injection (PAIR)
9/1	Cigar lighter
9/2	Heated rear window
9/3	Heater element, driver's seat backrest
9/4	Heater element, passenger's seat backrest
9/5	Heater element, driver's seat cushion
9/6	Heater element, passenger's seat cushion
10/5	Left front foglight
10/6	Right front foglight
10/11	Left front parking light
10/12	Right front parking light
10/13	Left front turn signal
10/14	Right front turn signal
10/15	Left turn signal repeater (not USA/CDN)
10/16	Right turn signal repeater (not USA/CDN)
10/19	Extra brake light
10/20	Left number plate light
10/21	Right number plate light
10/22	Roof light
10/24	Trunk light
10/25	Roof light, load area (5-door)
10/29	Glove compartment light
10/30	Door-open warning light, driver's door
10/31	Door-open warning light, front passenger's side
10/32	Door-open warning light, rear driver's side
10/33	Door-open warning light, rear passenger's side
10/36	Control panel lighting
10/38	Ashtray lighting, rear
10/39	Switch lighting, seat heater
10/40	Gear selector lighting
10/43	Right brake light
10/44	Right parking light, rear
10/45	Right parking/tail light
10/46	Right rear foglight
10/47	Bulb, right rear turn signal
10/48	Right backup (reversing) light
10/50	Left brake light
10/51	Left parking light, rear
10/52	Left parking/tail light
10/53	Left rear foglight
10/54	Bulb, left rear turn signal
10/55	Left backup (reversing) light
10/64	Right high beam
10/65	Right extra high beam
10/66	Right low beam
10/68	Left high beam
10/69	Left extra high beam
10/70	Left low beam
10/72	Ashtray lighting, front
10/74	Indicator light, exhaust gas temperature
10/75	Indicator light, charge pressure, turbodiesel
10/76	Indicator light, diesel preheating
10/77	Indicator light, SRS (airbag)
10/78	Indicator light, seat belt
10/79	Indicator light, overdrive (auto.)/Gear selection indicator
10/80	Indicator light, overdrive (man.)
10/82	Indicator light, ABS
10/83	Indicator light, parking brake
10/84	Indicator light, brake warning
10/85	Indicator light, high beam
10/86	Indicator light, oil pressure
10/87	Indicator light, charge
10/88	Indicator light, bulb failure
10/89	Indicator light, rear foglights
10/90	Indicator light, washer fluid level
10/91	Service indicator
10/92	Indicator light, trailer
10/93	Indicator light, malfunction indicator lamp (MIL)
10/94	Indicator light, right turn signal
10/95	Indicator light, left turn signal
10/96	Instrument lighting
10/103	Switch lighting, heated rear window/door mirrors
10/104	Switch lighting
10/114	Vanity mirror lighting, passenger's side
10/115	Vanity mirror lighting, driver's side
11/1-26	Fuses
11/41	Fuse, combined instrument
15/1	Positive terminal
15/2	30-rail in el. distribution unit
15/9	Fuse-protected 15-rail in el. distribution unit
16/1	Radio
16/2	Amplifier
16/3	Loudspeaker, right front door
16/4	Loudspeaker, left front door
16/5	Loudspeaker, right rear door
16/6	Loudspeaker, left rear door
16/7	Loudspeaker, instrument panel, right side
16/8	Loudspeaker, instrument panel, left side
16/9	Antenna
16/10	Horn 1
16/11	Horn 2
16/15	CD-autochanger
16/17	Loudspeaker, rear parcel shelf, left side/left D-post
16/18	Loudspeaker, rear parcel shelf, right side/right D-post

The component list continues on the next page

17/1	Service data link connector for starter motor operation
17/11	OBD data link connector
17/14	Data link connector for diagnosis of power seat
18/1	Bridge connector 1
18/2	Bridge connector 2
19/1	Engine coolant temperature (ECT) gauge
19/2	Rev. counter (RPM gauge)
19/3	Speedometer
19/4	Clock
19/5	Fuel gauge
20/1	Ignition coil
20/2	Distributor
20/3-6	Spark plugs
	Glowplugs
5	Series resistance
8	Cabin fan resistor
	Ground connector right front wing
	Ground connector left front wing
	Ground connector body (ground connection, battery-body)
	Ground connector engine (ground connection, battery-engine)
	Ground connector for heated rear window (4-door)
	Ground connector left A-post
	Ground connector at parking brake lever
0	Ground connector right A-post
1	Ground connector left tail light
2	Ground connector right tail light
3	Ground connector in load area
6	Ground connector at windshield wiper motor
7	Ground connector at power sunroof motor
6	Ground connector, generator
8	Ground connector at overdrive solenoid
1	Ground connection rail in el. distribution unit
2	Ground connector on engine (power ground)
3	Ground connector on engine (signal ground)
0	Ground connector on engine (diesel)
3	Ground connector at steering column bracket
4	Ground connector engine cooling fan
	Connector, 53-pin Instrument panel harness - Door sill harness
	Connector, 53-pin Instrument panel harness - Left wheel housing harness
	Connector, 53-pin Instrument panel harness - Right wheel housing harness
	Connector, left A-post, 2-pin
	Connector, at el. dist. unit, 4-pin
	Connector, at steering column, 8-pin
	Connector, at centre console, 10-pin
C11	Connector, at el. dist. unit, 4-pin
C12	Connector, at el. dist. unit, 2-pin
C14	Connector, at el. dist. unit, 2-pin
C15	Connector, left A-post, 4-pin
C19	Connector, at instrument panel, 2-pin
C20	Connector, under gear lever carrier, 1-pin or 2-pin
C21	Connector, left B-post, 4-pin
C22	Connector, at tailgate, 6-pin (5-door)
C23	Connector, at tailgate, 2-pin (5-door)
C24	Connector, at extra brake light, 2-pin
C25	Connector, tailgate, 2-pin, (5-door)
C27	Connector, tailgate, 1-pin, (5-door)
C29	Connector, at driver's seat, 4-pin
C31	Connector, at passenger's seat, 2-pin
C32	Connector, at driver's seat, 2-pin
C33	Connector, under driver's seat, 2-pin
C34	Connector, under passenger's seat, 2-pin
C36	Connector, under passenger's seat, 2-pin
C37	Connector, under driver's seat, 2-pin
C39	Connector, at driver's seat, 4-pin
C40	Connector, at passenger's seat, 4-pin
C41	Connector, under driver's seat, 6-pin
C42	Connector, under driver's seat, 2-pin
C50	Connector, 8-pin Left wheel housing harness - Engine harness
C51	Connector, 8-pin Left wheel housing harness - Engine harness
C54	Connector, 8-pin Right wheel housing harness - Engine harness
C55	Connector, 8-pin Right wheel housing harness - Engine harness
C62	Connector, at windshield wiper motor, 4-pin
C63	Connector, at left headlight, 3-pin
C64	Connector, at right headlight, 3-pin
C65	Connector, driver's door, 6-pin
C66	Connector, passenger's door, 6-pin
C72	Connector, driver's door, 2-pin
C73	Connector, passenger's door, 2-pin
C74	Connector, rear door driver's side, 2-pin
C75	Connector, rear door passenger's side, 2-pin
C76	Connector, right A-post, 2-pin
C79	Connector, driver's door, 4-pin
C84	Connector, driver's door, 2-pin
C85	Connector, rear door driver's side, 2-pin
C86	Connector, passenger's door, 2-pin
C87	Connector, rear door passenger's side, 2-pin
C88	Connector, at switch, 5-pin
C89	Connector, at sunroof motor, 2-pin
C91	Connector, at el. dist. unit, 2-pin
C92	Connector, behind steering wheel, 2-pin
C93	Connector, left rear wheel housing, 4-pin
C98	Connector, at power antenna, 4-pin
C100	Connector, left wheel housing, 2-pin
C101	Connector, right wheel housing, 2-pin
C102	Connector, at el. dist. unit, 2-pin
C105	Connector on bridge connector 1, 2-pin
C111	Connector, at thermoelement, 2-pin
C117	Connector, 2-pin Left wheel housing harness - Engine harness
C121	Coupling reel, steering wheel, SRS (airbag)
C123	Connector to bridge connector 2, 2-pin
C132	Connector, 8-pin Left wheel housing harness - Engine harness
C137	Connector, 4-pin Right wheel housing harness - Engine harness
C139	Connector, at gear selector, 4-pin
C143	Connector, at A-post passenger's side, 24-pin
C144	Connector, at A-post driver's side, 24-pin
C149	Connector, at B-post passenger's side, 11-pin
C150	Connector, at B-post driver's side, 11-pin
C154	Connector, 3-pin or 1-pin Right wheel housing harness - engine cooling fan harness
C155	Connector, left A-post, 8-pin
C156	Connector, at firewall, 3-pin
C157	Connector, at el. dist. unit, 4-pin
C158	Connector, at driver's seat, 4-pin
C160	Connector, at instrument panel, 6-pin
C161	Connector, at firewall, 1-pin
C162	Connector, left B-post, 2-pin
C163	Connector, at firewall, 2-pin (diesel)
C166	Connector, at el. dist. unit, 8-pin
C300	Connector, at firewall, 4-pin (for heated oxygen sensor (HO2S))
C301	Connector, at instrument panel for vanity mirror, passenger's side
C302	Connector, at instrument panel for vanity mirror, driver's side
D1	Connector, at instrument panel, 4-pin
D2	Connector, alarm, 8-pin at steering column
D3	Connector, alarm, 4-pin at steering column
D4	Connector, alarm, 2-pin in engine compartment, left front
D5	Connector, towing hook, 10-pin (not USA/CDN)
D7	Connector, ambient temperature sensor, 6-pin

Alphabetical index

ABS brake system 134
Ambient temperature gauge 118
Anti-theft alarm, pre-routed wiring 100
Backup (reversing) lights 68
Beam width control 58
Brake light 64, 66
Bulb malfunction indicator 104, 106, 108
Cabin fan, standard heater 156
Central locking 138
Cigar lighter 96
Combined instrument 114
Component list (foldout) ..... at end of book
Cruise control 30, 32
On-board diagnostic system (OBD) 98
Diesel, pre-heating, overload sensor and EGR (D 24 TIC) 44
Electrical distribution unit, relays, fuses 4, 5, 6, 7
Electronic climate control (ECC) 160
Engine cooling fan 28
Exhaust gas temp. sensor (Japan) 162
Foglights 78, 80
Foglights, rear, USA/Canada 84
Glove compartment and vanity mirror lights 70
Ground connections 20
Headlight wash/wipe 90
Heated driver's/passenger's seat 148, 150
Heated rear window and door mirrors with timer relay 142, 144
High and low beams 46, 48, 50, 54, 56
Horn 88
Ignition system 34, 36, 38
Instrument and panel lights 76
Interior lights 72
LH-jetronic 2.4 (MFI) 22, 24
Luggage compartment light 74
Manual climate control (MCC) 158
Overdrive 128, 130
P-Shift lock, automatic transmission 132
Parking, tail and number plate lights 60, 62
Power door mirrors 146
Power seats 152, 154
Power sunroof 140
Power supply 40
Power windows 136
Pre-routed wiring for alarm 100
Radio connections 120, 122, 124, 126
Reduced intensity (DIM-DIP) Great Britain 52
Regina (MFI) (B 230 F) 26
Seat belt reminder 110, 112
Speedometer and odometer 116
SRS Supplemental Restraint System 164, 166
Starter system 42
Tailgate wash/wipe 94
Towing hook, pre-routed wiring 102
Turn signals - hazard warning lights 86
Windshield wash/wipe 92