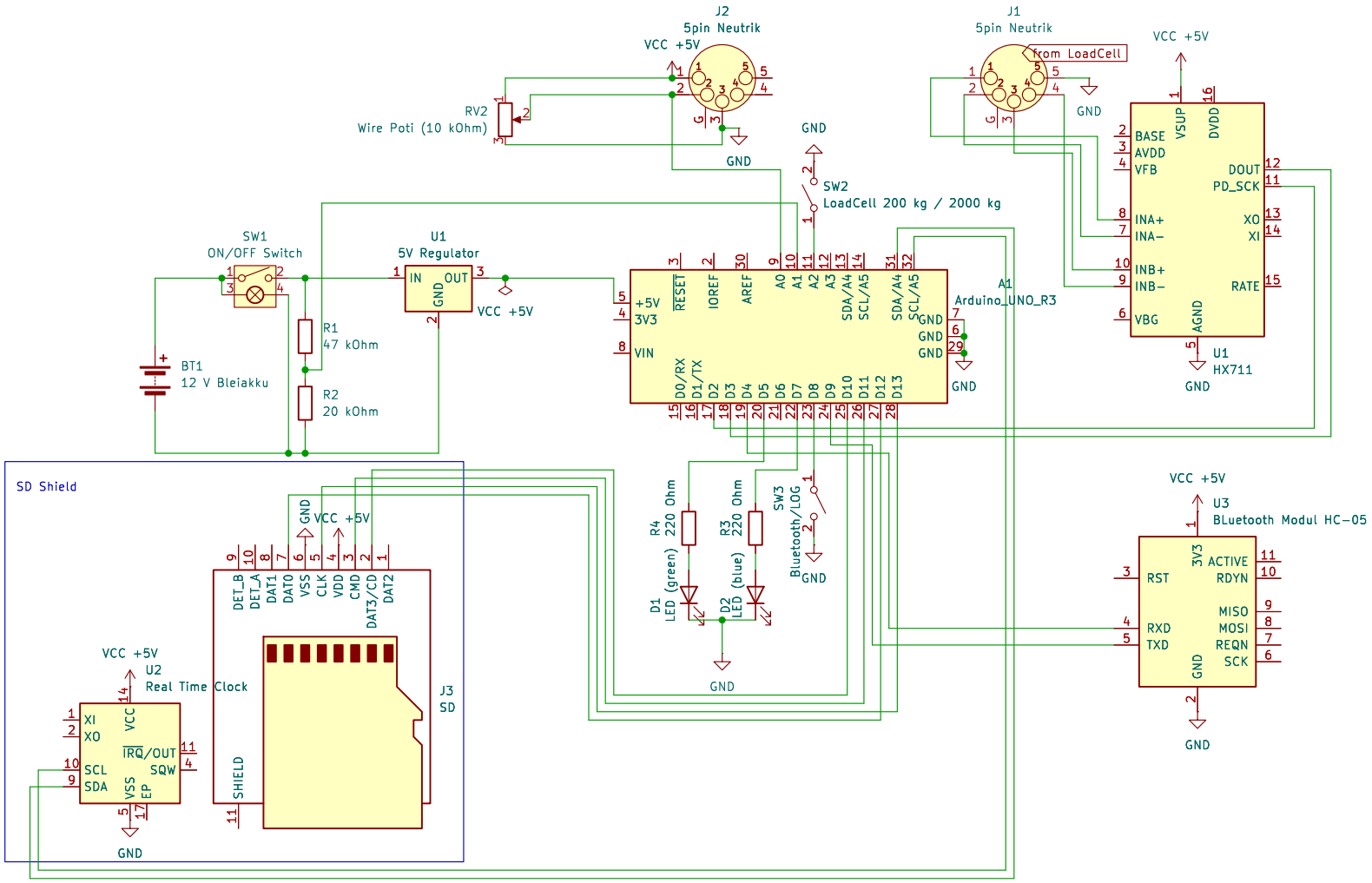

PhiFlip

Sheet: /

File: SchematicDiagram_RootDataLogger.kicad_sch

Title: RootDataLogger

Size: A4	Date: 2025-02-20	Rev:
KiCad E.D.A. 8.0.8		Id: 1/1