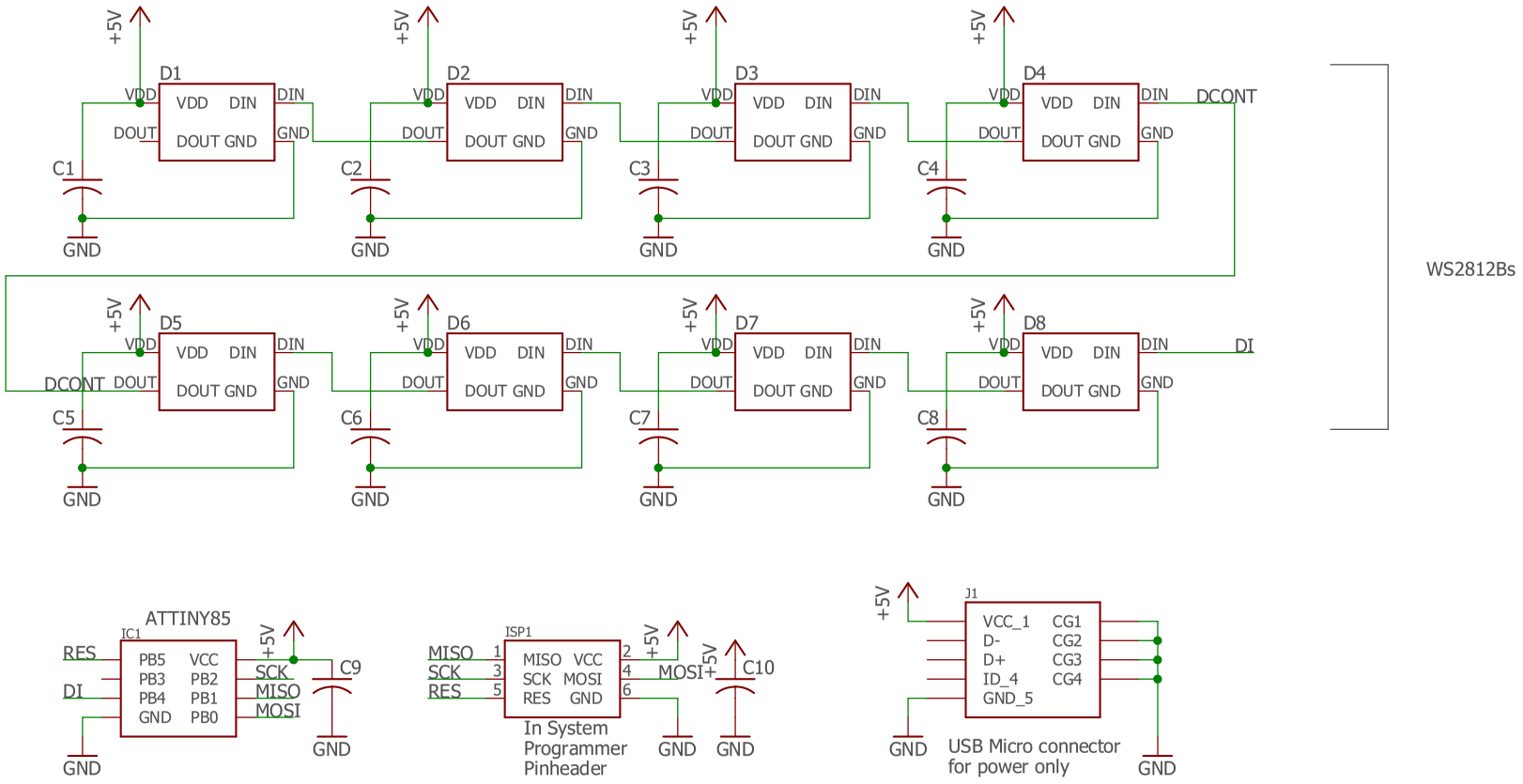

TITLE: ws2812-attiny	
Document Number:	REV:
Date: 1/7/2018 7:56 PM	Sheet: 1/1