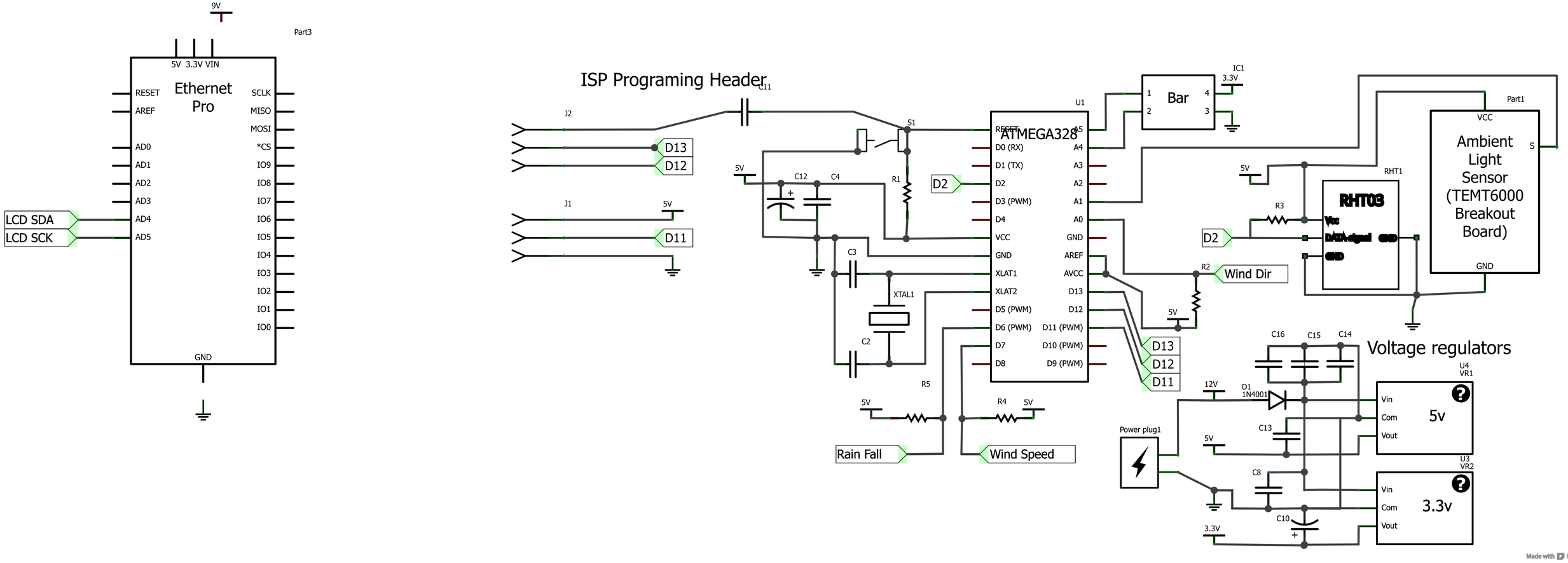
9V
Part3
5V 3.3V VIN
Ethernet Pro
RESET
AREF
AD0
AD1
AD2
AD3
AD4
AD5
SCLK
MISO
MOSI
*CS
IO9
IO8
IO7
IO6
IO5
IO4
IO3
IO2
IO1
IO0
GND
LCD SDA
LCD SCK
ISP Programing Header
J2
J1
C11
D13
D12
D11
5V
C12
C4
C3
XTAL1
C2
S1
R1
D2
R5
R4
Rain Fall
Wind Speed
U1
ATMEGA328
RESET
D0 (RX)
D1 (TX)
D2
D3 (PWM)
D4
VCC
GND
XLAT1
XLAT2
D5 (PWM)
D6 (PWM)
D7
D8
A5
A4
A3
A2
A1
A0
GND
AREF
AVCC
D13
D12
D11 (PWM)
D10 (PWM)
D9 (PWM)
IC1
Bar
3.3V
R3
RHT1
RHT03
Vcc
DATA signal
GND
GND
R2
Wind Dir
Part1
VCC
Ambient Light Sensor (TEMT6000 Breakout Board)
S
GND
C16
C15
C14
Voltage regulators
U4
VR1
5v
Vin
Com
Vout
12V
D1
1N4001
C13
C8
C10
Power plug1
U3
VR2
3.3v
Vin
Com
Vout
3.3V
Made with Fritzing.org