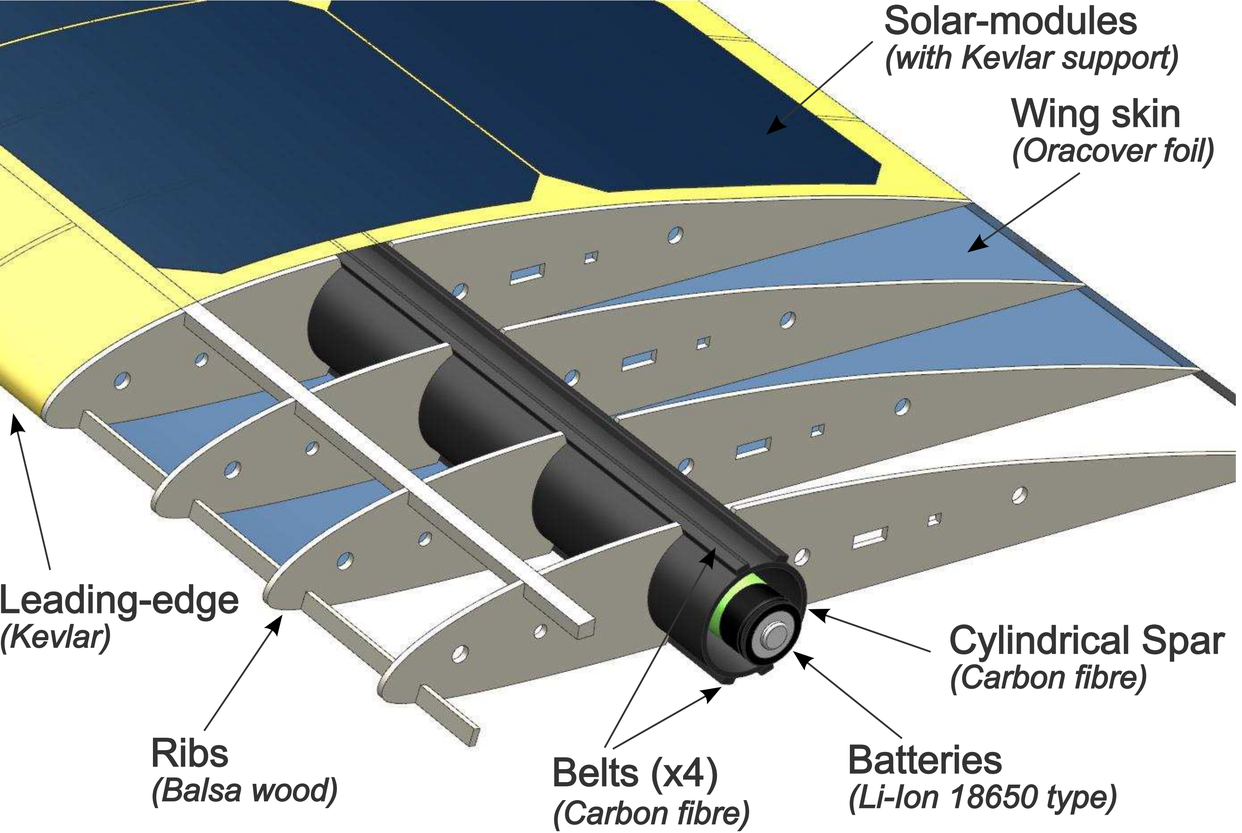
Solar-modules
(with Kevlar support)
Wing skin
(Oracover foil)
Leading-edge
(Kevlar)
Ribs
(Balsa wood)
Belts (x4)
(Carbon fibre)
Batteries
(Li-Ion 18650 type)
Cylindrical Spar
(Carbon fibre)

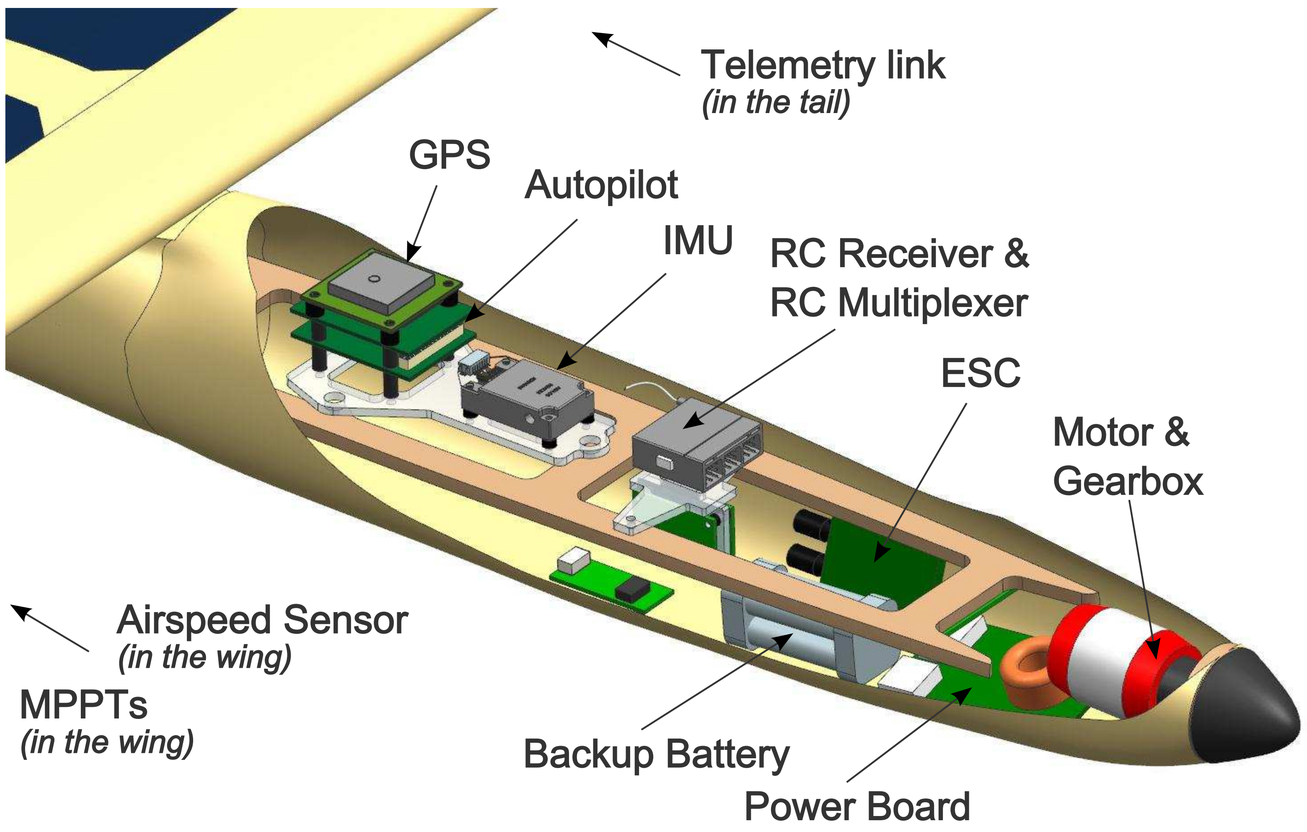
Telemetry link
(in the tail)
GPS
Autopilot
IMU
RC Receiver &
RC Multiplexer
ESC
Motor &
Gearbox
Airspeed Sensor
(in the wing)
MPPTs
(in the wing)
Backup Battery
Power Board