Distributed by:

JAMECO® ELECTRONICS

www.Jameco.com ✦ 1-800-831-4242

The content and copyrights of the attached material are the property of its owner.

Jameco Part Number 878243

FEATURES

* Current transfer ratio
  (CTR : MIN. 50% at I_F = 5mA, V_{CE} = 5V)
* High input-output isolation voltage
  (V_{iso} = 5,000Vrms)
* Response time
  (t_r : TYP. 4μs at V_{CE} = 2V, I_C = 2mA, R_L = 100Ω)
* Dual-in-line package :
  LTV-817 : 1-channel type
  LTV-827 : 2-channel type
  LTV-847 : 4-channel type
* Wide lead spacing package :
  LTV-817M : 1-channel type
  LTV-827M : 2-channel type
  LTV-847M : 4-channel type
* Surface mounting package :
  LTV-817S : 1-channel type
  LTV-827S : 2-channel type
  LTV-847S : 4-channel type
* Tape and reel packaging :
  LTV-817S-TA1, LTV-827S-TA1
* UL approved (No. E113898)
* TUV approved (No. R9653630)
* CSA approved (No. CA91533-1)
* FIMKO approved (No. 202634)
* NEMKO approved (No. P98101945)
* DEMKO approved (No. 307857)
* SEMKO approved (No. 0109172 / 01-03)
* VDE approved (No. 40015248)
* BSI approved (No. 8701) \
* RoHS compliance
* ◇ Critical characteristic
* ○ Safety or compliance characteristic.

OUTLINE DIMENSIONS

LTV-817 :

TYPE I (INK MARK)

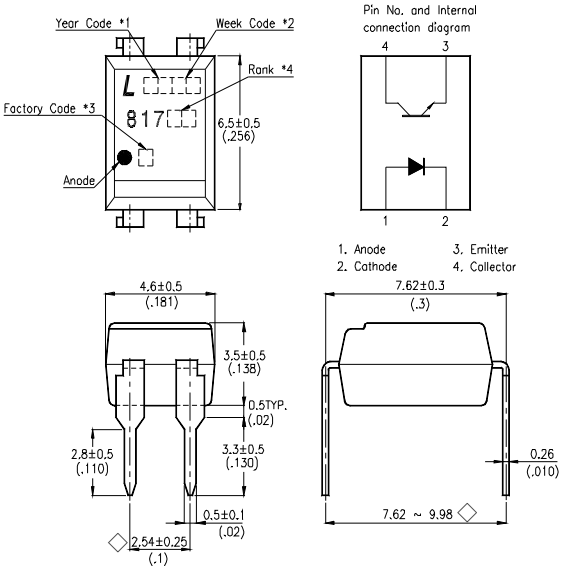

TYPE II (LASER MARK)

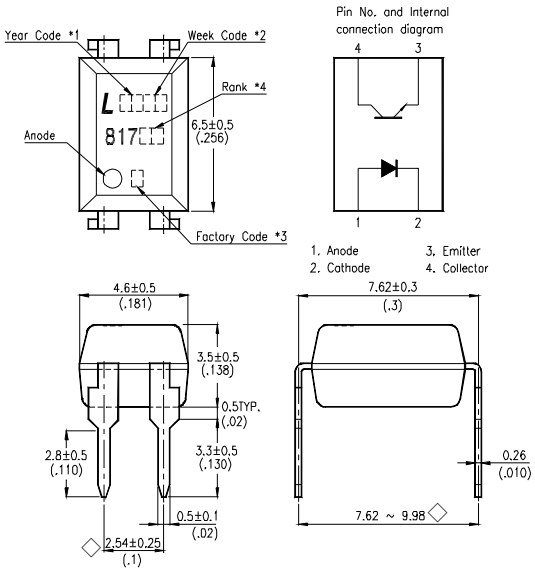

LTV-827 :

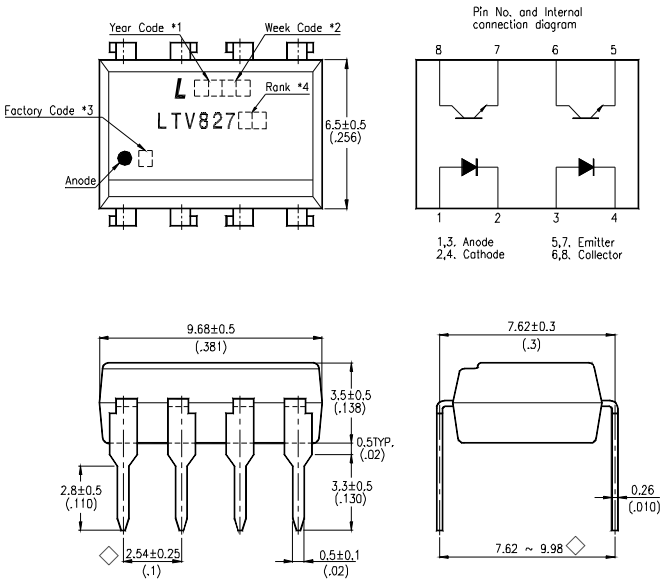

*1. Year date code.
*2. 2-digit work week.
*3. Factory identification mark shall be marked (Z : Taiwan, Y : Thailand, X : China).
*4. Rank shall be or shall not be marked.

OUTLINE DIMENSIONS

LTV-847 :

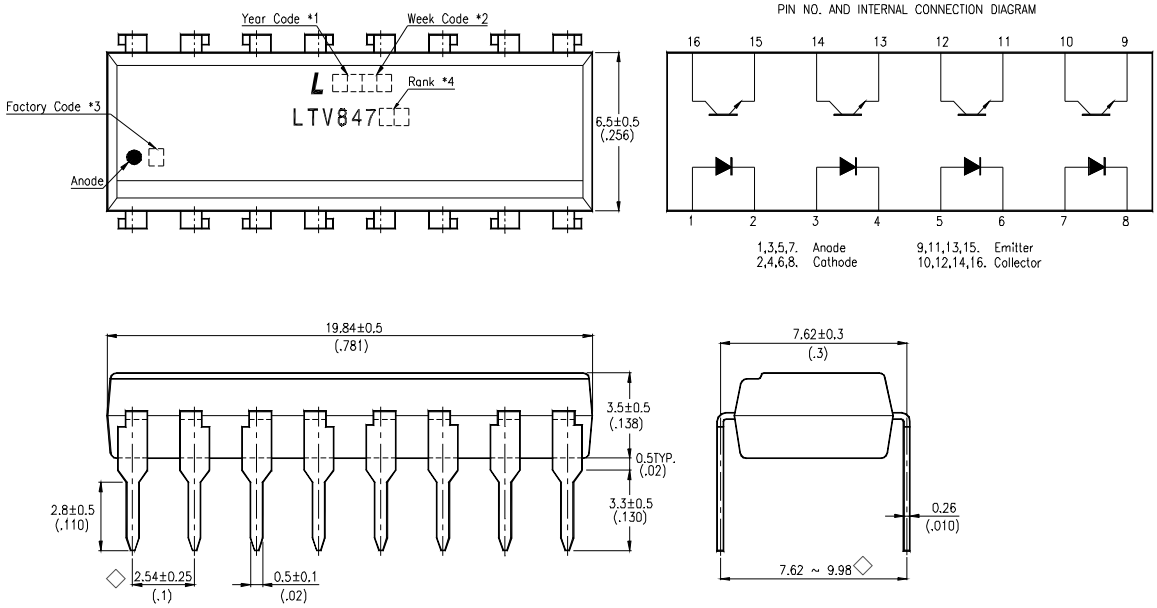

LTV-817M :

TYPE I (INK MARK)

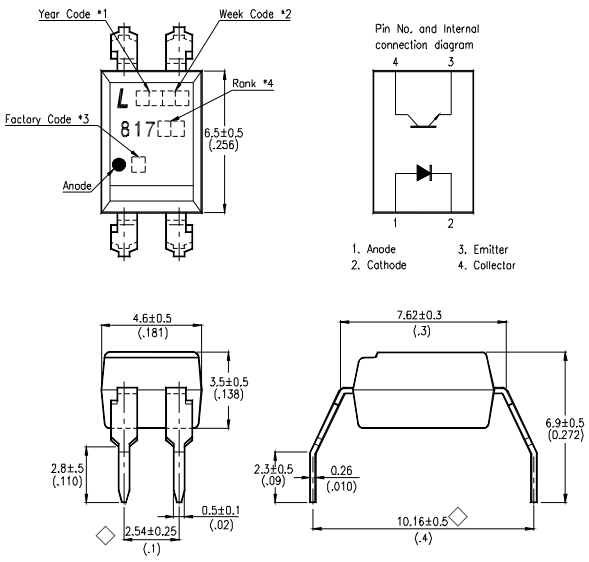

TYPE II (LASER MARK)

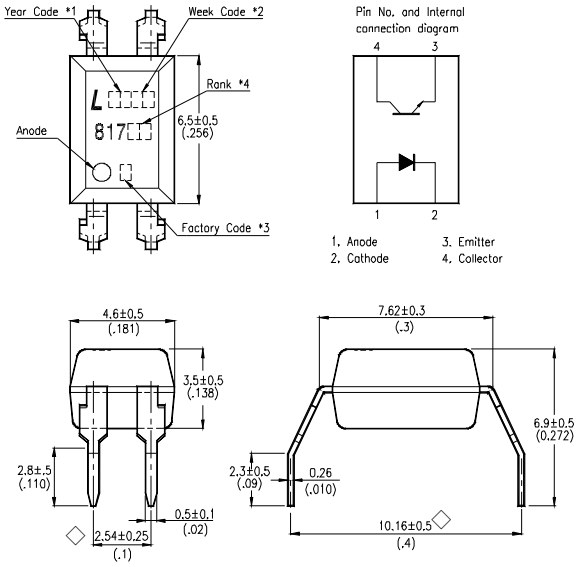

*1. Year date code.
*2. 2-digit work week.
*3. Factory identification mark shall be marked (Z : Taiwan, Y : Thailand, X : China).
*4. Rank shall be or shall not be marked.

OUTLINE DIMENSIONS

LTV-827M :

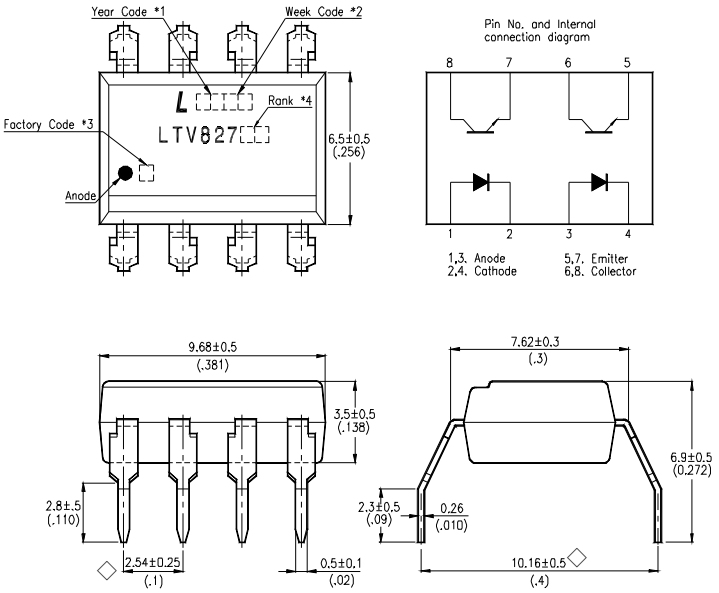

LTV-847M :

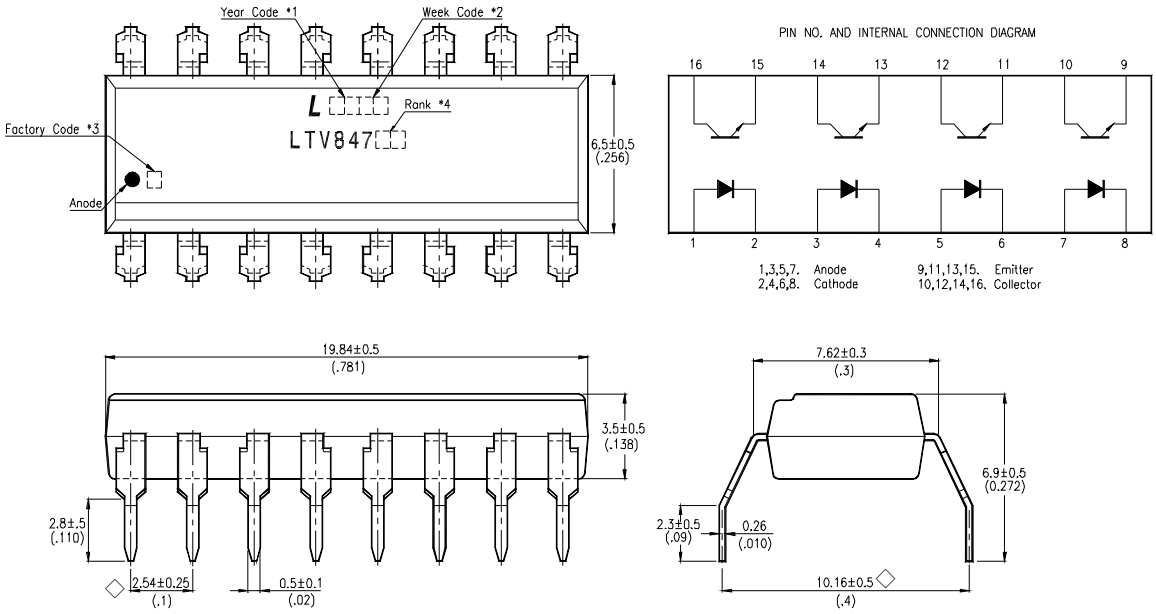

*1. Year date code.
*2. 2-digit work week.
*3. Factory identification mark shall be marked (Z : Taiwan, Y : Thailand, X : China).
*4. Rank shall be or shall not be marked.

OUTLINE DIMENSIONS

LTV-817S :

TYPE I (INK MARK)

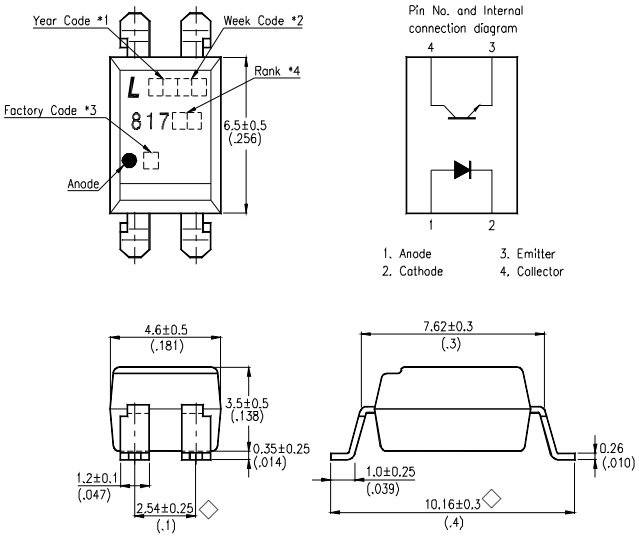

TYPE II (LASER MARK)

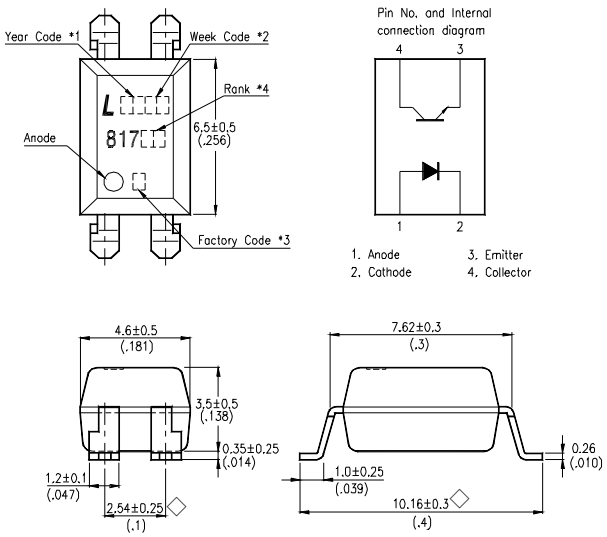

LTV-827S :

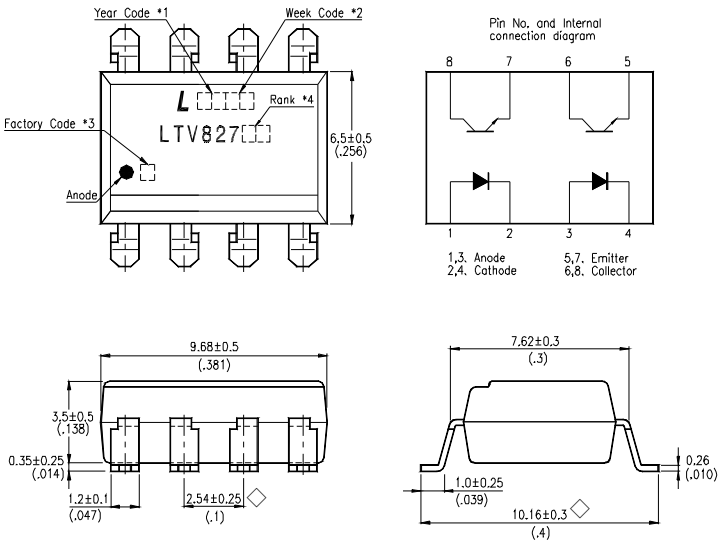

*1. Year date code.
*2. 2-digit work week.
*3. Factory identification mark shall be marked (Z : Taiwan, Y : Thailand, X : China).
*4. Rank shall be or shall not be marked.

OUTLINE DIMENSIONS

LTV-847S :

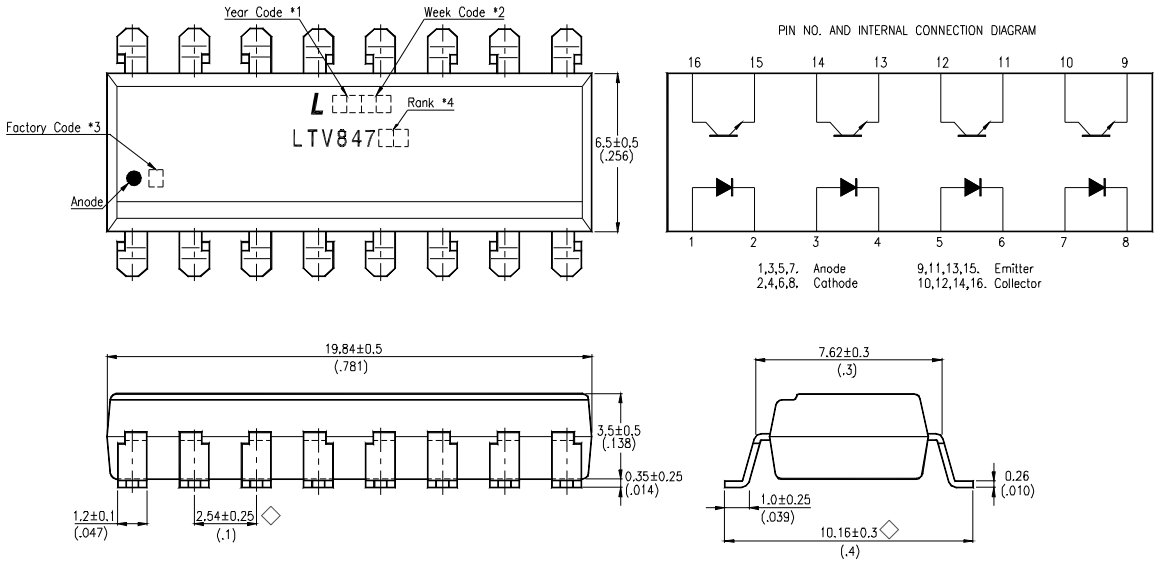

*1. Year date code.
*2. 2-digit work week.
*3. Factory identification mark shall be marked (Z : Taiwan, Y : Thailand, X : China).
*4. Rank shall be or shall not be marked.

TAPING DIMENSIONS

LTV-817S-TA1 :

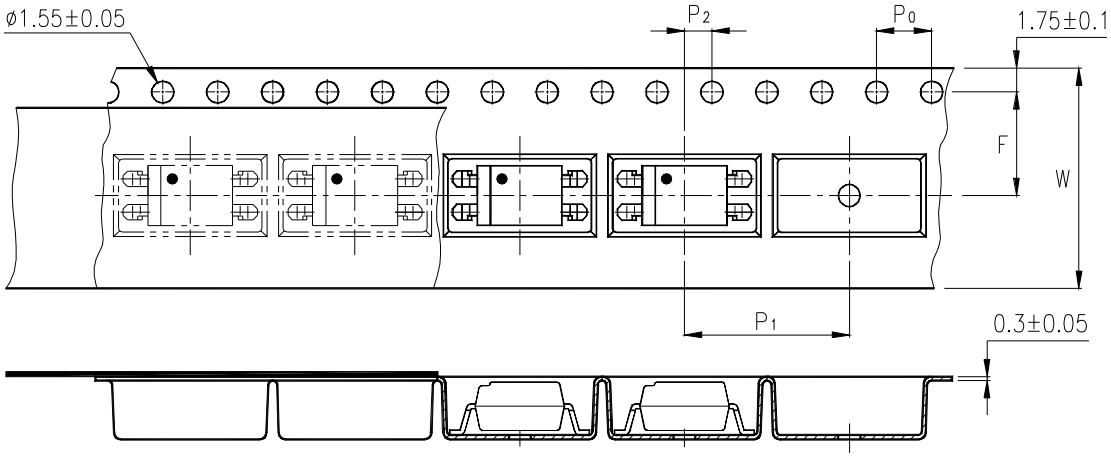

LTV-827S-TA1 :

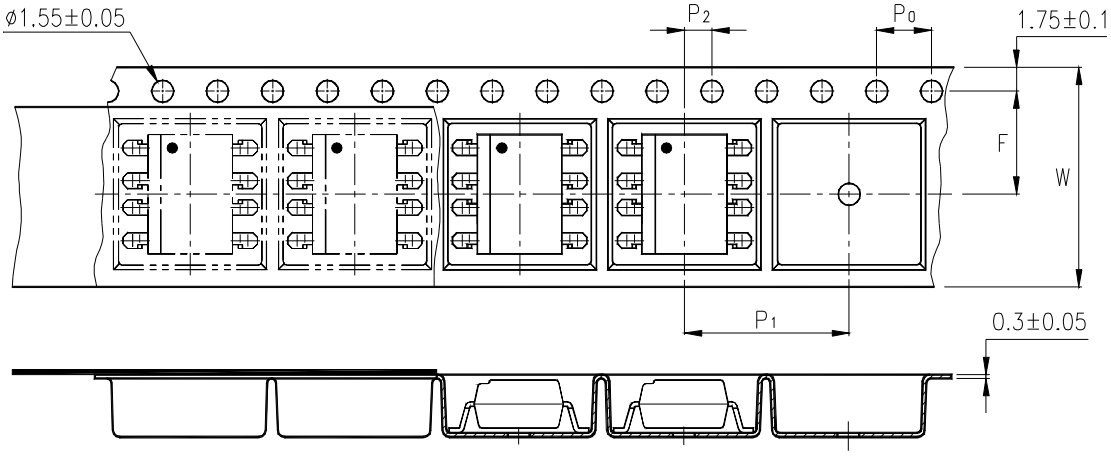

Description	Symbol	Dimensions in mm (inches)
Tape wide	W	16 ± 0.3 (.63)
Pitch of sprocket holes	P_0	4 ± 0.1 (.15)
Distance of compartment	F P_2	7.5 ± 0.1 (.295) 2 ± 0.1 (.079)
Distance of compartment to compartment	P_1	12 ± 0.1 (.472)

ABSOLUTE MAXIMUM RATING

(Ta = 25°C)

PARAMETER		SYMBOL	RATING	UNIT
INPUT	Forward Current	I_F	50	mA
	Reverse Voltage	V_R	6	V
	Power Dissipation	P	70	mW
OUTPUT	Collector - Emitter Voltage	V_{CEO}	35	V
	Emitter - Collector Voltage	V_{ECO}	6	V
	Collector Current	I_C	50	mA
	Collector Power Dissipation	P_C	150	mW
Total Power Dissipation		P_{tot}	200	mW
*1 Isolation Voltage ◯		V_{iso}	5,000	Vrms
Operating Temperature（LTV- 827 / 847）		T_{opr}	-30 ~ +100	°C
Operating Temperature （LTV-817）		T_{opr}	-30 ~ +110	°C
Storage Temperature		T_{stg}	-55 ~ +125	°C
*2 Soldering Temperature		T_{sol}	260	°C

*1. AC For 1 Minute, R.H. = 40 ~ 60%

Isolation voltage shall be measured using the following method.

(1) Short between anode and cathode on the primary side and between collector and emitter on the secondary side.

(2) The isolation voltage tester with zero-cross circuit shall be used.

(3) The waveform of applied voltage shall be a sine wave.

*2. For 10 Seconds

ELECTRICAL - OPTICAL CHARACTERISTICS

(Ta = 25°C)

PARAMETER		SYMBOL	MIN.	TYP.	MAX.	UNIT	CONDITIONS
INPUT	Forward Voltage	V_F	—	1.2	1.4	V	I_F=20mA
	Reverse Current	I_R	—	—	10	μA	V_R=4V
	Terminal Capacitance	C_t	—	30	250	pF	V=0, f=1KHz
OUTPUT	Collector Dark Current	I_{CEO}	—	—	100	nA	V_{CE}=20V, I_F=0
	Collector-Emitter Breakdown Voltage	BV_{CEO}	35	—	—	V	I_C=0.1mA I_F=0
	Emitter-Collector Breakdown Voltage	BV_{ECO}	6	—	—	V	I_E=10μA I_F=0
TRANSFER CHARACTERISTICS	Collector Current	I_C	2.5	—	30	mA	I_F=5mA V_{CE}=5V
	*1 Current Transfer Ratio ◇	CTR	50	—	600	%	
	Collector-Emitter Saturation Voltage	$V_{CE(sat)}$	—	0.1	0.2	V	I_F=20mA I_C=1mA
	Isolation Resistance	R_{iso}	5×10^{10}	1×10^{11}	—	Ω	DC500V 40 ~ 60% R.H.
	Floating Capacitance	C_f	—	0.6	1	pF	V=0, f=1MHz
	Cut-Off Frequency	f_c	—	80	—	kHz	V_{CE}=5V, I_C=2mA R_L=100Ω, -3dB
	Response Time (Rise)	t_r	—	4	18	μs	V_{CE}=2V, I_C=2mA R_L=100Ω
	Response Time (Fall)	t_f	—	3	18	μs	

*1 $CTR = \frac{I_C}{I_F} \times 100\%$

RANK TABLE OF CURRENT TRANSFER RATIO CTR

MODEL NO.	RANK MARK	CTR (%)
LTV-817	L	50 ~ 100
	A	80 ~ 160
	B	130 ~ 260
	C	200 ~ 400
	D	300 ~ 600
	L or A or B or C or D	50 ~ 600
LTV-827 LTV-847	B	130 ~ 260
	B or C or BC	130 ~ 400
	C	200 ~ 400
	C or D or CD	200 ~ 600
	B、BC、C、CD or No mark	50 ~ 600

CONDITIONS	I_F = 5 mA V_{CE} = 5 V Ta = 25 °C

CHARACTERISTICS CURVES

Fig.1 Forword Current vs. Ambient Temperatute

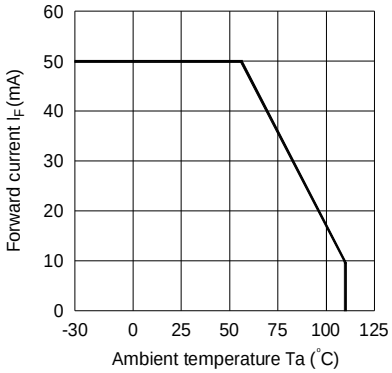

Fig.2 Collector Power Dissiption vs. Ambient Temperature

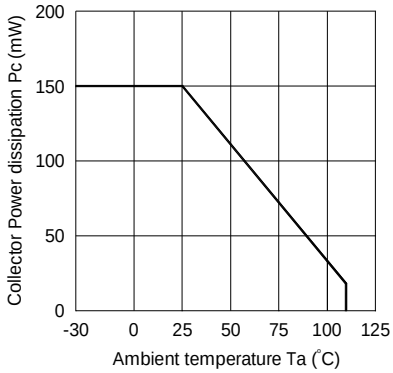

Fig.3 Collector-emitter Saturation Voltage vs. Forward Current

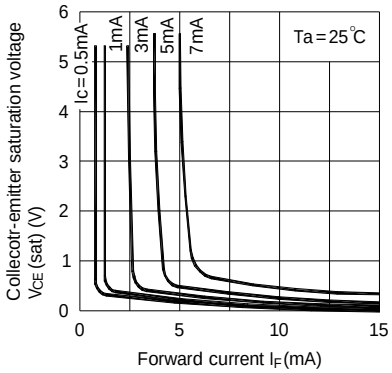

Fig.4 Forward Current vs. Forward Voltage

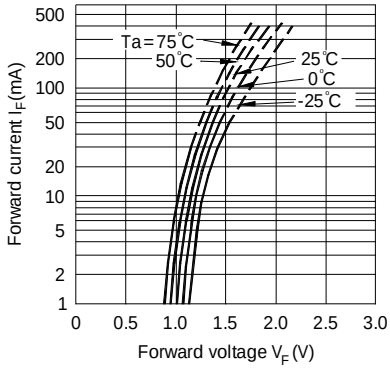

Fig.5 Current Transfer Ratio vs. Forward Current

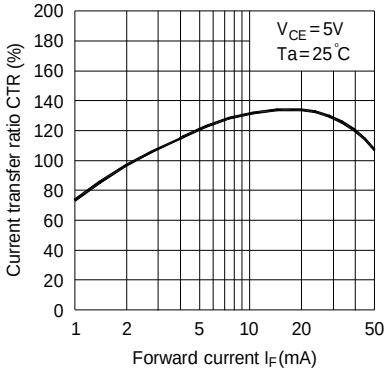

Fig.6 Collector Current vs. Collector-emitter Voltage

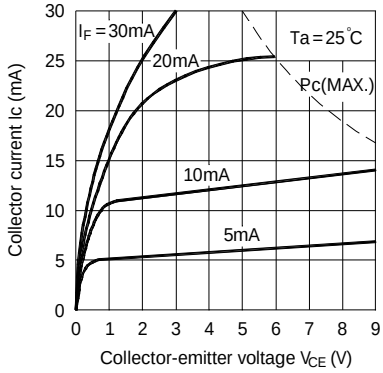

CHARACTERISTICS CURVES

Fig.7 Relative Current Transfer Ratio vs. Ambient Temperature

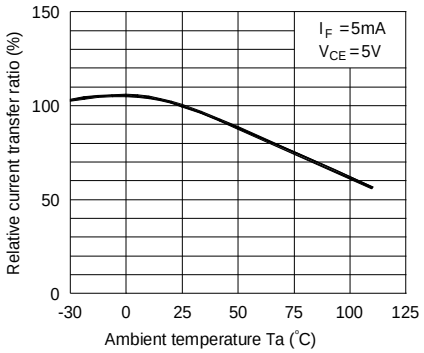

Fig.8 Collector-emitter Saturation Voltage vs. Ambient Temperature

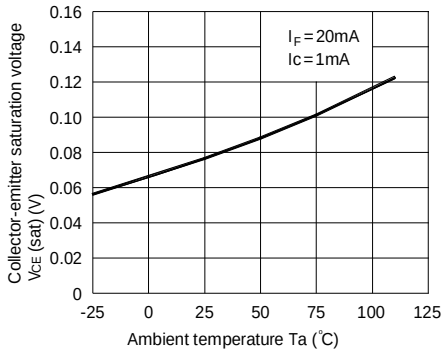

Fig.9 Collector Dark Current vs. Ambient Temperature

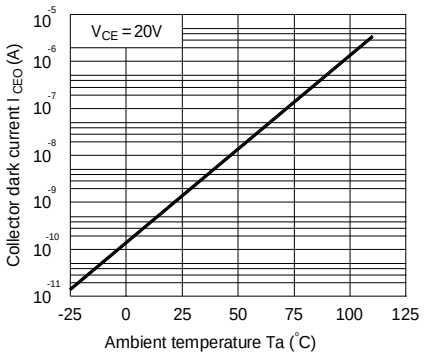

Fig.10 Response Time vs. Load Resistance

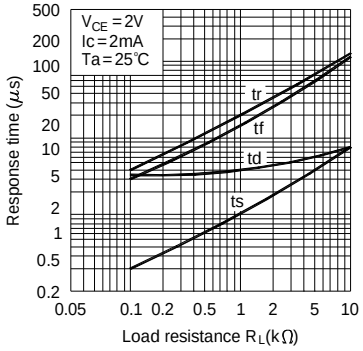

Fig.11 Frequency Response

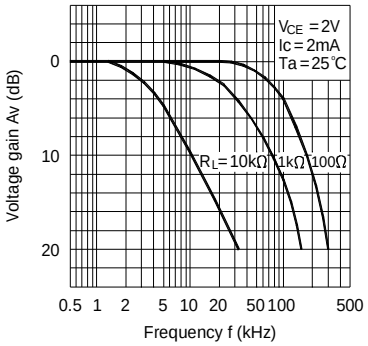

Test Circuit for Response Time

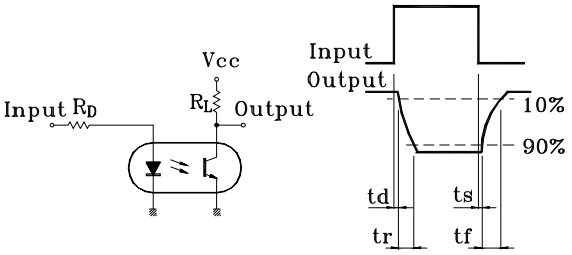

Test Circuit for Frequency Response

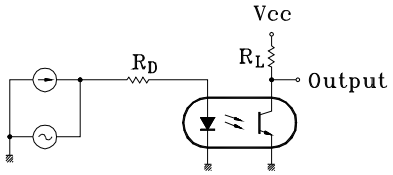

RECOMMENDED FOOT PRINT PATTERNS (MOUNT PAD)

Unit : mm

4 PIN

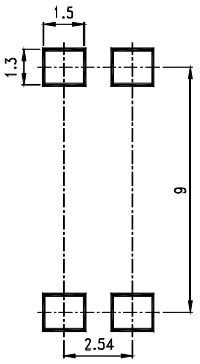

8 PIN

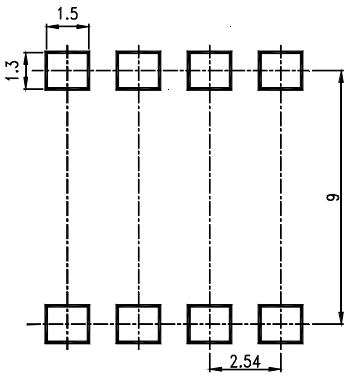

16 PIN

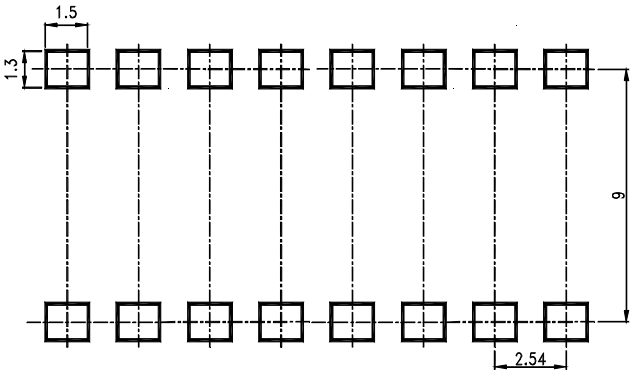

Notes:

- Lite-On is continually improving the quality, reliability, function or design and Lite-On reserves the right to make changes without further notices.
- The products shown in this publication are designed for the general use in electronic applications such as office automation equipment, communications devices, audio/visual equipment, electrical application and instrumentation.
- For equipment/devices where high reliability or safety is required, such as space applications, nuclear power control equipment, medical equipment, etc, please contact our sales representatives.
- When requiring a device for any ” specific” application, please contact our sales in advice.
- If there are any questions about the contents of this publication, please contact us at your convenience.
- The contents described herein are subject to change without prior notice.