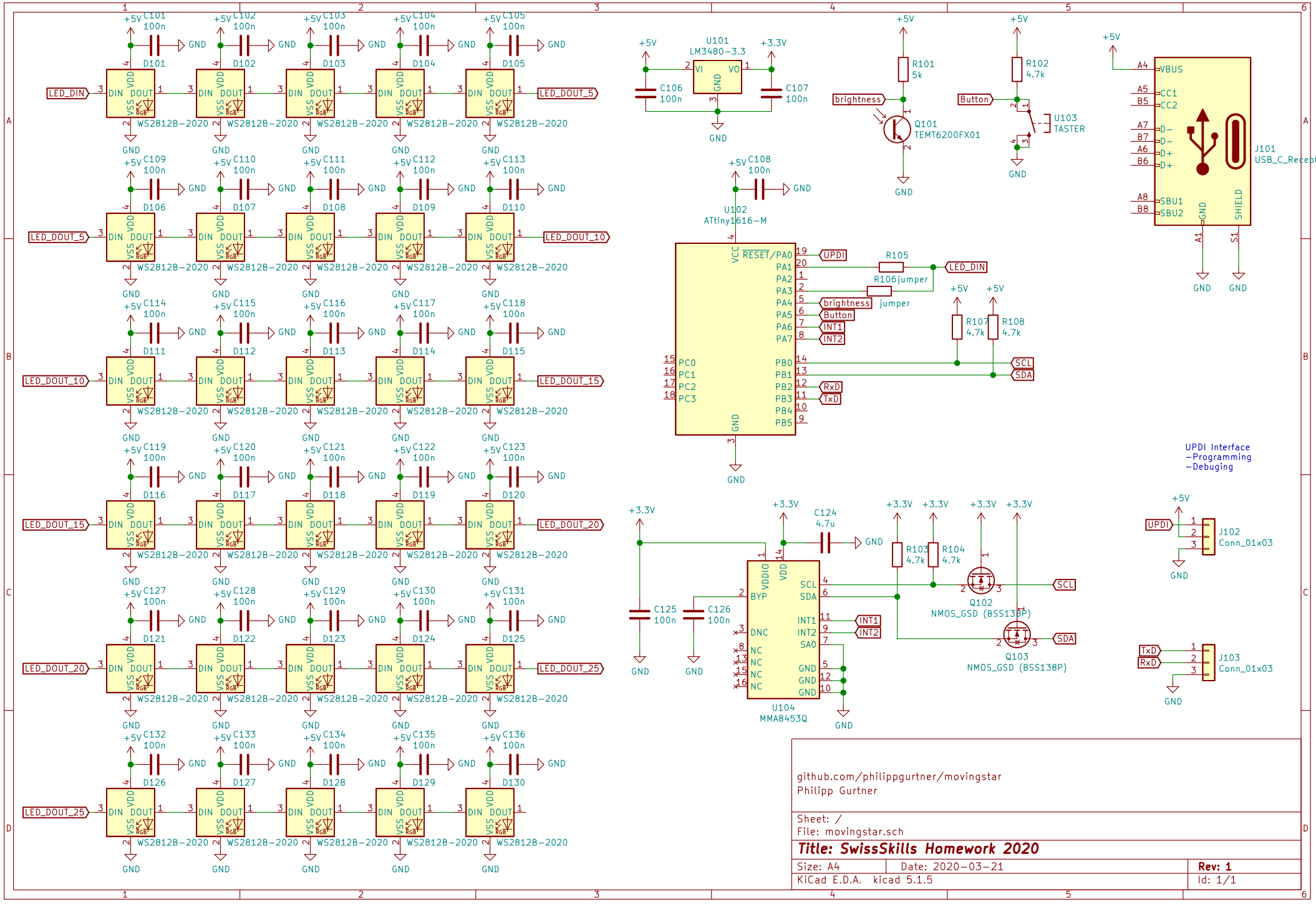
LED_DIN
LED_DOUT_5
LED_DOUT_10
LED_DOUT_15
LED_DOUT_20
LED_DOUT_25
WS2812B-2020
U101
LM3480-3.3
U102
ATtiny1616-M
U104
MMA8453Q
Q101
TEMT6200FX01
Q102
NMOS_GSD (BSS138P)
Q103
NMOS_GSD (BSS138P)
U103
TASTER
J101
USB_C_Receptacle_USB
J102
Conn_01x03
J103
Conn_01x03
UPDI Interface
-Programming
-Debuging
brightness
Button
UPDI
SCL
SDA
INT1
INT2
RxD
TxD
jumper
R106jumper
github.com/philippgurtner/movingstar
Philipp Gurtner
Sheet: /
File: movingstar.sch
Title: SwissSkills Homework 2020
Size: A4
Date: 2020-03-21
Rev: 1
KiCad E.D.A. kicad 5.1.5
Id: 1/1