Schematic

Breathayzer (Full Schematic)

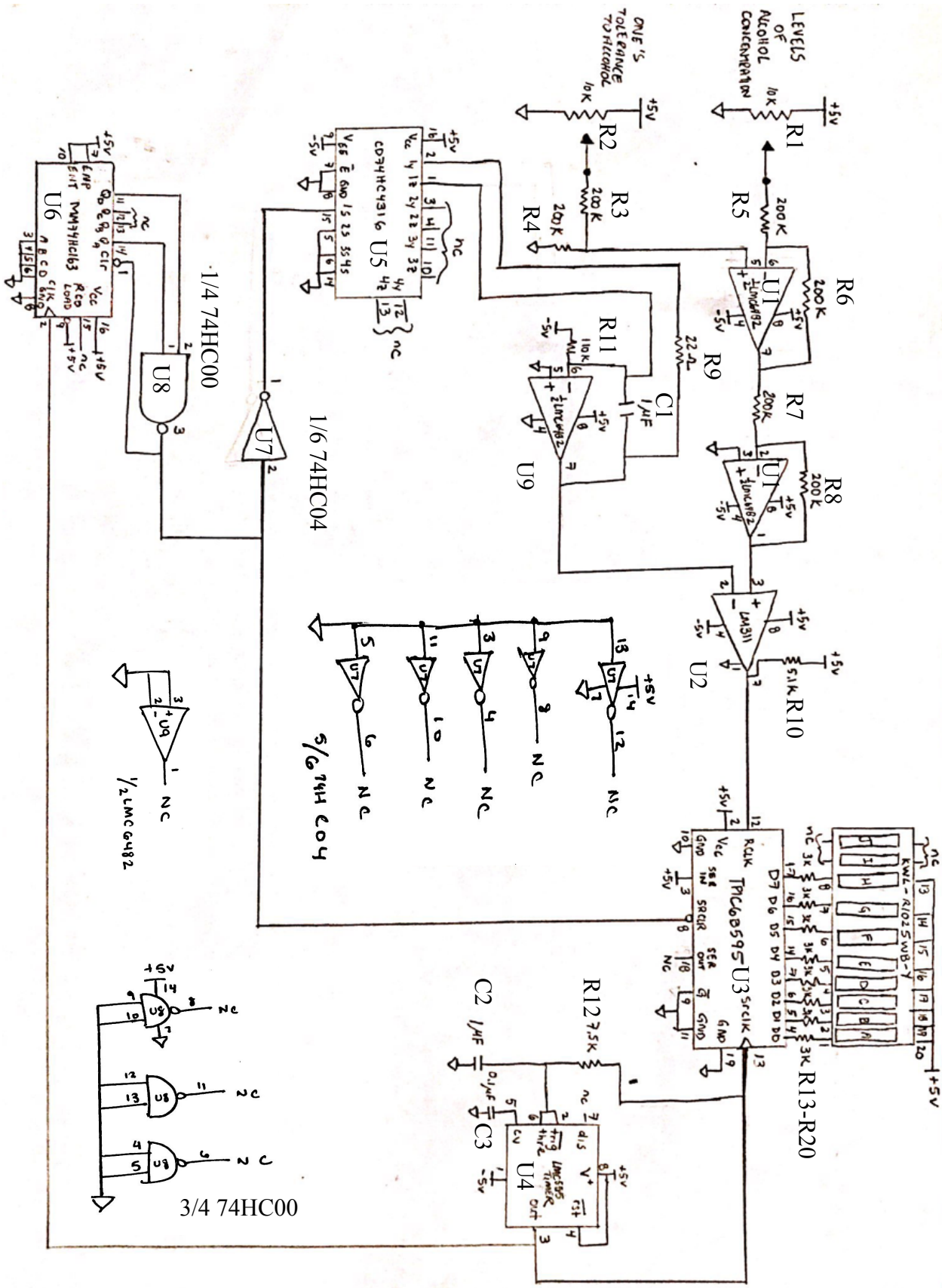

Reaction Game (Full Schematic)

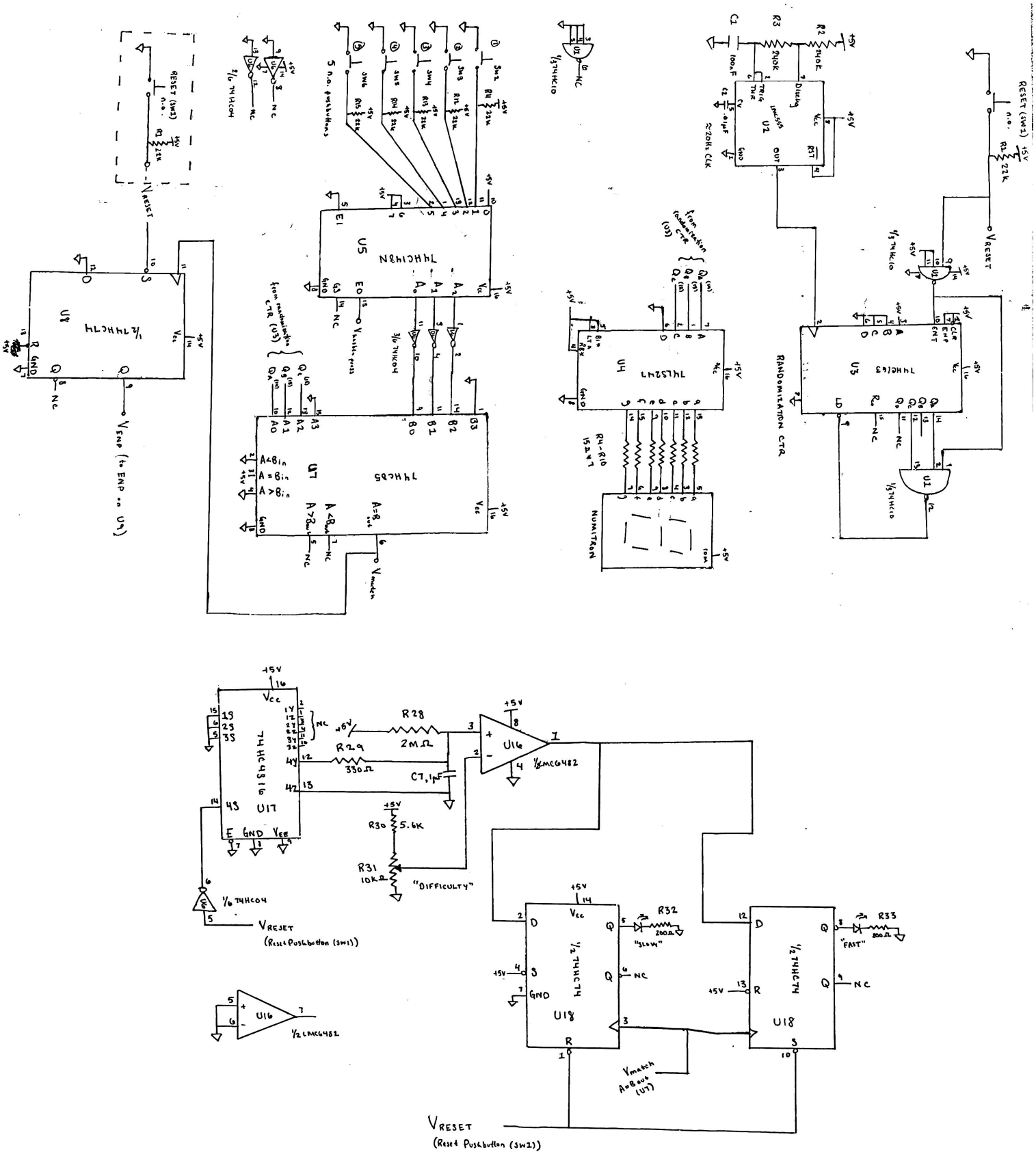

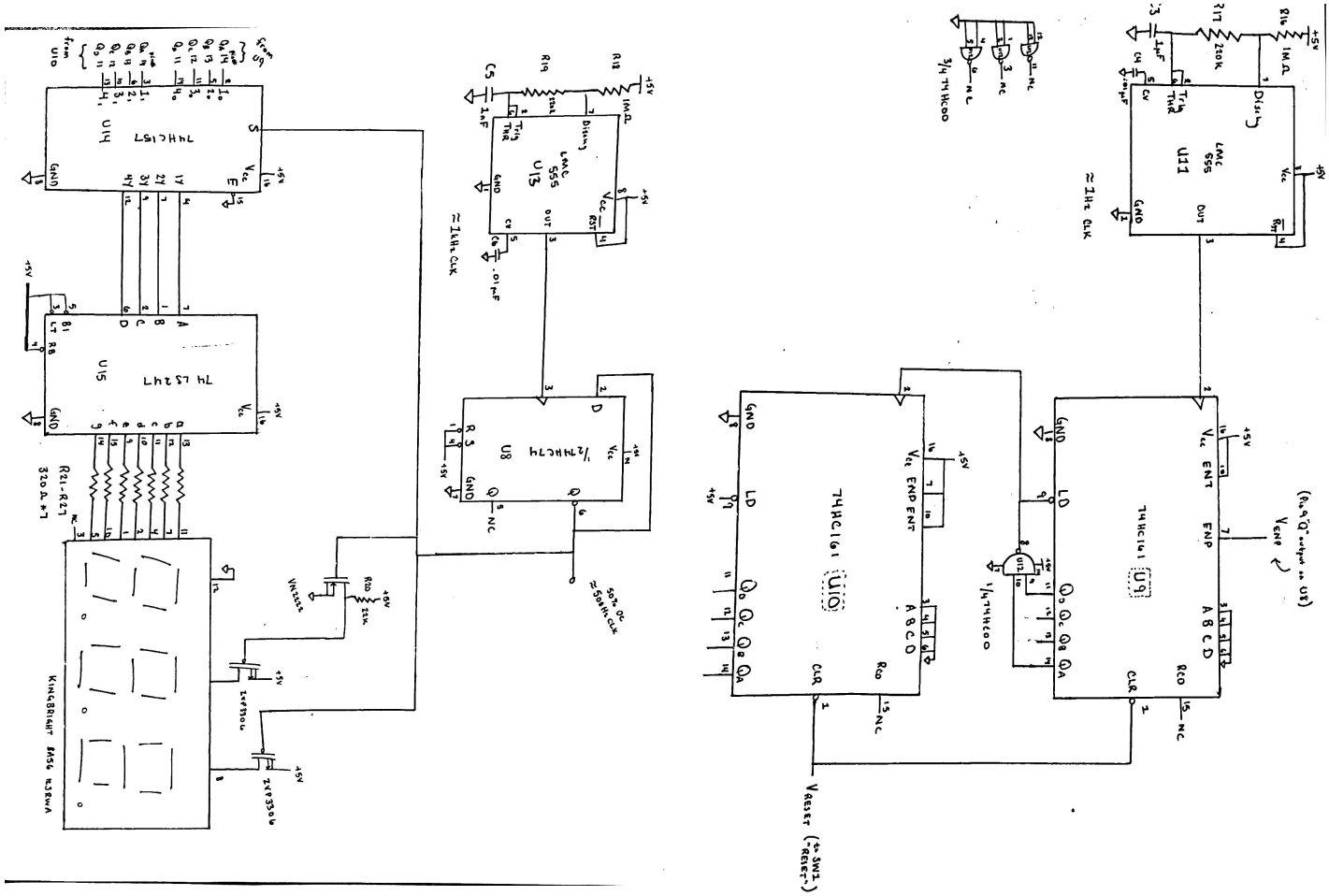
U11
LMC 555
≈ 1Hz CLK
U13
LMC 555
≈ 1kHz CLK
U14
74HC157
U15
74LS247
U8
1/2 74HC74
≈ 50Hz CLK
U10
74HC161
U9
74HC161
3/4 74HC00
1/4 74HC00
KINGBRIGHT BA56 HSRWA
R21-R27
320Ω ±7
VN2222L
2N3904
VRESET (to SW2 "RESET")
VENP (to U8)

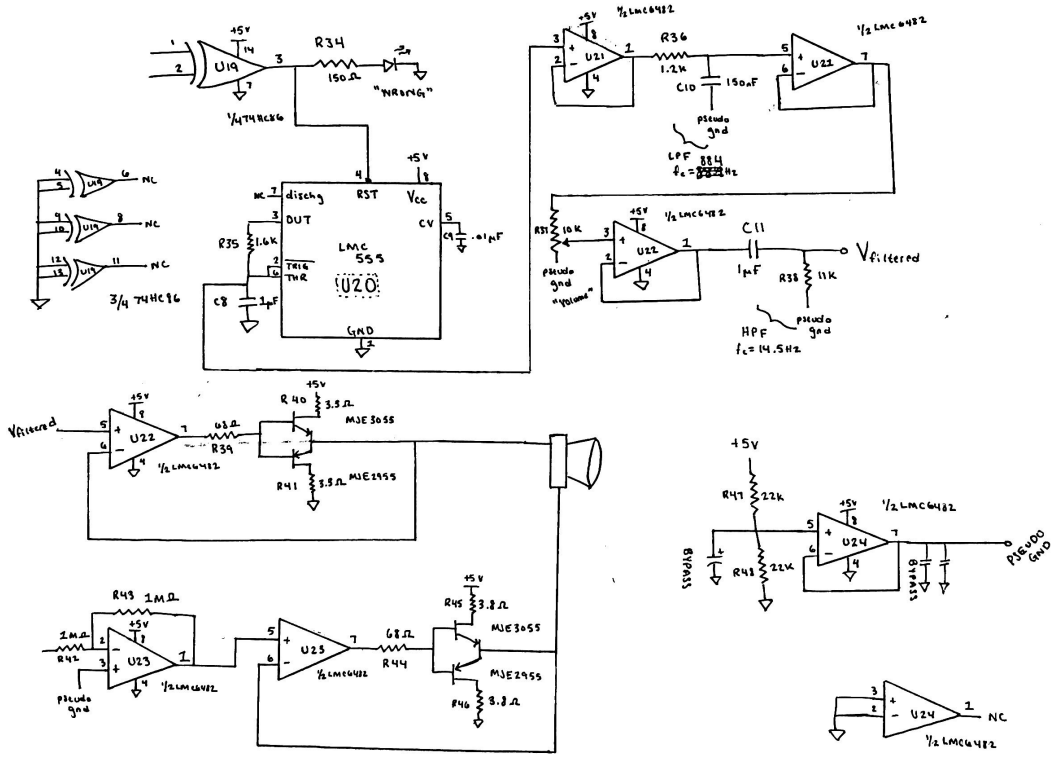
U19
1/4 74HC86
R34
150Ω
"NRBNG"
3/4 74HC96
U20
LMC 555
R35 1.6K
C8 1μF
C9 .01μF
U21
1/2 LMC6482
R36
1.2K
C10 150nF
pseudo gnd
LPF
U22
1/2 LMC6482
R37 10K
pseudo gnd "Volume"
C11
1μF
R38 11K
HPF
f_c = 14.5Hz
Vfiltered
U22
1/2 LMC6482
R39
R40 3.5Ω
R41 3.5Ω
MJE3055
MJE2955
U23
1/2 LMC6482
R42 1MΩ
R43 1MΩ
R44 68Ω
R45 3.8Ω
R46 3.8Ω
U24
1/2 LMC6482
R47 22K
R48 22K
BYPASS
PSEUDO GND
NC