Lab 8 - Bipolar Junction Transistors

Circuits, Devices, and Transduction

ES 152 - Fall 2020

Objectives

1. Use a bipolar junction transistor (BJT) to switch power delivery to an LED
2. Vary LED brightness with pulse width modulation (PWM)
3. Use a BJT to sink current from a brushed DC motor
4. Consider impedances involving a transistor interface
5. Bias and characterize a single-ended common emitter amplifier

Introduction

The transistor is, without much question, one of the most important technological elements of all time. As a critical building block for all modern electronic devices, the transistor has played a tremendous role in shaping our society's recent leap in information-driven productivity, ingenuity, and social connectivity. There are two basic classes of transistor: the *bipolar junction transistor* (BJT) and the *field-effect transistor* (FET). In contrast, they can be thought of as being current-controlled and voltage-controlled devices, respectively. Each class presents two types of use: **switching** and **amplification**. Each utility can be applied to both signals and power. In one instance, a transistor might act like a physical switch in permitting a signal to migrate from one net to another, which is useful in creating electronically-controlled sub-circuit interfaces. In another circumstance, a transistor might serve to source current to, or sink current from, a load and thereby switch power delivery. Further, because transistors are 'active' devices that rely on power supplied by an external source, they feature a capacity for amplification. In this context, an output signal can carry more power than the input signal, where the additional power comes from an external source.

While we will focus here and in the next lab on low-level, discrete transistor circuits, these devices can be aggregated into integrated circuits (ICs) with other complementary components that together perform relatively high-level tasks. For more on analog integrated circuits, including approaches to constructing an op-amp from an array of transistors, consider taking ES 154: Electronic Devices and Circuits. While a complex architecture can clearly give way to advanced utility (as is exemplified by the creation of an op-amp), it is important to understand discrete level transistor circuits. This will not only lend itself to unpacking and synthesizing such high-level arrays, but also prove useful in designing low-level circuits that offer utility on their own.

Practical Insight

Bipolar Junction Transistors

The bipolar junction transistor (BJT) is a three terminal semiconductor device with contacts termed the base, collector, and emitter. *Figure 1* illustrates not only the physical makeup of this device, which is comprised of three regions doped with alternating polarity, but also how this arrangement relates to its schematic symbol. This particular device features two junctions of opposite polarity NP and PN, or NPN in total, although do note that a PNP variant exists. Before looking at each mode of operation, we note that this configuration of elements is characterized by four parameters:

1. I_B - the base current (the current entering the base),
2. I_C - the collector current, which often nearly equals the emitter current I_E,
3. V_{BE} - the voltage between the base and the emitter, about 0.65 volts, and
4. V_{CE} - the voltage between the collector and the emitter

Additional related nomenclature includes voltage with a double letter subscript, like V_{CC}, to indicate the potential applied to one or another contact from an external source.

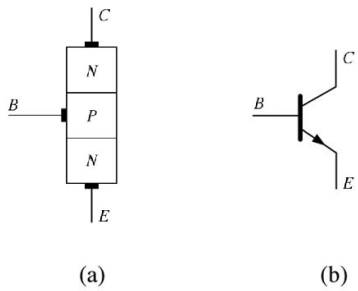

Figure 1: an NPN junction transistor

The behavior of this device can be described (in part) by a simple, but important, relation: current applied to the base leads to, and controls, a larger current from the collector to the emitter, if the external circuitry facilitates this. Take a moment to absorb and appreciate this relation. For an NPN BJT, the voltage applied to the collector must exceed the emitter to permit the described current flow. Altogether, this transistor can not only guide the direction of current, but also control the magnitude of this current as a fairly linear (but sometimes non-linear) function of the base current, a dependence the device behaves to maintain, which is captured in the following equations:

$$I_C = \beta I_B \ \mid \ I_E = I_C + I_B$$

Reasonably, β is the **current gain** of the device. Sometimes you'll see h_{FE} in datasheets, but these names are interchangeable. By applying KCL, an outbound emitter current is the sum of the inbound collector and base currents. Unfortunately, β can vary over a range from 50 - 250, with variation between copies of the same design, as a function of collector current and collector-emitter voltage, as well as temperature.

The external circuitry facilitates these relations. If a small current flowing into the base of a BJT controls a much larger current flowing from collector to emitter, the base-collector (a PN) junction is reverse-biased (that is, the collector voltage exceeds the base voltage) and the base-emitter (a PN) junction is conducting, so:

$$V_E = V_B - 0.65V$$

There are three distinct modes of operation for a BJT, shown in *Figure 2*:

1. **cut off** (switch off) — $I_B = 0$, so there is no conduction ($I_C = 0$)
2. **active** (amplifier) — current gain describes IO relation, $I_C = \beta I_B$
3. **saturation** (switch on) — I_B implies I_C that is unattainable, so $V_{CE} \to 0$

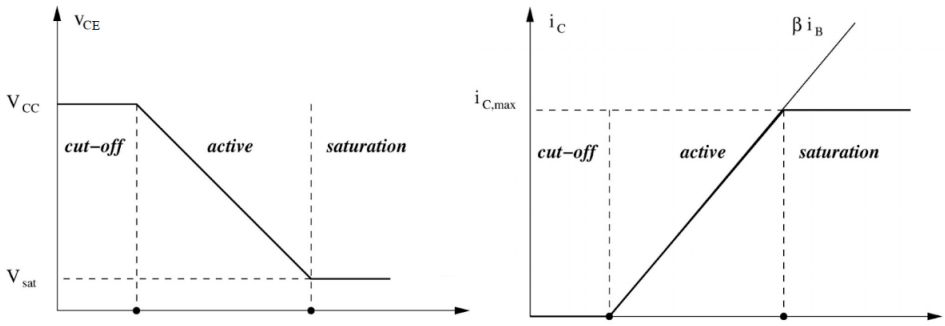

Figure 2: regions of operation for BJT

Part I - LED Control

Let's get started by considering how we can use a transistor as an electronically-controlled switch. Our objective for this part of the lab will be to switch an LED on and off and to use pulse width modulation (PWM) to control its perceived brightness. Driving an LED is a common switching application for discrete transistors. This method is often preferred in embedded design, as the transistor can minimize current drawn from the previous stage (a microcontroller, for instance). Remember, β can be used to relate a small input current to a much larger current drawn from an external source. *Figure 3* shows the circuit we will build, with a resistance on the base and an LED with serial resistance above the collector. For the time being, it may be helpful to view this arrangement as a SPST switch between the collector and emitter that has a position (open or closed) controlled by activity at the base.

As you first learned in Lab 5, the IV curve of a light-emitting diode is non-linear. With increasing voltage applied from anode to cathode, there is point at which the resulting current increases quite rapidly, the forward voltage. This threshold for meaningful conduction varies between LEDs (2-3V), particularly among emission wavelengths. Further, the intensity of light emitted is a function of the current applied. For instance, a 5 mA forward current might be mapped to a 2 cd (candela) intensity. So, we want to apply the voltage required to drive an appropriate current through the LED and thereby

emit the desired intensity of light. To accommodate a voltage source in excess of the required potential, we add a resistor in series to dissipate the remaining power in heat. Without accounting for the voltage drop across the transistor from collector to emitter, we can use Ohm's law to approximate the collector resistance for a 2 cd emission (assuming a 3.2V forward voltage and that 5mA current leads to 2 cd intensity):

$$R_C \approx \frac{5V - 3.2V}{5mA} = 360\Omega$$

Without current injected into the base, there will be no collector current (cut-off). The transistor is effectively 'off,' and with no current flowing through the LED, it will not emit light. In contrast, assuming that V_{CC} is sufficiently large and positive, saturation describes a region of operation in which the collector current simply cannot reach its multiple (β) of the base current. In the configuration shown, this is achieved by choosing a relatively small base resistance. Throughout the active region, V_{CE} decreases and can be thought of as 'pulling' the collector towards ground to satisfy the fundamental current relation (see *Figure 2*). In saturation, V_{CE} reaches a minimum (usually around 0.05 - 0.2V) and the transistor is completely 'on.' The collector current can no longer match the expectation set by the base current and current gain.

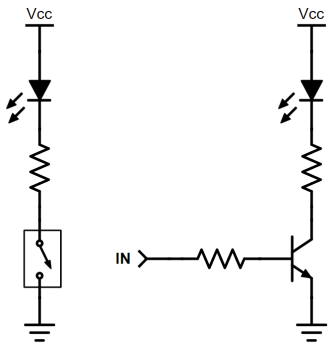

Figure 3: a transistor switch for LED drive

Overdriving the base makes the circuit conservative. Remember that β varies over a wide range and in response to a number of factors. For switching applications that require a well-controlled current (here, a fixed brightness), it is important to ensure that the BJT is driven consistently into saturation. We can select resistances as follows:

$$R_C = \frac{V_{CC} - V_f - V_{sat}}{I_C(desired)} \;\mid\; R_B = \Gamma\beta_{min}\,\frac{V_{in} - 0.65V}{I_C(desired)}$$

For the collector resistance, this expression is similar to the one we presented above, but has been modified to include the voltage drop across the transistor from collector to emitter in saturation. The base resistance can be calculated by considering the input voltage and base-emitter junction drop, alongside the desired collector current. In calculating base resistance, we estimate the smallest current gain and can even apply an arbitrary scalar $\Gamma < 1$ to ensure deep saturation at the cost of increased base current.

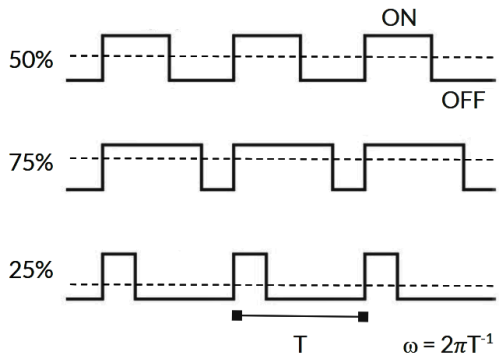

Figure 4: pulse width modulation

Once you have calculated the appropriate resistances to drive an LED at a specific current and built the resulting circuit, you can switch the LED on and off using a normally open push-button or a function generator. To extend this concept and to control the perceived brightness of the LED, we can employ PWM. Pulse width modulation refers to a process by which the switching times of a control signal are changed (modulated). Specifically, the width of the ON duration is modulated with respect to the period T. If switching for our LED circuit is completed at increasing frequency, there will be a point (called the flicker fusion threshold) at which your eyes and mind will no longer be able to perceive one or another state and instead blur the result to the average. In this way, brightness can be controlled from OFF to ON over a spectrum.

Part II - Brushed DC Motor Control

In transduction, one form of energy is converted into another. In sensing, energy from physical phenomena is converted into electrical signals. In actuation, energy from an electrical source is converted into physical phenomena. In Part I, we looked at the role of switching in the control of LEDs, which involves the latter form of transduction. This approach is generic to many actuators, however. Here, we employ switching to control the rotation and speed of a brushed DC motor. *Figure 5* shows the circuit we will build.

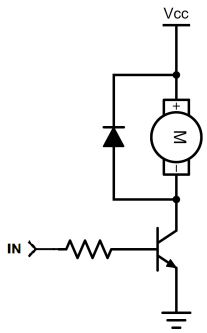

Figure 5: a transistor switch for a brushed DC motor

For inductive loads like motors, it is important to include a suppression (sometimes snubber or flyback) diode in a reverse-bias orientation to dissipate surges in energy that result from rapid changes in the applied current, a consequence of switching. Recall that $v_L = L \cdot di/dt$, so a short dt gives way to large v_L, or voltage across the motor. The fly-back diode allows this energy to dissipate in cycling through the loop it creates.

Part III - Common Emitter Amplifier

We pivot now to consider the linear operation of BJTs, which can give way to amplification. *Figure 6* shows a discrete transistor circuit often called an **emitter follower**. This circuit obtained its name because the emitter voltage, or output, follows—is equal to—the base voltage, or input, less the forward voltage V_{BE}, but only if V_B is large enough to ensure conduction between the base and emitter. This configuration is meaningful because its input impedance is large with respect to its output impedance, a highly desirable characteristic of buffers, which you recall are used to mitigate the loading effect. If we were to derive the input impedance from KCL we would find:

$$Z_{in} = (\beta + 1)Z_{load}$$

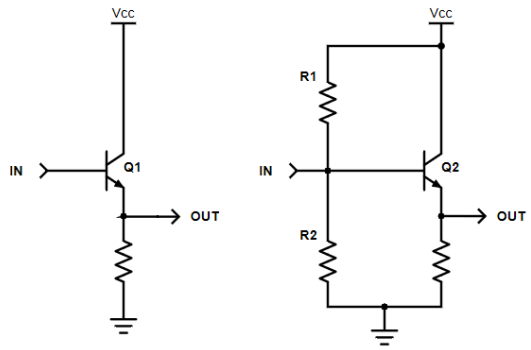

Figure 6: an emitter follower—with and without biasing

As drawn (on the left), Z_{load} is the emitter resistance, although any additional load downstream would contribute in parallel. Recall that β is the current gain of the device with a magnitude on the order of 100. This ensures that $Z_{in} \gg Z_{out}$. One shortcoming of the arrangement on the left is its reliance on V_B exceeding the forward voltage of the base-emitter junction to ensure conduction. If the input (V_B) is less than about 0.65V, the output signal will be clipped. Further, the base-emitter 'diode' can only source current to the output. That is, current cannot flow into the emitter. To resolve the former dilemma, we can DC **bias** AC-coupled signals. That is, we can elevate time-varying signals above our reference node with a static (DC) offset and thereby avoid this loss of information. The right side of *Figure 6* illustrates how a voltage divider can be used to introduce a DC bias, fixing the quiescent V_B somewhere between the two power rails. Note that a 'quiescent' parameter describes its value in the absence of an

applied signal (commonly, DC bias in the absence of AC variation). In working with an emitter follower, be sure to remember the voltage drop over the base-emitter junction. Usually, it is best to adjust the DC bias of the base to center the output of the follower.

While the voltage transferred does not exhibit any gain, as it merely follows the input, the input-output impedance characteristic lends itself to an effective current gain. That is, because the output impedance is markedly smaller than the input impedance, the same input voltage lends itself to a larger current at the output.

Common-Emitter Amplifier

We can modify this topology via a pair of simple additions to realize what is called a common-emitter amplifier. If we add a collector resistance to our biased emitter follower, we find that we can sink current through said resistor in a linear response to action at the base. *Figure 7* illustrates such an arrangement, with a pair of additional capacitors we will address in a moment. Importantly, the biasing resistors can set the quiescent state in such a way that we are concerned only with time-varying deflections from this resting state that do *not* push the transistor into saturation or cutoff—the transistor is said to be active. The input capacitor C_1 serves to eliminate pre-existing DC bias in forming a high-pass filter with R_1 and R_2, which are effectively in parallel.[1]

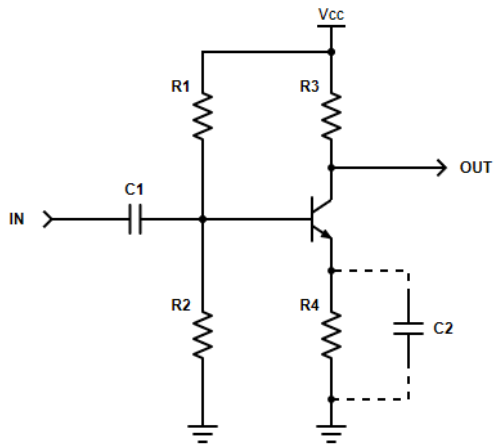

Figure 7: a common-emitter amplifier

Ultimately, we are interested in signal variations (above DC), which are denoted by lowercase italic variables. For instance, variations of the static V_B are described as v_B. In line with our understanding of the emitter follower, v_B gives way to v_E, less the forward voltage of the base-emitter junction. As you would expect, v_E causes variations in the emitter current, i_E, which you recall is nearly equal to the collector current i_C (consider KCL). Importantly, DC characteristics set the quiescent operating point for an amplifier around which AC variations occur.

[1] you can confirm this by redrawing the circuit with V_{CC} and ground of the same supply.

The voltage at the collector varies, by said transitive action, as:

$$v_C = -\frac{R_C}{R_E} v_B$$

In *Figure 7*, R_C and R_E are R_3 and R_4, respectively. The ratio of these resistances sets the voltage gain of the amplifier. For small R_E associated with high gain, there may be bias instability caused by the temperature sensitivity of the base-emitter junction. If R_E is small enough, V_E may be smaller than the forward voltage of said junction, which can change, for instance, by -2 mV/°C. As a consequence, V_E is then subject to drift, affecting the concomitant collector current and bias point. This can be resolved by adding a bypass capacitor to the emitter resistance, since the collective emitter impedance will be small for relatively high frequencies, where the signals of interest reside, and large at DC. This means the gain is maintained for v_C and biasing will again be 'stiff.' In any case, this addition is an optional second-order adjustment.

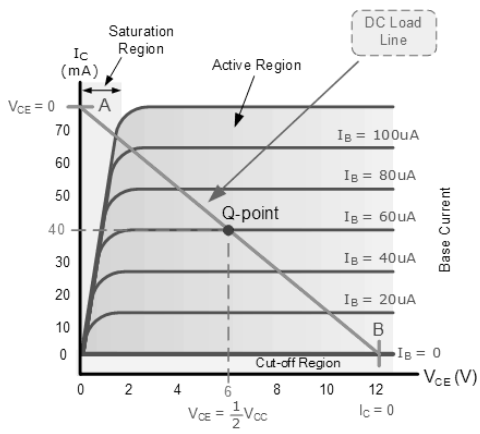

Figure 8: output characterization curves

While a simple expression for gain may be comforting, it is important to better understand precisely how the biasing must be set to ensure undistorted linear operation. To facilitate this deliberation, *Figure 8* depicts the output characterization curves for this amplifier. Specifically, the diagram plots I_C against V_{CE} for varied I_B. On closer inspection, we can see each of the three regions of operation first described on page 3:

1. **cut off** (switch off) — $I_B = 0$, so there is no conduction ($I_C = 0$)
2. **saturation** (switch on) — I_B implies I_C that is unattainable, so $V_{CE} \to 0$
3. **active or <u>linear</u>** (amplifier) — current gain describes IO relation, $I_C = \beta I_B$

Note that each curve depicts a different value of I_B. To pursue active operation that satisfies the provided expression for gain, we need to ensure that our quiescent point (or Q-point for short) is comfortably within the active region. You have probably noticed that the Q-point in the above depiction sits on a linear gradient called the 'load line.' Indeed, the load in this topology, a combination of R_C and R_E, reduces the domain of possible operational points to a line like this.

Expressions for the extreme coordinates (A and B) of the load line in *Figure 8*:

$$A : I_{Cmax} = \frac{V_{CC}}{R_C + R_E} \quad | \quad B : V_{CEmax} = V_{CC}$$

We can use the following to relate V_{CE} to the collector current and gain set resistors:

$$V_{CE} = V_{CC} - I_C(R_C + R_E) \quad | \quad |G| = \frac{R_C}{R_E}$$

$$V_{CE} = V_{CC} - I_C(1 + \frac{1}{G})R_C$$

The following are sequential steps you could take in calculating the appropriate component values for your common-emitter amplifier (needed for the pre-lab assignment):

1. Calculate R_3 for a quiescent $I_C = 1mA$, $V_{CE} = 0.5V_{CC}$, and $G = 10$
2. Distribute the load resistance between R_3 and R_4 to fix G = 10
3. Check the transistor datasheet to approximate β for this I_C
4. Calculate R_2 in view of V_{BE} and I_E over R_4 — ensure $I_{R2} > 10I_B$
5. Calculate R_1 in view of V_{CC}, V_{BE}, and I_E over R_4 — consider KCL at the base
6. Calculate C_1 in view of the frequency of the input signal and $R_1||R_2$

Outline

1. Use a bipolar junction transistor (BJT) to switch power delivery to an LED
2. Vary LED brightness with pulse width modulation (PWM)
3. Use a BJT to sink current from a brushed DC motor
4. Bias and characterize a single-ended common emitter amplifier
5. Complete the Python notebook template

Report

The only deliverable for this lab is a report generated from a Python notebook template. In lab, this notebook should help you to capture or tabulate relevant information (measurements and notes). As a report, this document should serve to describe your observations, results, perspectives, and conclusions.