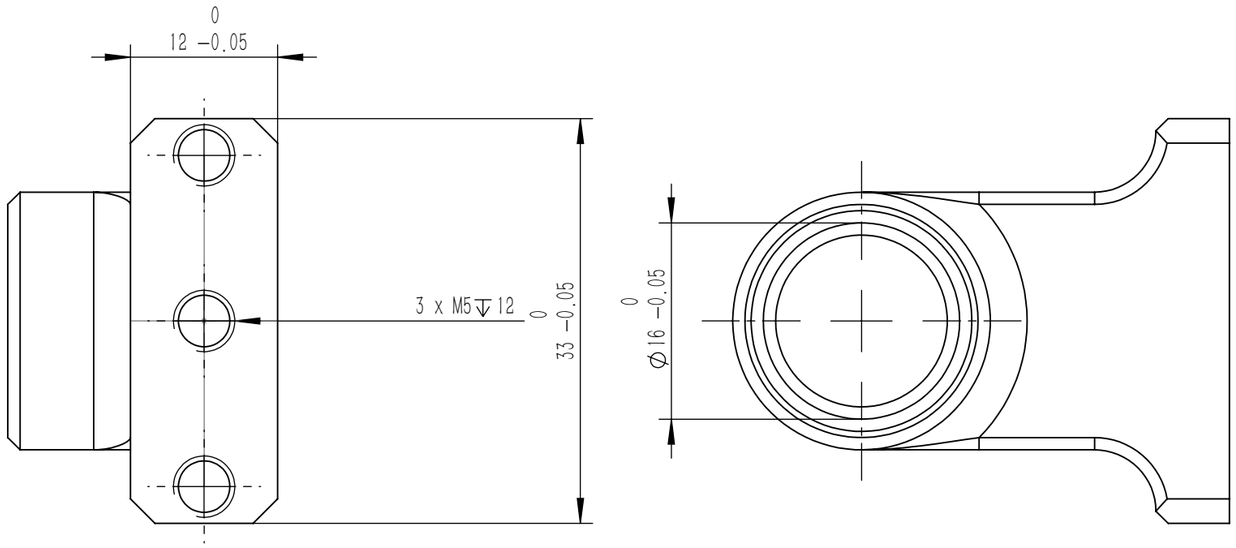

Mark	Number	Zone	Change	Sign	Day	M	D
Design			Standard				
Check			Process				
Design Supervisor			Review				
			Approval				

6061 Aluminum Alloy

Stage Mark	Weight	Scale
	0.025	2:1

Foot·····Pcs

4Pcs

Total No. Version

Replacement

· Pcs · ·

·(·)·Pcs··

Drafting

Draft Check

·Bottom···

Bottom···

Signature

Date