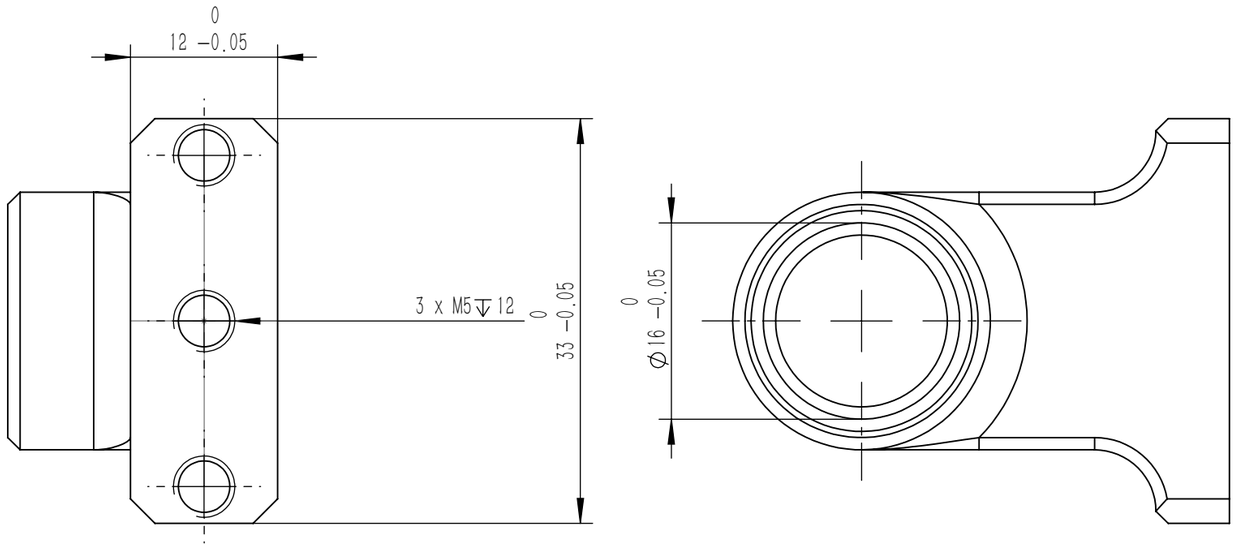

· Pcs · ·	
·(·)·Pcs··	
Drafting	
Draft Check	
·Bottom···	
Bottom···	
Signature	
Date	

						7075Aluminum Alloy			
Mark	Numbe	Zone	Change F	Signa	Y M D	Stage Mark		Weigh	Scale
Design			Standard·					0.025	2:1
Check			Process						
Design Supervisor			Review						
			Approval			Total	No.	Version	

Foot·····Pcs

4Pcs

Replacement