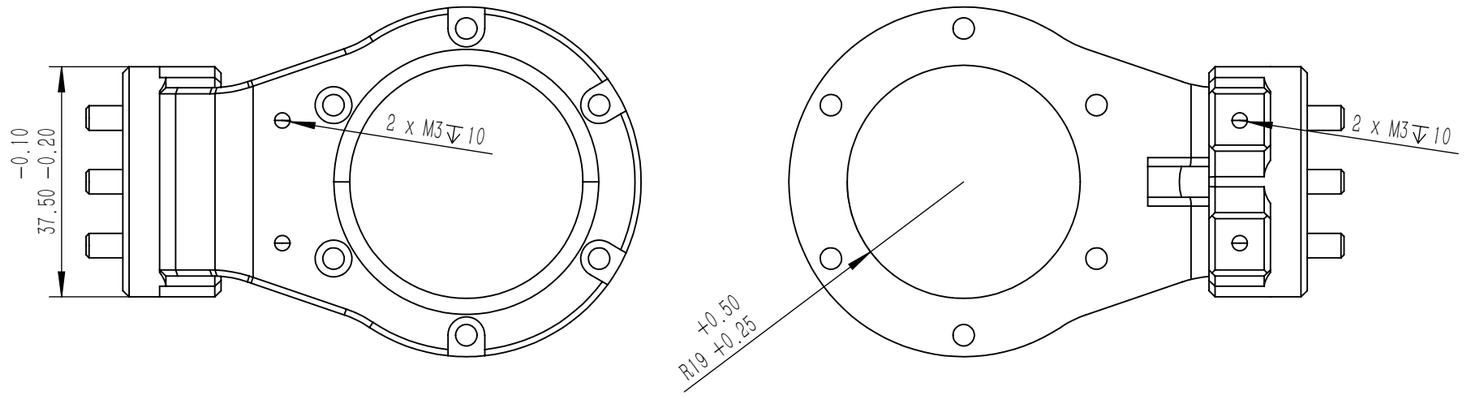

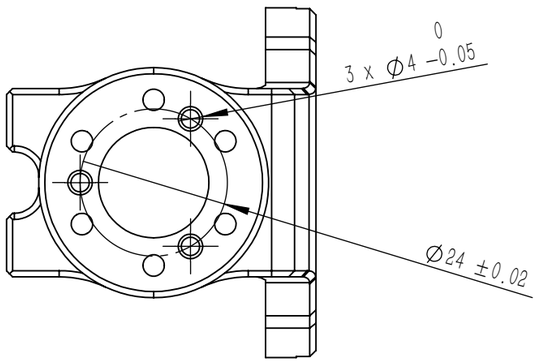

· Pcs · ·	
·(·)·Pcs··	
Drafting	
Draft Check	
·Bottom···	
Bottom···	
Signature	
Date	

						6061 Aluminum Alloy			
Mark	Numbe	Zone	Change	FSigna	Y M D	Stage Mark	Weigh	Scale	Hand·1
Design			Standard·				0.349	1:1	
Check			Process						4Pcs
Design Supervisor			Review						
			Approval			Total	No.	Version	Replacement