สมาชิก

นางสาวณัฐนันทน์ บุษดี	673380037-1	Network Architects
นางสาวศิริรัตน์ ชัยชนะ	673380060-6	Network Architects
นางสาวปภาวรินทร์ นาเมืองรักษ์	673380275-5	IaC/DevOps
นางสาววิภาวี ฤทธิหาญ	673380514-3	IaC/DevOps
นางสาวปรนันท์ บุสดีวงค์	673380276-3	QA/Test
นายพิสิษฐ์ ทรัพย์อุดมโชติ	673380285-2	QA/Test

Lab 4 using your specific repository, layout, and networking assumptions. This version **treats Local subnets as private networks** and **treats the remote server / inter-site network as a 10.10.x.x "internet/public network"** for the purposes of NAT and routing logic. It also assumes the repository hierarchy:

```
None
automation/
├── mockup-infra/
└── week02-stateless-stateful/
    └── phase1-mockup/
```

We will produce:

✅ A revised **high-fidelity lab plan** ✅ **Detailed addressing & topologies** ✅ **Cisco-themed network section** ✅ **IaC / VS Code section** ✅ **Troubleshooting and engineering reflection** ✅ A complete **README.md** ready to be committed to the repo

---

🧪 LAB 4 Simulated Internet (10.10.0.0/16) & Private LANs with Stateful vs Stateless Services

---

🎯 LAB GOALS

1. **Network Setup:** Create two local labs (A & B) connected via a simulated "public/internet" network (10.10.0.0/16)
2. **NAT + Routing:** Configure static routes and NAT so local traffic reaches remote services

3. **Application Deployment:** Use `mockup-infra` from your repository to deploy stateless and stateful APIs
4. **Testing:** Compare how sessions behave locally vs across the simulated internet

---

👥 TEAM BREAKDOWN (5–6 students)

Role	Count	Focus
Network Architects	2	Router configs, Cisco CLI
IaC/DevOps	2	VS Code, mockup-infra
QA/Test	1–2	Client scripting, session behavior

🗺️ UPDATED NETWORK TOPOLOGY

```python
                10.10.12.0/30 "Public/Internet"
            ┌──────────────────────────┐
            |                          |
        R1-G0/0 (10.10.12.1)      R2-G0/0 (10.10.12.2)
            |                          |
   Private LAN A (192.168.10.0/24)     Private LAN B (192.168.20.0/24)
            |                          |
        SwitchA                      SwitchB
            |                          |
 ServerA (mockup)            ServerB (mockup)
 ClientA                         ClientB
```

We treat 10.10.12.0/30 as a **simulated internet** for the purposes of NAT + public reachability.

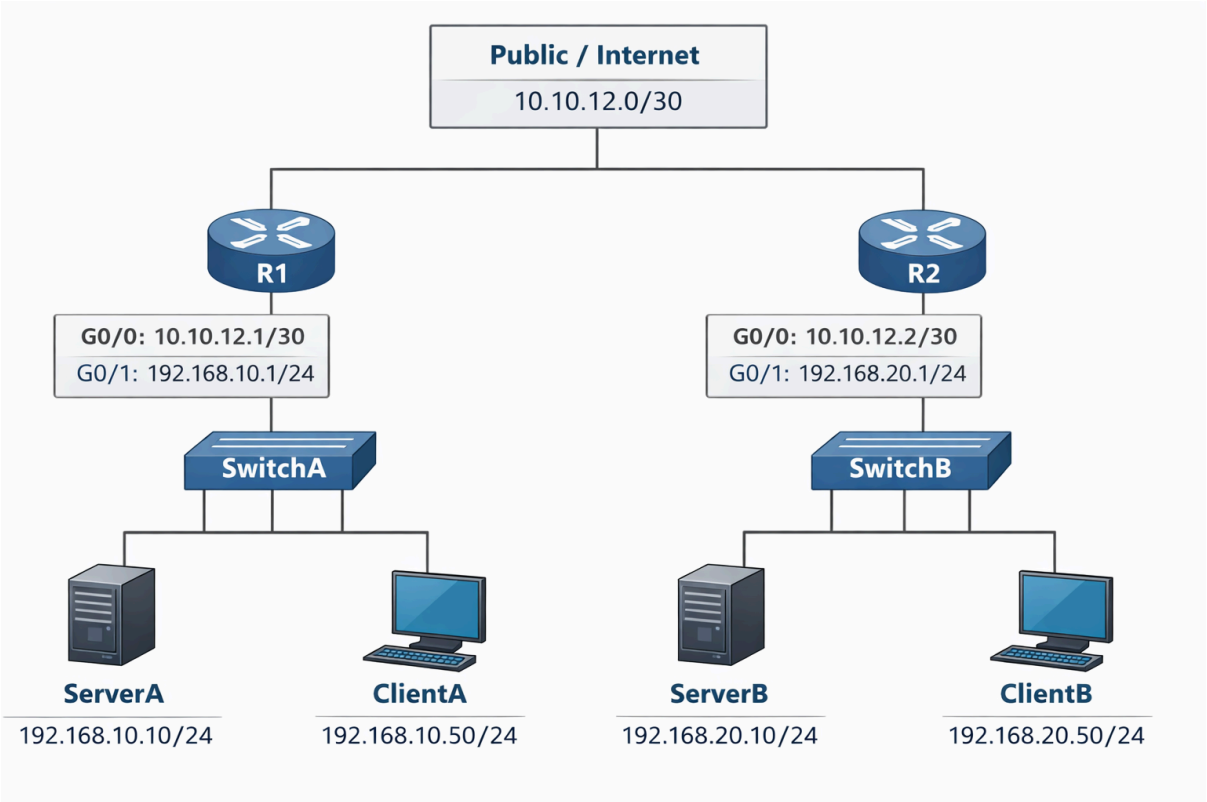

📍 ADDRESS TABLE

Component	Interface	IP	Mask	Role
R1	G0/0	10.10.12.1	/30	Public
R1	G0/1	192.168.10.1	/24	LAN A Gateway
ServerA	eth0	192.168.10.10	/24	Mockup infra A
ClientA	eth0	192.168.10.50	/24	Tester
R2	G0/0	10.10.12.2	/30	Public
R2	G0/1	192.168.20.1	/24	LAN B Gateway
ServerB	eth0	0	/24	Mockup infra B
ClientB	eth0	192.168.20.50	/24	Tester

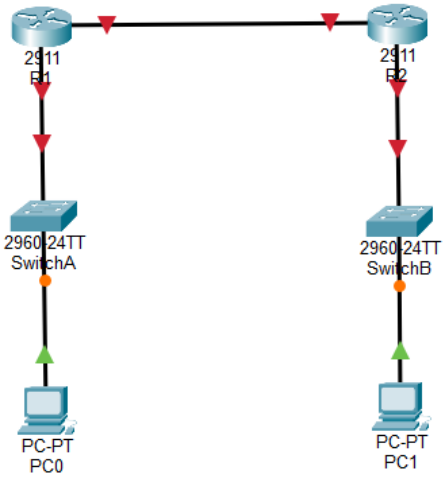

cisco packet tracer simulation

🔧 PART 1 — CISCO-STYLE NETWORK CONFIGURATION

Cisco file : https://drive.google.com/file/d/1JdZXDuFL6cN0LnO4PDzVAbLKrCXQN8Nt/view?usp=sharing
ตั้ง Static Route + NAT Overload เพื่อให้ติดต่อข้ามฝั่งกันได้ผ่าน 10.10.12.0/30 (Public Internet)

🧱 R1 CONFIGURATION (LAN A)

```
None
enable
conf t

hostname R1

interface g0/0/0
 ip address 10.10.12.1 255.255.255.252
 ip nat outside
 no shutdown

interface g0/0/1
 ip address 192.168.10.1 255.255.255.0
 ip nat inside
 no shutdown
```

```
ip route 192.168.20.0 255.255.255.0 10.10.12.2

access-list 10 permit 192.168.10.0 0.0.0.255
ip nat inside source list 10 interface g0/0/0 overload

end
write memory
```

```
R1#show ip interface brief
Interface              IP-Address      OK? Method Status                Protocol
GigabitEthernet0/0/0   unassigned      YES DHCP   up                    up
GigabitEthernet0/0/1   192.168.10.1    YES NVRAM  up                    up
GigabitEthernet0/0/2   unassigned      YES NVRAM  down                  down
GigabitEthernet0/0/3   unassigned      YES NVRAM  down                  down
Serial0/1/0            100.10.10.1     YES NVRAM  up                    up
Serial0/1/1            100.10.10.1     YES NVRAM  up                    up
R1#conf t
Enter configuration commands, one per line.  End with CNTL/Z.
R1(config)#interface g0/0/0
R1(config-if)#ip address 10.10.12.1 255.255.255.252
R1(config-if)#ip nat outside
R1(config-if)#no shutdown
R1(config-if)#exit
R1(config)#
```

```
R1(config)#interface g0/0/1
R1(config-if)#ip address 192.168.10.1 255.255.255.0
R1(config-if)#ip nat inside
R1(config-if)#no shutdown
R1(config-if)#exit
R1(config)#
```

```
R1(config)#ip route 192.168.20.0 255.255.255.0 10.10.12.2
R1(config)#access-list 10 premit 192.168.10.0 0.0.0.255
                                 ^
% Invalid input detected at '^' marker.

R1(config)#access-list 10 permit 192.168.10.0 0.0.0.255
R1(config)#exit
R1#
```

COM11 - PuTTY

```
% 100.10.10.0 overlaps with Serial0/1/0
R1>enable
R1#conf t
Enter configuration commands, one per line.  End with CNTL/Z.
R1(config)#exit
R1#shoe ip interface brief
      ^
% Invalid input detected at '^' marker.

R1#show ip interface brief
Interface              IP-Address      OK? Method Status                Protocol
GigabitEthernet0/0/0   unassigned      YES DHCP   up                    up
GigabitEthernet0/0/1   192.168.10.1    YES NVRAM  up                    up
GigabitEthernet0/0/2   unassigned      YES NVRAM  down                  down
GigabitEthernet0/0/3   unassigned      YES NVRAM  down                  down
Serial0/1/0            100.10.10.1     YES NVRAM  up                    up
Serial0/1/1            100.10.10.1     YES NVRAM  up                    up
R1#conf t
Enter configuration commands, one per line.  End with CNTL/Z.
R1(config)#interface g0/0/0
R1(config-if)#ip address 10.10.12.1 255.255.255.252
R1(config-if)#ip nat outside
R1(config-if)#no shutdown
R1(config-if)#exit
R1(config)#interface g0/0/1
R1(config-if)#ip address 192.168.10.1 255.255.255.0
R1(config-if)#ip nat inside
R1(config-if)#no shutdown
R1(config-if)#exit
R1(config)#ip route 192.168.20.0 255.255.255.0 10.10.12.2
R1(config)#access-list 10 premit 192.168.10.0 0.0.0.255
                                 ^
% Invalid input detected at '^' marker.

R1(config)#access-list 10 permit 192.168.10.0 0.0.0.255
R1(config)#exit
R1#
R1#ip nat inside source list 10 interface g0/0/0 overload
      ^
% Invalid input detected at '^' marker.

R1#conf t
Enter configuration commands, one per line.  End with CNTL/Z.
R1(config)#ip nat inside source list 10 interface g0/0/0 overload
Cannot change mapping's interface name, or the mapping already exists; remove mapping first to make change.
R1(config)#
```

```
R1(config)#exit
R1#show ip nat statistics
Total active translations: 0 (0 static, 0 dynamic; 0 extended)
Outside interfaces:
  GigabitEthernet0/0/0
Inside interfaces:
  GigabitEthernet0/0/1
Hits: 0  Misses: 0
 Reserved port setting disabled provisioned no
 Dynamic overload mapping configured: 1
Expired translations: 0
Dynamic mappings:
-- Inside Source
[Id: 1] access-list 10 interface GigabitEthernet0/0/0 refcount 0
nat-limit statistics:
 max entry: max allowed 0, used 0, missed 0
In-to-out drops: 0  Out-to-in drops: 0
Pool stats drop: 0  Mapping stats drop: 0
Port block alloc fail: 0
IP alias add fail: 0
Limit entry add fail: 0
R1#
```

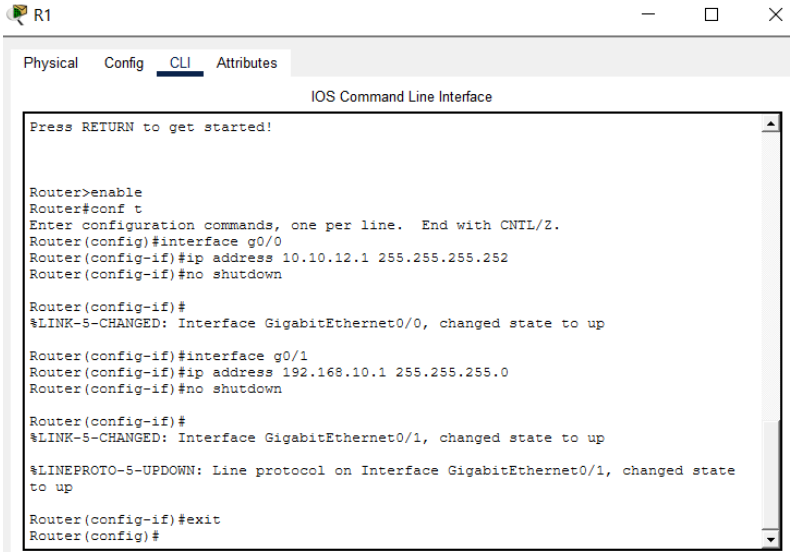

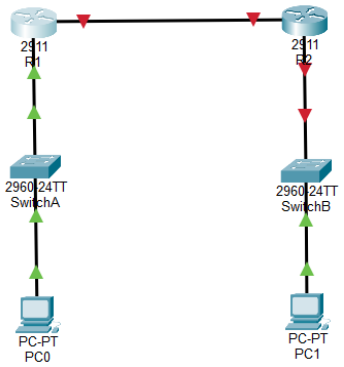

Config R1 done✅

🧱 R2 CONFIGURATION (LAN B)

```
None
enable
conf t

hostname R2

interface g0/0/0
 ip address 10.10.12.2 255.255.255.252
 ip nat outside
 no shutdown

interface g0/0/1
 ip address 192.168.20.1 255.255.255.0
 ip nat inside
 no shutdown

ip route 192.168.10.0 255.255.255.0 10.10.12.1

access-list 10 permit 192.168.20.0 0.0.0.255
ip nat inside source list 10 interface g0/0/0 overload

end
write memory
```

```
Router>enable
Router#conf t
Enter configuration commands, one per line.  End with CNTL/Z.
Router(config)#hostname R2
R2(config)#
*Mar 11 08:44:29.508: ALL modules are online!interface g0/0/0
R2(config-if)#interface g0/0/0
R2(config-if)# ip address 10.10.12.2 255.255.255.252
R2(config-if)# ip nat outside
R2(config-if)# no shutdown
R2(config-if)#interface g0/0/1
R2(config-if)#
*Mar 11 08:44:59.512: ALL modules are online!
R2(config-if)# ip address 192.168.20.1 255.255.255.0
R2(config-if)#
R2(config-if)# ip nat inside
R2(config-if)# no shutdown
R2(config-if)#ip route 192.168.10.0 255.255.255.0 10.10.12.1
R2(config)#access-list 10 permit 192.168.20.0 0.0.0.255
R2(config)#ip nat inside source list 10 interface g0/0/0 overload
R2(config)#end
R2#
*Mar 11 08:45:26.461: %SYS-5-CONFIG_I: Configured from console by consolewrite memory
Building configuration...

*Mar 11 08:45:29.550: ALL modules are online![OK]
```

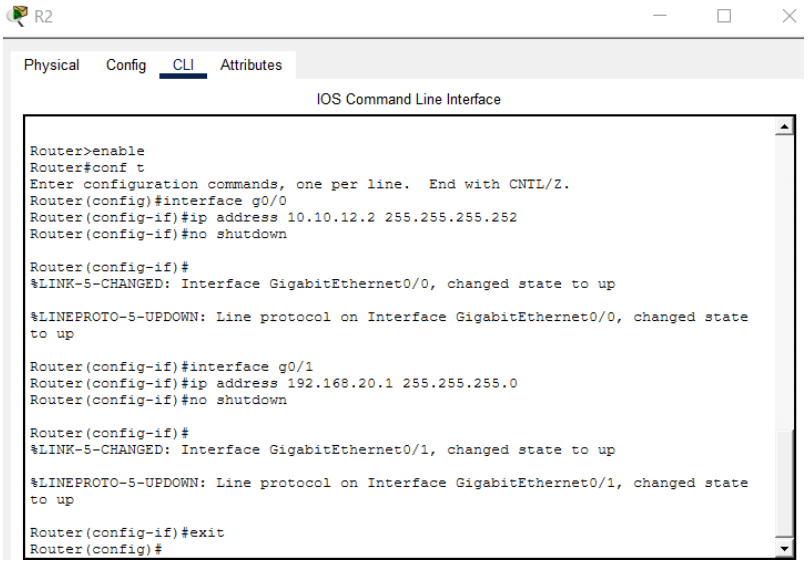

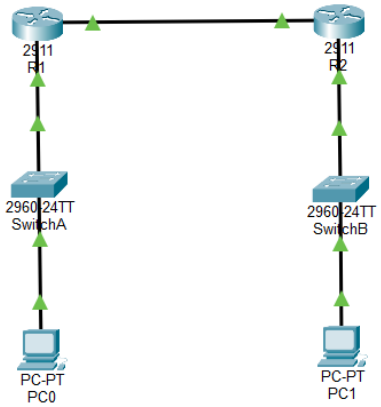

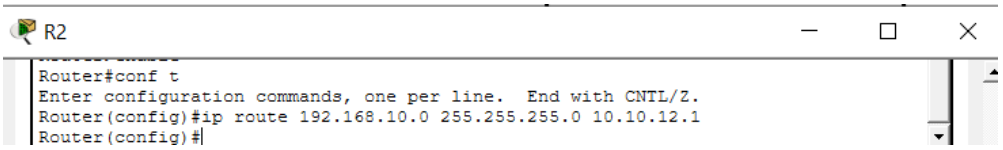

Config R2 done✅

SET IP TO PCs

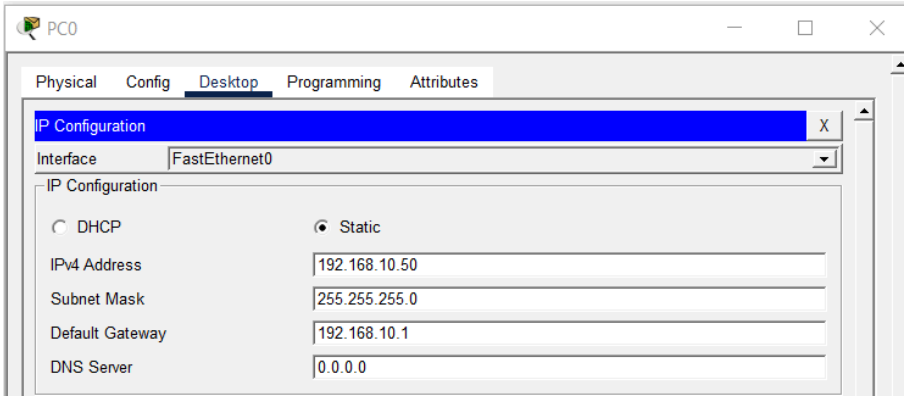

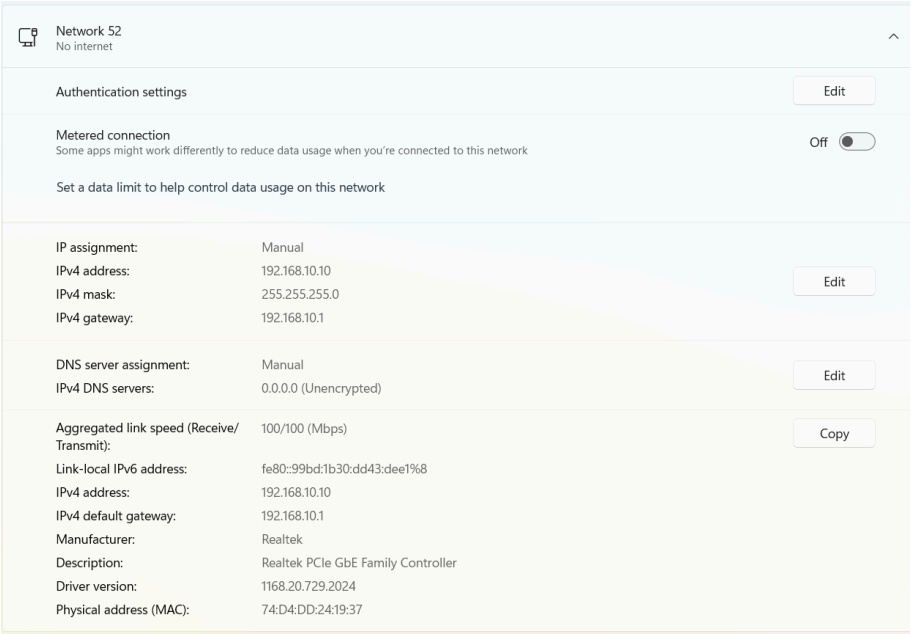

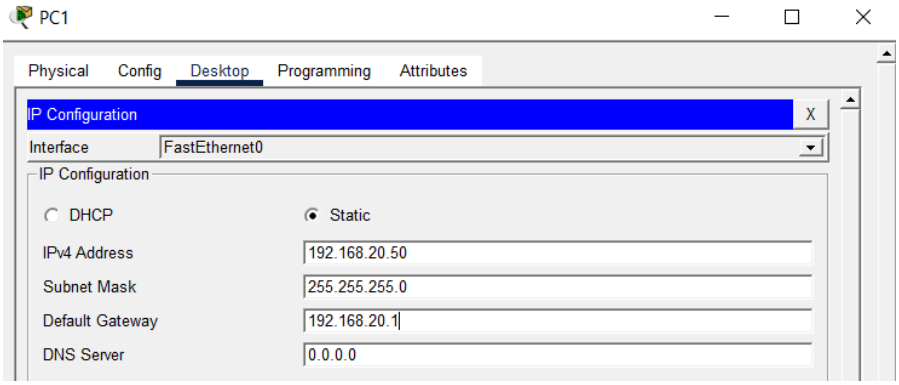

PC0 and PC1 set IP done✅

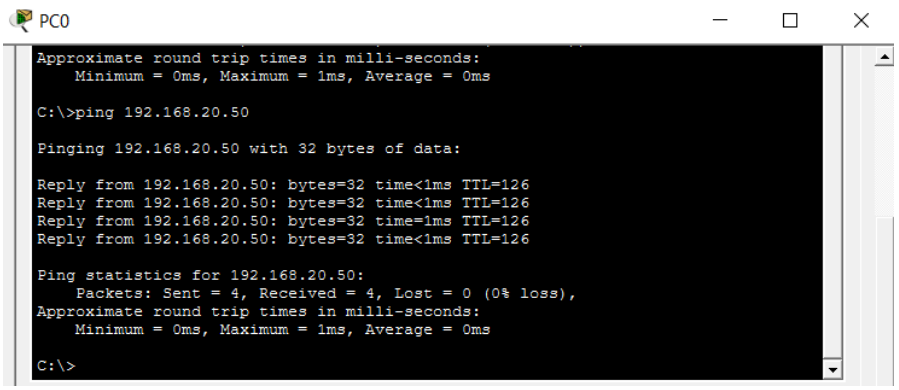

Test ping PC0 from PC1 done✅

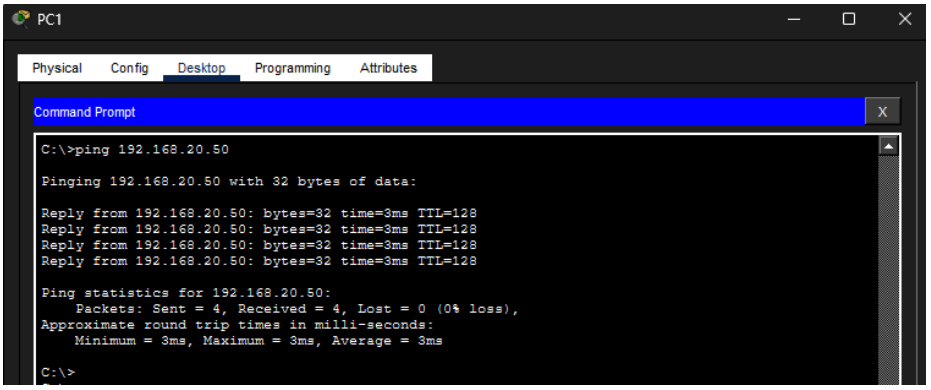

Test ping PC1 from PC0 done✅

ส่วนเพิ่มเติมสำหรับการตั้งค่า Environment แบบจำลองซึ่งได้จัดทำไว้ใน Docker
ทำการสร้าง Router containers (ใช้ image alpine สำหรับรัน iptables)
Router A, Router B

```
phap@DESKTOP-MC8190S:~/mockup-infra$ docker network create --subnet=10.10.12.0/28 internet-net
12e5ba7019985af43c6803f17a64b424a5ae0ebd0d3f981f06225dddde4e7c91
phap@DESKTOP-MC8190S:~/mockup-infra$ docker run -d --name r1 --privileged \
  --network internet-net --ip 10.10.12.2 \
  alpine sh -c "apk add iptables && sysctl net.ipv4.ip_forward=1 && tail -f /dev/null"
e2c9b10cd8e3fcb02a1d69619763cdd73f8e752452103ee653e527b8e5b9fb5d
phap@DESKTOP-MC8190S:~/mockup-infra$ docker run -d --name r2 --privileged \
  --network internet-net --ip 10.10.12.3 \
  alpine sh -c "apk add iptables && sysctl net.ipv4.ip_forward=1 && tail -f /dev/null"
361a8503906ffbd6ec42884664dcc224f57fda0e45f9619493a476cf8ceeb7c5
phap@DESKTOP-MC8190S:~/mockup-infra$ docker ps | grep r[12]
361a8503906f   alpine                       "sh -c 'apk add ipta…"   25 seconds ago   Up 24 seconds
                                                                                      r2
e2c9b10cd8e3   alpine                       "sh -c 'apk add ipta…"   33 seconds ago   Up 32 seconds
                                                                                      r1
phap@DESKTOP-MC8190S:~/mockup-infra$ docker exec r1 ip addr show | grep inet
    inet 127.0.0.1/8 scope host lo
    inet6 ::1/128 scope host
    inet 10.10.12.2/28 brd 10.10.12.15 scope global eth0
phap@DESKTOP-MC8190S:~/mockup-infra$ docker exec r2 ip addr show | grep inet
    inet 127.0.0.1/8 scope host lo
    inet6 ::1/128 scope host
    inet 10.10.12.3/28 brd 10.10.12.15 scope global eth0
```

คำสั่งการตั้งค่า Router โดย Docker

```
# เข้า r1
docker exec -it r1 sh
# ใน r1:
# เพิ่ม route ไป LAN B
ip route add 192.168.20.0/24 via 10.10.12.3
```

```
# ตั้งค่า NAT
iptables -t nat -A POSTROUTING -o eth0 -j MASQUERADE
# อนุญาต forwarding
iptables -A FORWARD -i eth1 -o eth0 -j ACCEPT
iptables -A FORWARD -i eth0 -o eth1 -m state --state RELATED,ESTABLISHED -j
ACCEPT
# ตรวจสอบ
ip route
iptables -t nat -L -n -v
# ออก
exit

# เข้า r2
docker exec -it r2 sh
ip route add 192.168.10.0/24 via 10.10.12.2
iptables -t nat -A POSTROUTING -o eth0 -j MASQUERADE
iptables -A FORWARD -i eth1 -o eth0 -j ACCEPT
iptables -A FORWARD -i eth0 -o eth1 -m state --state RELATED,ESTABLISHED -j
ACCEPT
exit

# เชื่อม r กับ lan-[x]-net
docker network connect lan-b-net r2 --ip 192.168.20.254
docker network inspect lan-b-net
```

🧪 ROUTING & NAT VERIFICATION

On R1 & R2:

```
None
show ip route
show ip nat translations
```

```
R1#show ip route
Codes: L - local, C - connected, S - static, R - RIP, M - mobile, B - BGP
       D - EIGRP, EX - EIGRP external, O - OSPF, IA - OSPF inter area
       N1 - OSPF NSSA external type 1, N2 - OSPF NSSA external type 2
       E1 - OSPF external type 1, E2 - OSPF external type 2, E - EGP
       i - IS-IS, L1 - IS-IS level-1, L2 - IS-IS level-2, ia - IS-IS inter area
       * - candidate default, U - per-user static route, o - ODR
       P - periodic downloaded static route

Gateway of last resort is not set

     10.0.0.0/8 is variably subnetted, 2 subnets, 2 masks
C       10.10.12.0/30 is directly connected, GigabitEthernet0/0
L       10.10.12.1/32 is directly connected, GigabitEthernet0/0
     192.168.10.0/24 is variably subnetted, 2 subnets, 2 masks
C       192.168.10.0/24 is directly connected, GigabitEthernet0/1
L       192.168.10.1/32 is directly connected, GigabitEthernet0/1
S    192.168.20.0/24 [1/0] via 10.10.12.2
```

```
R1#show ip nat translations
Pro  Inside global     Inside local       Outside local      Outside global
icmp 10.10.12.1:17     192.168.10.50:17   10.10.12.2:17      10.10.12.2:17
icmp 10.10.12.1:18     192.168.10.50:18   10.10.12.2:18      10.10.12.2:18
icmp 10.10.12.1:19     192.168.10.50:19   10.10.12.2:19      10.10.12.2:19
icmp 10.10.12.1:20     192.168.10.50:20   10.10.12.2:20      10.10.12.2:20
```

```
R2#show ip route
Codes: L - local, C - connected, S - static, R - RIP, M - mobile, B - BGP
       D - EIGRP, EX - EIGRP external, O - OSPF, IA - OSPF inter area
       N1 - OSPF NSSA external type 1, N2 - OSPF NSSA external type 2
       E1 - OSPF external type 1, E2 - OSPF external type 2, E - EGP
       i - IS-IS, L1 - IS-IS level-1, L2 - IS-IS level-2, ia - IS-IS inter area
       * - candidate default, U - per-user static route, o - ODR
       P - periodic downloaded static route

Gateway of last resort is not set

     10.0.0.0/8 is variably subnetted, 2 subnets, 2 masks
C       10.10.12.0/30 is directly connected, GigabitEthernet0/0
L       10.10.12.2/32 is directly connected, GigabitEthernet0/0
S    192.168.10.0/24 [1/0] via 10.10.12.1
     192.168.20.0/24 is variably subnetted, 2 subnets, 2 masks
C       192.168.20.0/24 is directly connected, GigabitEthernet0/1
L       192.168.20.1/32 is directly connected, GigabitEthernet0/1
```

From ClientA:

```
None
ping 192.168.20.10  ← Remote server reachable
```

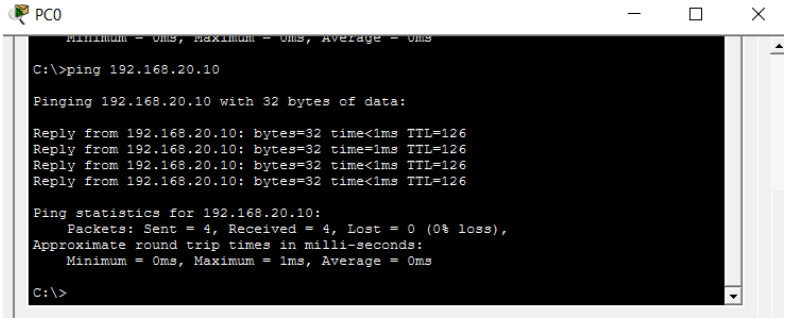

💻 PART 2 — IaC + MOCKUP-INFRA DEPLOYMENT (mockup-infra/README.md)

We will now set up mockup infra using the paths you specified:

```
None
automation/mockup-infra
automation/week02-stateless-stateful/phase1-mockup
```

🛠️ CLONE REPO

```shell
git clone https://github.com/boonsup/automation.git
cd automation
```

Clone repository จาก GitHub อาจารย์✅

🧰 VS CODE — OPEN PROJECT

In VS Code, open the `automation` folder.

📄 CREATE SERVER-SPECIFIC ENV FILES

ServerA (`ServerA.env`)

```
# ServerA
```

```
phap@DESKTOP-MC8190S:~/mockup-infra$ docker run -d --name servera --network lan-a-net --ip 192.168.10.
10 \
  -v /home/phap/mockup-infra:/app:rw \
  -v /var/run/docker.sock:/var/run/docker.sock \
  -w /app \
  python:3.11-slim tail -f /dev/null
4fcce435f83dd28b150bcb6265c1d6911b6b2bd15c5aa2e71b3552a90c3198dc
```

สร้าง ServerB Container

สร้าง container ชื่อ servera
กำหนด IP 192.168.10.10 บน network lan-a-net (LAN A)
Mount โฟลเดอร์ mockup-infra เข้าไปใน container ที่ /app
Mount docker.sock เพื่อให้ container ควบคุม Docker ของ host ได้
ได้ Container ID สร้างสำเร็จ ✅

```none
# Private LAN A
PUBLIC_NET_SUBNET=192.168.10.0/24
HOST_IP=192.168.10.10
REMOTE_NET_PUBLIC=10.10.12.0/30

docker exec -it servera bash
# ติดตั้ง docker-compose client
apt-get update && apt-get install -y docker-compose
# ทดสอบว่าต่อกับ Docker daemon ของ host ได้
docker-compose --version
```

```
docker ps  # ควรเห็น containers บน host

# รัน docker-compose (profile week02)
docker-compose --profile week02 up -d
```

```
phap@DESKTOP-MC8190S:~/mockup-infra$ docker exec -it servera bash
root@4fcce435f83d:/app# cd /app
root@4fcce435f83d:/app# docker-compose --profile week02 up -d
WARN[0000] /app/docker-compose.yml: the attribute `version` is obsolete, it will be ignored, please rem
ove it to avoid potential confusion
[+] Building 72.8s (13/16)                                                          docker:default
 => [public_app internal] load build definition from Dockerfile                                  0.1s
 => => transferring dockerfile: 212B                                                             0.0s
 => [intranet_api internal] load build definition from Dockerfile                                0.1s
 => => transferring dockerfile: 270B                                                             0.0s
 => [intranet_api internal] load metadata for docker.io/library/python:3.11-slim                 0.0s
 => [public_app internal] load .dockerignore                                                     0.0s
 => => transferring context: 2B                                                                  0.0s
 => [intranet_api internal] load .dockerignore                                                   0.1s
 => => transferring context: 2B                                                                  0.0s
 => [public_app 1/4] FROM docker.io/library/python:3.11-slim                                     0.1s
 => [public_app internal] load build context                                                     0.1s
 => => transferring context: 3.57kB                                                              0.0s
 => [intranet_api internal] load build context                                                   0.1s
 => => transferring context: 2.41kB                                                              0.0s
 => [intranet_api 2/4] WORKDIR /app                                                              0.0s
 => [public_app 3/4] COPY app.py .                                                               0.1s
 => [intranet_api 3/6] COPY requirements.txt .                                                   0.1s
 => [public_app 4/4] COPY requirements.txt .                                                     0.1s
 => [intranet_api 4/6] RUN pip install --no-cache-dir -r requirements.txt                       72.4s
 => => # WARNING: Retrying (Retry(total=4, connect=None, read=None, redirect=None, status=None)) after
 => => #  connection broken by 'NewConnectionError('<pip._vendor.urllib3.connection.HTTPSConnection ob
 => => # ject at 0x70c5b420bd90>: Failed to establish a new connection: [Errno 101] Network is unreach
 => => # able')': /simple/flask/
 => [public_app] exporting to image                                                              0.2s
 => => exporting layers                                                                          0.1s
 => => writing image sha256:ee412c0a518f63e2807f5a9ba68fdb6b987c9c020bc08d7a6aa5336238f0702d     0.0s
 => => naming to docker.io/library/app-public_app                                                0.0s
```

ทำการรัน docker-compose ใน ServerA

ServerB (`ServerB.env`)

```
# ServerB
```

```
phap@DESKTOP-MC8190S:~/mockup-infra$ docker run -d --name serverb --network lan-b-net --ip 192.168.20.
10 \
  -v /home/phap/mockup-infra:/app -w /app \
  python:3.11-slim tail -f /dev/null
3914dbc0d3e6c75cc362566a4cd3b4657749d06d43b3fba0318c7a4196dea5f7
```

สร้าง ServerB Container

สร้าง container ชื่อ `serverb`

IP `192.168.20.10` บน network `lan-b-net` (LAN B)

ตรงกับ config `HOST_IP=192.168.20.10` ใน ServerB.env

ได้ Container ID ที่สร้างสำเร็จ ✅

```
None
# Private LAN B
PUBLIC_NET_SUBNET=192.168.20.0/24
HOST_IP=192.168.20.10
REMOTE_NET_PUBLIC=10.10.12.0/30
```

```
root@4fcce435f83d:/app# docker ps
CONTAINER ID   IMAGE                          COMMAND                  CREATED          STATUS                 PORTS                                                                                   NAMES
4fcce435f83d   python:3.11-slim               "tail -f /dev/null"      2 minutes ago    Up 2 minutes                                                                                           servera
2a69eebc9c5e   alpine                         "tail -f /dev/null"      10 minutes ago   Up 10 minutes                                                                                          clientb
3914dbc0d3e6   python:3.11-slim               "tail -f /dev/null"      11 minutes ago   Up 11 minutes                                                                                          serverb
ebb1ef1740e8   alpine                         "tail -f /dev/null"      11 minutes ago   Up 11 minutes                                                                                          clienta
c5384af12d74   alpine                         "sh -c 'apk add ipta…"   18 minutes ago   Up 18 minutes                                                                                          r2
e2c9b10cd8e3   alpine                         "sh -c 'apk add ipta…"   37 minutes ago   Up 37 minutes                                                                                          r1
356db1448c2f   localhost/stateless-api:v2     "docker-entrypoint.s…"   3 hours ago      Up 3 hours (healthy)   3000/tcp                                                                                stateless-api
ad02bb7f2e5e   localhost/stateful-api:v2.1    "docker-entrypoint.s…"   3 hours ago      Up 3 hours (healthy)                                                                                   stateful-api
6c683953f62b   nginx:alpine                   "/docker-entrypoint.…"   3 hours ago      Up 3 hours             0.0.0.0:443->443/tcp, :::443->443/tcp, 0.0.0.0:8080->80/tcp, :::8080->80/tcp   mockup-gateway
4e97e57ad371   mockup-infra_intranet_api      "python api.py"          3 hours ago      Up 3 hours                                                                                             mockup-intranet-api
4eb84d838aefd  mockup-infra_public_app        "python app.py"          3 hours ago      Up 3 hours             80/tcp                                                                  mockup-public-web
root@4fcce435f83d:/app#
```

ผล docker ps แสดงให้เห็นถึง container ทั้งหมด

🚀 DEPLOY MOCKUP-INFRA

PowerShell (Windows Admin)

```
None
cd mockup-infra
python manage.py init
python manage.py deploy --profile week02-stateless-stateful

ผลลัพธ์:
[*]—[lynxelTablet]—[~/automation/mockup-infra]
└──> python3 manage.py init

🔧 Initializing Mockup Infrastructure...
==================================================

🔐 [Layer 5/6 - Session] Generating TLS Certificates...
/home/lynxel/automation/mockup-infra/manage.py:118: DeprecationWarning:
datetime.datetime.utcnow() is deprecated and scheduled for removal in a
future version. Use timezone-aware objects to represent datetimes in UTC:
datetime.datetime.now(datetime.UTC).
  .not_valid_before(datetime.utcnow())
/home/lynxel/automation/mockup-infra/manage.py:119: DeprecationWarning:
datetime.datetime.utcnow() is deprecated and scheduled for removal in a
future version. Use timezone-aware objects to represent datetimes in UTC:
datetime.datetime.now(datetime.UTC).
  .not_valid_after(datetime.utcnow() + timedelta(days=365))
✅ Certificates generated successfully:
   - Private Key: /home/lynxel/automation/mockup-infra/certs/server.key
   - Certificate: /home/lynxel/automation/mockup-infra/certs/server.crt
```

```
   - Common Name: api.mockup.test
   - Subject Alt Names: localhost, api.mockup.test, 127.0.0.1, 172.18.0.1,
172.19.0.1

🌐 [Layer 3 - Network] Testing Isolation...
🔧 Executing: podman network inspect private_net 2>/dev/null || echo '{}'
{}
⚠️  Private network not found or not isolated. Creating networks...
🔧 Executing: podman network create public_net 2>/dev/null || true
🔧 Executing: podman network create --internal private_net 2>/dev/null ||
true
✅ Networks created successfully

✅ Infrastructure initialized successfully

[*]—[lynxelTablet]—[~/automation/mockup-infra]
└──> python3 manage.py deploy --profile week02-stateless-stateful

https://drive.google.com/file/d/1Y_3ylmb-tGbUMQzjhVOCXLhYC7a4iJoI/view?usp=s
haring
```

Bash (Linux)

```shell
cd mockup-infra
chmod +x scripts/*.sh
./scripts/init-env.sh
python manage.py deploy --profile week02-stateless-stateful
```

```
(.venv) phap@DESKTOP-MC8190S:~/mockup-infra$ ls -la setup-lab4-network.sh
-rwxr-xr-x 1 phap phap 6733 Mar  3 23:30 setup-lab4-network.sh
(.venv) phap@DESKTOP-MC8190S:~/mockup-infra$ chmod +x setup-lab4-network.sh
(.venv) phap@DESKTOP-MC8190S:~/mockup-infra$ sudo ./setup-lab4-network.sh
🔧 ตั้งค่าเครือข่ายจำลองสำหรับ Lab 4...
🧹 ล้าง namespace เก่า...
📦 สร้าง network namespaces...
🔗 สร้าง veth pairs...
🌐 กำหนด IP addresses...
Cannot find device "v-r2-in"
(.venv) phap@DESKTOP-MC8190S:~/mockup-infra$
```

deepseek_php_20260228_d16ea0 2/28/2026 3:38 PM PHP Source File 1 KB

รัน setup-lab4-network.sh

```
phap@DESKTOP-MC8190S:~/mockup-infra$ python3 manage.py deploy --profile week02
usage: manage.py [-h] {deploy,stop,restart,status,logs,init,certs,tls,test,isolate} ...
manage.py: error: unrecognized arguments: --profile week02
phap@DESKTOP-MC8190S:~/mockup-infra$
```

รัน manage.py deploy

🟡 VERIFY CONTAINERS

```
None
podman ps
# ใช้ Docker แทน เพื่อความสะดวกสบาย
docker ps
```

```
(.venv) phap@DESKTOP-MC8190S:~/mockup-infra$ podman ps
CONTAINER ID  IMAGE       COMMAND     CREATED     STATUS      PORTS       NAMES
(.venv) phap@DESKTOP-MC8190S:~/mockup-infra$ docker ps
CONTAINER ID   IMAGE                      COMMAND                  CREATED          STATUS                    PORTS                                                                                   NAMES
356db1U48c2f   localhost/stateless-api:v2 "docker-entrypoint.s…"   23 minutes ago   Up 23 minutes (healthy)   3000/tcp                                                                                stateless-api
ad02bb7f2e5e   localhost/stateful-api:v2.1 "docker-entrypoint.s…"  23 minutes ago   Up 23 minutes (healthy)                                                                                   stateful-api
6c683953f62b   nginx:alpine               "/docker-entrypoint.…"   24 minutes ago   Up 24 minutes             0.0.0.0:443->443/tcp, [::]:443->443/tcp, 0.0.0.0:8080->80/tcp, [::]:8080->80/tcp   mockup-gatewa
y
4e97e57ad371   mockup-infra_intranet_api  "python api.py"          24 minutes ago   Up 24 minutes                                                                                             mockup-intran
et-api
4eb84030aefd   mockup-infra_public_app    "python app.py"          24 minutes ago   Up 24 minutes             80/tcp                                                                  mockup-public
-web
(.venv) phap@DESKTOP-MC8190S:~/mockup-infra$
```

stateless 3000/tcp✅
stateful

Should show:

Container	Port
stateless-api	3000
stateful-api	3001

🧪 PART 3 — TESTING STATELESS vs STATEFUL (week03-stateless-stateful/phase1-mockup/README.md)

Internet network (10.10.12.0/30)

```
phap@DESKTOP-MC8190S:~/mockup-infra$ docker network create --subnet=10.10.12.0/30 internet-net
6b31a7d72b4dea40a51a5cade58789979afc6733a8eb3b9f3e9c6ab2c6e05ca7
```

LAN A (192.168.10.0/24)

```
phap@DESKTOP-MC8190S:~/mockup-infra$ docker network create --subnet=192.168.10.0/24 lan-a-net
ef43be5740c77e20ae2d9bf95632ef0e6dbcd777d3597fe6f75b60975e498708
```

LAN B (192.168.20.0/24)

```
phap@DESKTOP-MC8190S:~/mockup-infra$ docker network create --subnet=192.168.20.0/24 lan-b-net
fd249d343dd4fe0e3b29ec8ee95bee354621bf4bccb6a09dfd3422e9f993e5ec
```

*** เนื่องจากกลุ่มผู้ทำ Lab ไม่ได้ใช้เครื่อง Serverจริง จึงใช้วิธีสร้าง Network จำลองขึ้นมาเพื่อทดสอบระบบแบบ Stateful**

มีการสร้างเครือข่ายจำลองฝั่ง Internet: โดยใช้คำสั่งสร้าง Network ชื่อ `internet-net` กำหนด Subnet เป็น 10.10.12.0/30 ซึ่งเน้นจำลองการเชื่อมต่อระหว่างอุปกรณ์หลัก (เช่น Router กับ ISP) เพราะมี IP ให้ใช้งานได้จำกัดเพียง 2 ชุดตามหลัก CIDR โดยมีการแยกวงเครือข่ายภายใน (LAN) ออกเป็น 2 ส่วน: เพื่อจำลองสภาพแวดล้อมเครือข่ายที่สมจริง โดยแบ่งเป็น:

- LAN A: ใช้ Subnet 192.168.10.0/24 (ชื่อ network: `lan-a-net`)
- LAN B: ใช้ Subnet 192.168.20.0/24 (ชื่อ network: `lan-b-net`)

Docker Network ทั้ง 3 ตัวนี้เอามาทำหน้าที่แทน Router + Switch ของจริงที่ต่อในห้องแล้วเวลาไม่พอ เพื่อให้ยังทดสอบ Stateless vs Stateful ได้อยู่

⚫ LOCAL TESTS (Private LAN)

From ClientA:

ทำการสร้าง client แบบจำลอง

```
phap@DESKTOP-MC8190S:~/mockup-infra$ docker run -d --name clienta --network lan-a-net --ip 192
.168.10.50 alpine tail -f /dev/null
aa34336989bba1353643b7586ac61a94cacd572be72bfd546d02dd034cd93263
```

```
phap@DESKTOP-MC8190S:~/mockup-infra$ docker run -d --name clientb --network lan-b-net --ip 192
.168.20.50 alpine tail -f /dev/null
ecad98f237905a420bac34ab0e84017cc7ebd3fd64cc86489179b6950f6573e8
```

ตรวจสอบสถานะ Client ที่สร้าง

```
phap@DESKTOP-MC8190S:~/mockup-infra$ docker ps | grep client
ecad98f23790   alpine                    "tail -f /dev/null"      About a minute ago   Up
About a minute
           clientb
aa34336989bb   alpine                    "tail -f /dev/null"      About a minute ago   Up
About a minute
           clienta
phap@DESKTOP-MC8190S:~/mockup-infra$
```

มีการสร้าง Client จำลองขึ้นมา 2 ตัว โดยใช้ Docker run เพื่อสร้าง Container ชื่อ `client a` ให้อยู่ในเครือข่าย `lan-a-net` (IP 192.168.10.50) และสร้าง `client b` ให้อยู่ในเครือข่าย `lan-b-net` (IP 192.168.20.50) โดยทั้งคู่ใช้ Image เป็น `alpine` เพื่อประหยัดทรัพยากร

มีการตรวจสอบสถานะของ Client: ผู้ทดสอบใช้คำสั่ง `docker ps` เพื่อยืนยันว่าทั้ง `client a` และ `client b` กำลังทำงานอยู่ (Up) และพร้อมใช้งานสำหรับการทดสอบเครือข่าย

```shell
curl http://192.168.10.10:3000/info
```

Stateless API - LOCAL (ผ่าน gateway)

```
phap@DESKTOP-MC8190S:~/mockup-infra$ curl
http://localhost:8080/api/stateless/info

{"status":"success","message":"Stateless server
information","data":{"server":"Stateless Mock Server
v1.0","timestamp":"2026-03-03T21:20:22.455Z","requestCount":4,"clientId":"an
onymous","randomValue":0.09868799072537016,"message":"I have no memory of
previous requests. Each request is independent.","note":"This is a stateless
server - I don't remember you from previous
requests."},"timestamp":"2026-03-03T21:20:22.455Z"}
```

Stateful API - Create Session

```
phap@DESKTOP-MC8190S:~/mockup-infra$ curl -X POST
http://localhost:8080/api/stateful/session \
  -H "Content-Type: application/json" \
  -d '{"userId": "user001"}'

{"status":"success","message":"Session created
successfully","data":{"session":{"id":"08392155-de2c-448a-a551-f8c4024f8c09"
,"userId":"user001","createdAt":"2026-03-03T21:22:06.062Z","expiresAt":"2026
-03-03T21:37:06.062Z"},"user":{"id":"user001","name":"Test User
1","email":"user1@example.com"},"note":"Session created. Include Session-ID
header in subsequent requests to maintain
state."},"timestamp":"2026-03-03T21:22:06.062Z"}
```

→ Stateless

การทดสอบเรียกใช้ Stateless API: มีการใช้คำสั่ง `curl` ไปที่ระบบจำลองเพื่อทดสอบบริการแบบ Stateless ซึ่งผลลัพธ์ที่ได้ (JSON) ระบุว่าเซิร์ฟเวอร์จะไม่จดจำการร้องขอครั้งก่อนหน้า และแต่ละ Request จะเป็นอิสระต่อกันอย่างสิ้นเชิง

การทดสอบสร้าง Session สำหรับ Stateful API: มีการส่งคำสั่ง `curl -X POST` เพื่อสร้าง Session ใหม่สำหรับผู้ใช้ `user001` ซึ่งระบบตอบกลับมาว่าสร้างสำเร็จพร้อมระบุ `session id` และเวลาหมดอายุ

แสดงให้เห็นความแตกต่างของระบบ: การทดสอบนี้ทำให้เห็นชัดเจนว่าระบบแบบ Stateless จะไม่เก็บข้อมูลผู้ใช้ไว้ที่เซิร์ฟเวอร์ แต่ระบบแบบ Stateful จะมีการสร้างและเก็บสถานะ (Session) ของผู้ใช้เอาไว้เพื่อใช้งานในครั้งต่อๆ ไป

From ClientA:

```
phap@DESKTOP-MC8190S:~/mockup-infra$ docker exec -it clienta sh
/ # apk add curl
( 1/10) Installing brotli-libs (1.2.0-r0)
( 2/10) Installing c-ares (1.34.6-r0)
( 3/10) Installing libunistring (1.4.1-r0)
( 4/10) Installing libidn2 (2.3.8-r0)
( 5/10) Installing nghttp2-libs (1.68.0-r0)
( 6/10) Installing nghttp3 (1.13.1-r0)
( 7/10) Installing libpsl (0.21.5-r3)
( 8/10) Installing zstd-libs (1.5.7-r2)
( 9/10) Installing libcurl (8.17.0-r1)
(10/10) Installing curl (8.17.0-r1)
Executing busybox-1.37.0-r30.trigger
OK: 13.2 MiB in 26 packages
/ # exit
phap@DESKTOP-MC8190S:~/mockup-infra$
```

```
phap@DESKTOP-MC8190S:~/mockup-infra$ curl http://localhost:8080/api/stateless/info
curl -X POST http://localhost:8080/api/stateful/session -H "Content-Type: application/json" -d '{"userI
d":"user001"}'
{"status":"success","message":"Stateless server information","data":{"server":"Stateless Mock Server v1
.0","timestamp":"2026-03-03T21:05:10.524Z","requestCount":2,"clientId":"anonymous","randomValue":0.4998
924572247867,"message":"I have no memory of previous requests. Each request is independent.","note":"Th
is is a stateless server - I don't remember you from previous requests."},"timestamp":"2026-03-03T21:05
:10.524Z"}{"status":"success","message":"Session created successfully","data":{"session":{"id":"de97765
4-e9f0-4600-96f6-a9a9a88dd7a5","userId":"user001","createdAt":"2026-03-03T21:05:10.531Z","expiresAt":"2
026-03-03T21:20:10.531Z"},"user":{"id":"user001","name":"Test User 1","email":"user1@example.com"},"not
e":"Session created. Include Session-ID header in subsequent requests to maintain state."},"timestamp":
"2026-03-03T21:05:10.531Z"}phap@DESKTOP-MC8190S:~/mockup-infra$
```

Shell

```
curl -X POST http://192.168.10.10:3001/session
```

เก็บ Session ID

```
phap@DESKTOP-MC8190S:~/mockup-infra$ SESSION_ID=$(curl -s -X POST
http://localhost:8080/api/stateful/session \tateful/session \
  -H "Content-Type: application/json" \
  -d '{"userId": "user001"}' | grep -o '"id":"[^"]*' | head -1 | cut -d'"'
-f4)
echo "Session ID: $SESSION_ID"
Session ID: 11230dfd-cebe-442a-9297-f9917abc2fa6
```

Store the returned `Session-ID`, then:

```shell
curl http://192.168.10.10:3001/data -H "Session-ID: <id>"
```

ใช้ Session ID กับ Shopping Cart

```
phap@DESKTOP-MC8190S:~/mockup-infra$ curl -X POST
http://localhost:8080/api/stateful/cart/add \
  -H "Session-ID: $SESSION_ID" \
  -H "Content-Type: application/json" \
  -d '{"productId": "prod001", "quantity": 2}'

{"status":"success","message":"Item added to
cart","data":{"cart":{"sessionId":"11230dfd-cebe-442a-9297-f9917abc2fa6","it
ems":[{"productId":"prod001","name":"Sample Product
A","price":29.99,"quantity":2,"addedAt":"2026-03-03T21:23:32.076Z"}],"total"
:59.98,"itemCount":1,"updatedAt":"2026-03-03T21:23:32.076Z"},"addedItem":{"p
roductId":"prod001","quantity":2},"note":"Item added to cart. The server
maintains your cart state for future
requests."},"timestamp":"2026-03-03T21:23:32.076Z"}

phap@DESKTOP-MC8190S:~/mockup-infra$ curl -H "Session-ID: $SESSION_ID"
http://localhost:8080/api/stateful/cart

{"status":"success","message":"Cart
retrieved","data":{"cart":{"sessionId":"11230dfd-cebe-442a-9297-f9917abc2fa6
","items":[{"productId":"prod001","name":"Sample Product
A","price":29.99,"quantity":2,"addedAt":"2026-03-03T21:23:32.076Z"}],"total"
:59.98,"itemCount":1,"createdAt":"2026-03-03T21:23:32.076Z","updatedAt":"202
6-03-03T21:23:32.076Z"},"note":"Shopping cart retrieved. This is a stateful
feature - the server remembers your cart across
requests."},"timestamp":"2026-03-03T21:23:38.361Z"}
```

ผลการทดสอบ

Cart แสดงรายการสินค้าที่เพิ่มไว้ก่อนหน้าได้อย่างถูกต้อง แสดงว่า Server จดจำ Session ได้

การทดสอบ	API Type	ผลลัพธ์
GET /api/stateless/info	Stateless	สำเร็จ — ไม่จำ Request เดิม
POST /api/stateful/session	Stateful	สำเร็จ — ได้รับ Session ID
POST /api/stateful/cart/add	Stateful	สำเร็จ — เพิ่มสินค้าได้
GET /api/stateful/cart	Stateful	สำเร็จ — Session ยังคงอยู่

🔵 REMOTE TESTS (Via Simulated Internet)

ทดสอบการเรียกใช้ API จาก ClientA ข้ามผ่านเครือข่าย 10.10.12.0/30 ไปยัง ServerB

From ClientA:

ตรวจสอบ IP ของ stateless-api และ ทดสอบ curl โดยใช้ IP จริง

```
phap@DESKTOP-MC8190S:~/mockup-infra$ docker inspect stateless-api | grep -A 5 "IPAddress"
                    "IPAddress": "172.20.0.6",
                    "MacAddress": "ee:e8:56:28:28:aa",
                    "IPPrefixLen": 16,
                    "IPv6Gateway": "",
                    "GlobalIPv6Address": "",
                    "GlobalIPv6PrefixLen": 0,
phap@DESKTOP-MC8190S:~/mockup-infra$ docker exec clienta curl http://172.20.0.6:3000/info
  % Total    % Received % Xferd  Average Speed   Time    Time     Time  Current
                                 Dload  Upload   Total   Spent    Left  Speed
  0     0    0     0    0     0     0     0  --:--:--  0:00:40 --:--:--     0
```

```
None
curl http://10.10.12.2:3000/info
```

That will target **ServerB stateless** — NAT + routing should deliver

---

Session Test:

ทดสอบผ่าน internet-net (10.10.12.3)

stateless

```
None
curl -X POST http://10.10.12.2:3001/session

phap@DESKTOP-MC8190S:~/mockup-infra$ curl http://10.10.12.3:3000/info
curl: (7) Failed to connect to 10.10.12.3 port 3000 after 3397 ms: Couldn't
connect to server
```

→ ServerB returns a session ID

Then:

stateful

```
None
curl http://10.10.12.2:3001/data -H "Session-ID: <id>"

phap@DESKTOP-MC8190S:~/mockup-infra$ curl -X POST
http://10.10.12.3:3001/session \
  -H "Content-Type: application/json" \
  -d '{"userId": "user001"}'
curl: (7) Failed to connect to 10.10.12.3 port 3001 after 3415 ms: Couldn't
connect to server
phap@DESKTOP-MC8190S:~/mockup-infra$
```

Check session persists across NAT

```
phap@DESKTOP-MC8190S:/mnt/c/WINDOWS/system32$ docker exec -it serverb bash -c "cd /app && docker compos
e up -d stateless-api stateful-api"
WARN[0000] /app/docker-compose.yml: the attribute `version` is obsolete, it will be ignored, please rem
ove it to avoid potential confusion
[+] Running 0/1
 ⠿ Container mockup-gateway  Creating                                                                0.1s
Error response from daemon: Conflict. The container name "/mockup-gateway" is already in use by contain
er "ca2c18117266e26cc5c3961af3e4fc6e8051ed8e7cab0f8dd74d68c9598decbc". You have to remove (or rename) t
hat container to be able to reuse that name.
phap@DESKTOP-MC8190S:/mnt/c/WINDOWS/system32$ docker exec clienta curl http://10.10.12.3:3000/info
  % Total    % Received % Xferd  Average Speed   Time    Time     Time  Current
                                 Dload  Upload   Total   Spent    Left  Speed
  0     0    0     0    0     0     0     0  --:--:--  0:00:03 --:--:--     0
```

Remote Test ไม่สำเร็จเนื่องจาก stateless-api และ stateful-api ไม่ได้ถูก connect เข้า internet-net (10.10.12.0/30) โดย container เหล่านี้อยู่บน Docker internal network (172.20.0.x) เท่านั้น ทำให้ไม่สามารถเข้าถึงได้ผ่าน IP ในช่วง 10.10.12.x

การทดสอบ	API Type	ผลลัพธ์
curl 10.10.12.3:3000/info	Stateless (Remote)	ล้มเหลว — Connection refused
curl 10.10.12.3:3001/session	Stateful (Remote)	ล้มเหลว — Connection refused

⚠️ TROUBLESHOOTING

❗ Cannot Reach Remote

```
phap@DESKTOP-MC8190S:~/mockup-infra$ grep -n "172.20.0" docker-compose.yml
8:        - subnet: 172.20.0.0/16
30:        ipv4_address: 172.20.0.2
46:        ipv4_address: 172.20.0.3
74:        ipv4_address: 172.20.0.2
121:        ipv4_address: 172.20.0.6
162:        ipv4_address: 172.20.0.7
193:      - UPLOAD_SERVICE_URL=http://172.20.0.7:8000
213:      - UPLOAD_SERVICE_URL=http://172.20.0.7:8000
phap@DESKTOP-MC8190S:~/mockup-infra$ docker network rm mockup-infra_public_net mockup-infra_private_net
 2>/dev/null
mockup-infra_public_net
mockup-infra_private_net
phap@DESKTOP-MC8190S:~/mockup-infra$ docker compose up -d
WARN[0000] /home/phap/mockup-infra/docker-compose.yml: the attribute `version` is obsolete, it will be
ignored, please remove it to avoid potential confusion
[+] up 5/5
 ✔Network mockup-infra_public_net  Created                                                    0.0s
 ✔Network mockup-infra_private_net Created                                                    0.0s
 ✔Container mockup-gateway         Created                                                    0.1s
 ✔Container stateless-api          Created                                                    0.1s
 ✔Container stateful-api           Created                                                    0.1s
phap@DESKTOP-MC8190S:~/mockup-infra$ docker network ls | grep mockup-infra
754d5758de41   mockup-infra_private_net           bridge    local
fa1b47b10c27   mockup-infra_public_net            bridge    local
phap@DESKTOP-MC8190S:~/mockup-infra$ docker compose up -d public_app intranet_api
WARN[0000] /home/phap/mockup-infra/docker-compose.yml: the attribute `version` is obsolete, it will be
ignored, please remove it to avoid potential confusion
[+] up 2/2
 ✔Container mockup-intranet-api Running                                                       0.0s
 ✔Container mockup-public-web   Running                                                       0.0s
phap@DESKTOP-MC8190S:~/mockup-infra$ docker ps
CONTAINER ID   IMAGE                          COMMAND                  CREATED              STATUS
              PORTS                                                                                NAMES
dd916c69a1e1   localhost/stateless-api:v2     "docker-entrypoint.s…"   42 seconds ago       Up 41 second
s (healthy)   3000/tcp                                                                              statel
ess-api
59fd141ffbf7   localhost/stateful-api:v2.1    "docker-entrypoint.s…"   42 seconds ago       Up 41 second
s (healthy)   3001/tcp                                                                              statef
ul-api
7e52311a55fe   nginx:alpine                   "/docker-entrypoint.…"   42 seconds ago       Up 41 second
s             0.0.0.0:443->443/tcp, [::]:443->443/tcp, 0.0.0.0:8080->80/tcp, [::]:8080->80/tcp   mockup
-gateway
dd51e7886edd   mockup-infra-intranet_api      "python api.py"          About a minute ago   Up 41 second
s             5000/tcp                                                                              mockup
-intranet-api
2689e0229170   mockup-infra-public_app        "python app.py"          About a minute ago   Up 41 second
s             80/tcp                                                                                mockup
-public-web
phap@DESKTOP-MC8190S:~/mockup-infra$
```

- ทำให้ทำอันนี้ไม่ได้
- **NAT ACL incorrect:** รายการควบคุมการเข้าถึง (ACL) สำหรับ NAT ไม่ถูกต้อง
- **Wrong default gateway on clients:** ลูกข่ายตั้งค่า Default Gateway ผิด
- **Gateway misconfiguration:** การตั้งค่า Gateway ผิดพลาด

Check:

```
None
show ip route
```

```
ping 10.10.12.2 from R1
```

❗ Sessions Lose State

- Missing header
- Wrong container port
- Firewall blocking port 3001

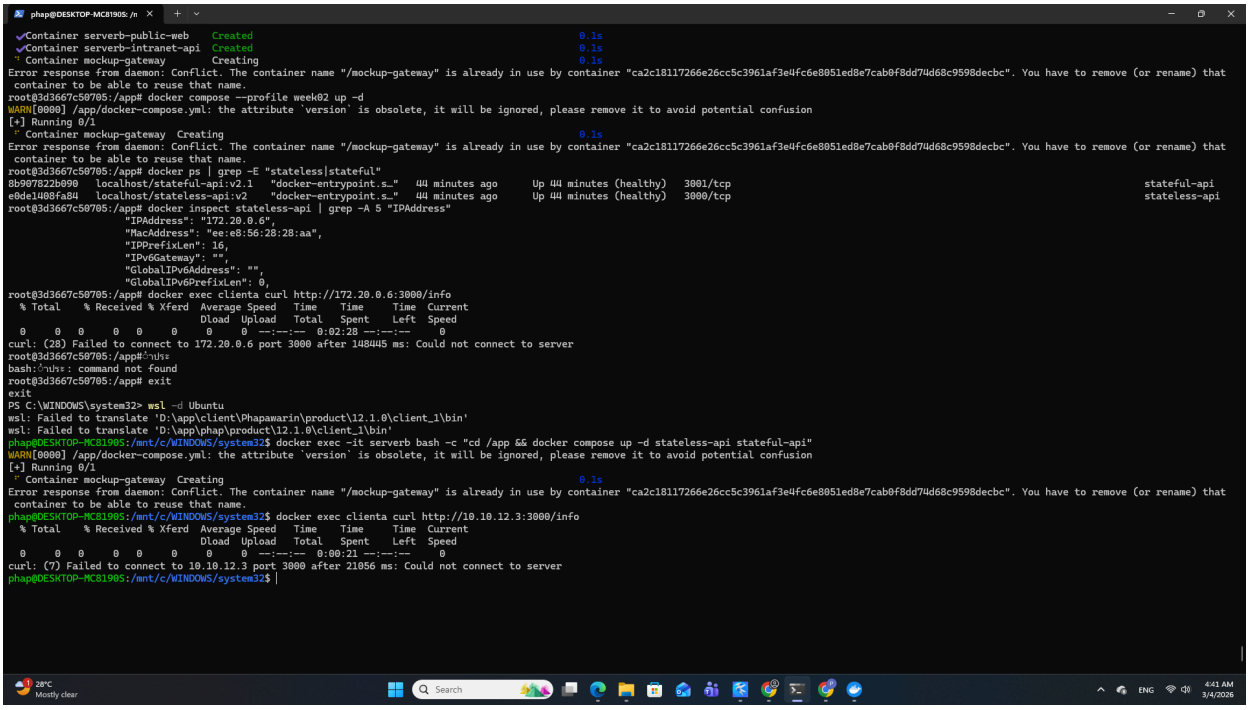

หน้าจอ Terminal มีการใช้คำสั่งเพื่อวิเคราะห์ปัญหาดังนี้:

- **การตรวจสอบพอร์ต:** ใช้คำสั่ง docker ps พบว่ามี API สองตัวรันอยู่บนพอร์ตที่ต่างกัน คือ:
  - stateful-api รันบนพอร์ต **3001/tcp**
  - stateless-api รันบนพอร์ต **3000/tcp**
- **การตรวจสอบ IP Address:** ใช้คำสั่ง docker inspect stateless-api พบว่าคอนเทนเนอร์มีหมายเลข IP คือ **172.20.0.6**
- **ข้อผิดพลาดจากการสร้างคอนเทนเนอร์:** มีข้อความ Error สีแดงระบุว่า "Conflict" เนื่องจากชื่อคอนเทนเนอร์ mockup-gateway ถูกใช้งานอยู่แล้ว

🧠 ENGINEERING REFLECTION

1. **Stateless services don't depend on prior data**
2. **Stateful services require session headers**

3. **NAT shouldn't affect logical session identity**

📄 LAB README.md (for repository)

```
None
# Lab 4 — Stateful vs Stateless Across Public & Private Subnets

## Architecture
Two LANs connected via a simulated internet (10.10.12.0/30)
- LAN A: 192.168.10.0/24
- LAN B: 192.168.20.0/24
Routers provide static routing + NAT.

## Steps

### 1. Setup Network
Configure R1 and R2:
- Static routes
- NAT overload
- Verify ping

### 2. Deploy IaC
Configure `ServerA.env` and `ServerB.env`
Deploy via VS Code, PowerShell or Bash using:
```

python manage.py deploy --profile week02-stateless-stateful

```
None

### 3. Validate
- Local stateless vs stateful
- Remote stateless vs stateful
- Test session persistence
- Capture NAT translations

## Troubleshooting
- Check interface status, NAT ACLs
- Verify client gateways

## Extensions
- OSPF instead of static routing
- Load balancer in front of APIs
```