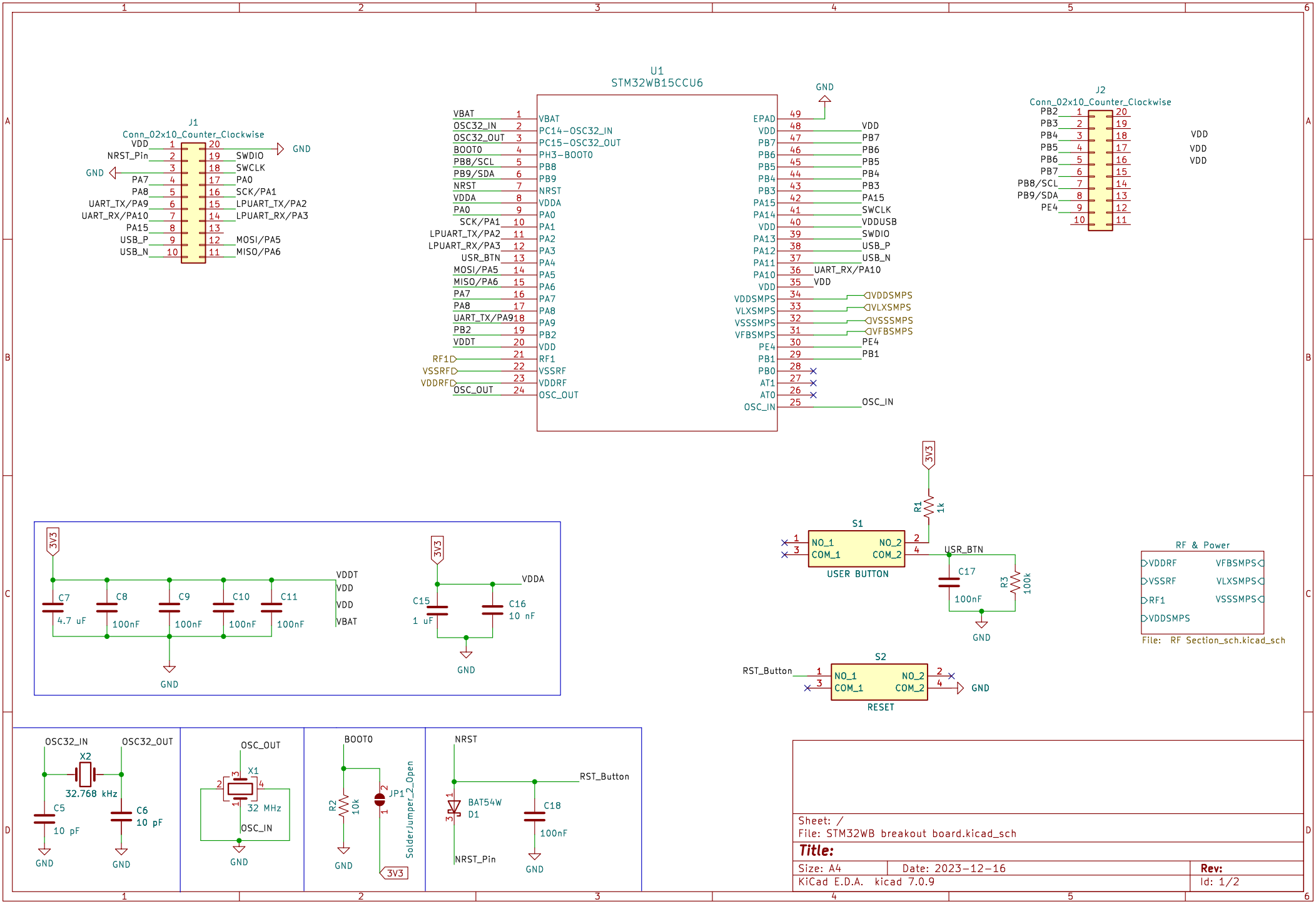
J1
Conn_02x10_Counter_Clockwise
VDD 1 20 GND
NRST_Pin 2 19 SWDIO
GND 3 18 SWCLK
PA7 4 17 PA0
PA8 5 16 SCK/PA1
UART_TX/PA9 6 15 LPUART_TX/PA2
UART_RX/PA10 7 14 LPUART_RX/PA3
PA15 8 13
USB_P 9 12 MOSI/PA5
USB_N 10 11 MISO/PA6
U1
STM32WB15CCU6
VBAT 1 VBAT
OSC32_IN 2 PC14-OSC32_IN
OSC32_OUT 3 PC15-OSC32_OUT
BOOT0 4 PH3-BOOT0
PB8/SCL 5 PB8
PB9/SDA 6 PB9
NRST 7 NRST
VDDA 8 VDDA
PA0 9 PA0
SCK/PA1 10 PA1
LPUART_TX/PA2 11 PA2
LPUART_RX/PA3 12 PA3
USR_BTN 13 PA4
MOSI/PA5 14 PA5
MISO/PA6 15 PA6
PA7 16 PA7
PA8 17 PA8
UART_TX/PA9 18 PA9
PB2 19 PB2
VDDT 20 VDD
RF1 21 RF1
VSSRF 22 VSSRF
VDDRF 23 VDDRF
OSC_OUT 24 OSC_OUT
EPAD 49 GND
VDD 48 VDD
PB7 47 PB7
PB6 46 PB6
PB5 45 PB5
PB4 44 PB4
PB3 43 PB3
PA15 42 PA15
PA14 41 SWCLK
VDD 40 VDDUSB
PA13 39 SWDIO
PA12 38 USB_P
PA11 37 USB_N
PA10 36 UART_RX/PA10
VDD 35 VDD
VDDSMPS 34 VDDSMPS
VLXSMPS 33 VLXSMPS
VSSSMPS 32 VSSSMPS
VFBSMPS 31 VFBSMPS
PE4 30 PE4
PB1 29 PB1
PB0 28
AT1 27
AT0 26
OSC_IN 25 OSC_IN
J2
Conn_02x10_Counter_Clockwise
PB2 1 20
PB3 2 19
PB4 3 18 VDD
PB5 4 17 VDD
PB6 5 16 VDD
PB7 6 15
PB8/SCL 7 14
PB9/SDA 8 13
PE4 9 12
10 11
3V3
C7 4.7 uF
C8 100nF
C9 100nF
C10 100nF
C11 100nF
VDDT
VDD
VDD
VBAT
GND
3V3
C15 1 uF
C16 10 nF
VDDA
GND
3V3
R1 1k
S1
NO_1 NO_2
COM_1 COM_2
USER BUTTON
USR_BTN
C17 100nF
R3 100k
GND
RF & Power
VDDRF
VSSRF
RF1
VDDSMPS
VFBSMPS
VLXSMPS
VSSSMPS
File: RF Section_sch.kicad_sch
RST_Button
S2
NO_1 NO_2
COM_1 COM_2
RESET
GND
OSC32_IN
OSC32_OUT
X2
32.768 kHz
C5 10 pF
C6 10 pF
GND
GND
OSC_OUT
X1
32 MHz
OSC_IN
GND
BOOT0
R2 10k
JP1
SolderJumper_2_Open
GND
3V3
NRST
RST_Button
BAT54W
D1
C18 100nF
NRST_Pin
GND
Sheet: /
File: STM32WB breakout board.kicad_sch
Title:
Size: A4
Date: 2023-12-16
Rev:
KiCad E.D.A. kicad 7.0.9
Id: 1/2

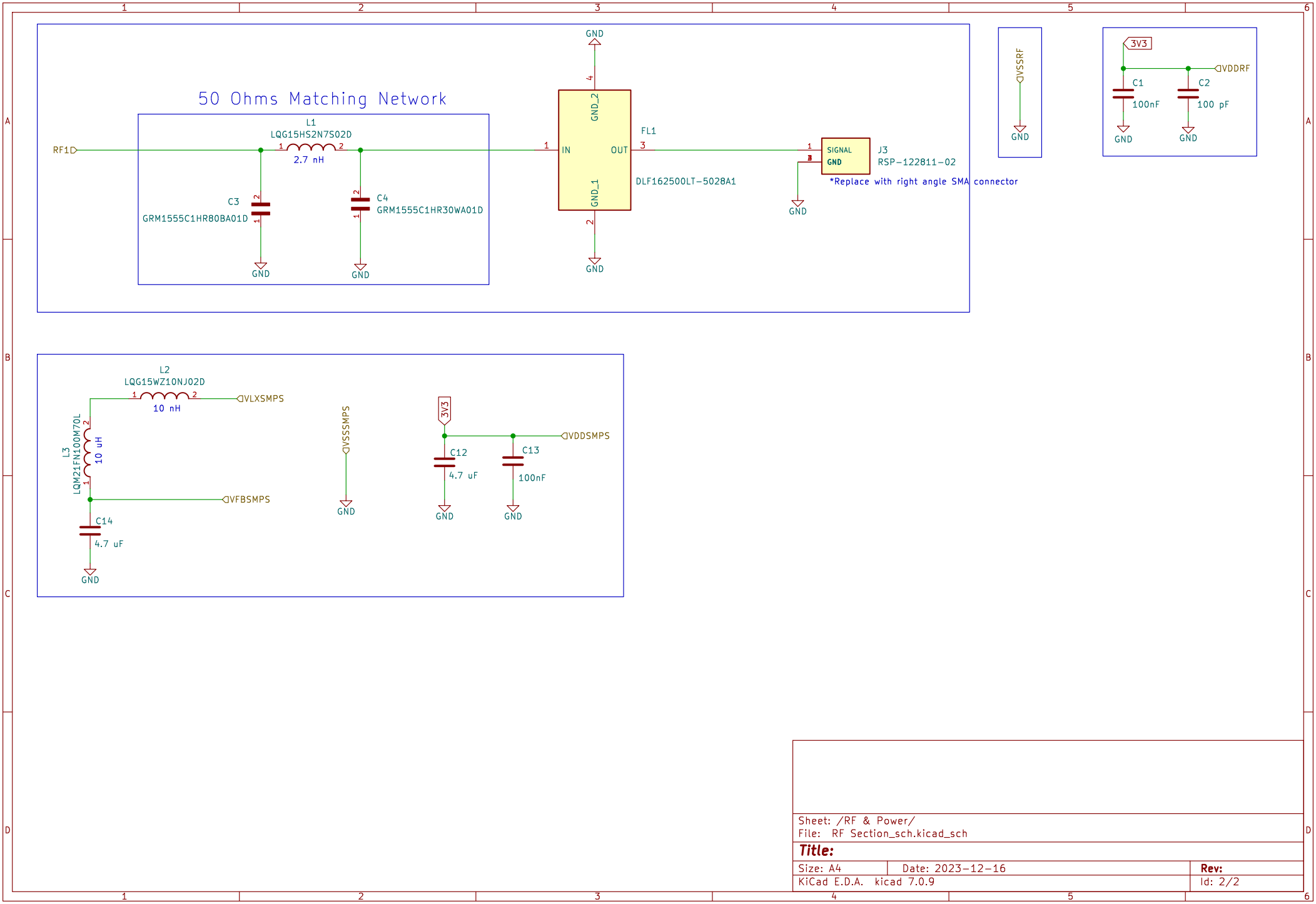

Sheet: /RF & Power/
File: RF Section_sch.kicad_sch

Title:

Size: A4	Date: 2023-12-16	Rev:
KiCad E.D.A. kicad 7.0.9		Id: 2/2