# HoneyShip: Unveiling Cyber Threats to Maritime VSAT Systems with a High-Interaction Honeypot

1st Stern Brouwer
*Bernoulli Institute*
*University of Groningen*
Groningen, the Netherlands
s.c.brouwer.1@student.rug.nl

2nd Jeroen Pijpker
*Bernoulli Institute*
*University of Groningen*
Groningen, the Netherlands
j.pijpker@rug.nl

3rd Fadi Mohsen
*Bernoulli Institute*
*University of Groningen*
Groningen, the Netherlands
0000-0003-3876-5781

2025 IEEE 8th International Conference on Industrial Cyber-Physical Systems (ICPS) | 979-8-3315-4299-3/25/$31.00 ©2025 IEEE | DOI: 10.1109/ICPS65515.2025.11087909

***Abstract*—The cybersecurity threats targeting the Global Maritime Transportation System (GMTS) have gained significant momentum, considering the number of reported attacks and resulting financial loss. The existing literature comes short when it comes to the understanding of the nature and methods of these threats. This study targets filling this gap by designing and deploying a high-interaction honeypot, *HoneyShip*, emulating a Very Small Aperture Terminal (VSAT) system to collect real-world attack data. The HoneyShip's design is guided by the insights we gathered from Shodan and verified by Nmap. We utilized Shodan to identify real-world vulnerable VSAT systems and then used Nmap to repeatedly scan them, revealing how long they remain online. We deployed HoneyShip for a month, resulting in logging thousands of unique IP addresses and interactions. Our analysis of the Shodan and HoneyShip data revealed predominantly automated attacks probing for known vulnerabilities, with previously unreported patterns identified. These findings demonstrate the effectiveness of honeypots in providing actionable threat intelligence, which can inform and strengthen maritime cybersecurity defenses.**

***Index Terms*—Honeypot, Honeynets, VSAT, Maritime Cyber Security**

## I. Introduction

The maritime industry is increasingly confronted with a wide range of cybersecurity threats. These threats come from malicious actors aiming to disrupt operations and targeted attacks seeking sensitive information. Although historically, the reporting rate for such incidents has been low, there has been a noticeable rise, which can have costly repercussions [1]–[3]. This rise might be attributed to factors such as the increasing average vessel age, currently at 22.2 years, and the growing global fleet, now totaling 105,493 vessels [4].

The cybersecurity preparedness of the GMTS is still behind relative to other industries. The maritime industry had a lack of focus in relation to maritime cybersecurity incidents. Since the NotPetya cyberattack, there has been a shift in the volume of research conducted on the topic of maritime cybersecurity.

Bothur et al. [5] identified vulnerabilities in various onboard systems, including the VSAT system, which was found to be vulnerable at both the protocol and implementation levels. The VSAT systems on ships are an essential component in providing internet connectivity to ships at sea. The system is a satellite-based communication system. Concerning the efforts to document the real cyberattacks that targeted GMTS, we could identify two works, namely the ADMIRAL [6] and MCAD databases [2]. While these databases provide detailed information, the number of recorded attacks appears low compared to other sectors. Additionally, critical details about the attackers' techniques and steps are missing. Therefore, in this work, we propose to use honeypots as an effective mechanism to collect the missing attacking data, which can lead to building more robust defense solutions. Although few studies [7] [8] have explored this method, our work stands out due to its advanced design and implementation stack.

In this work, we explore the design, implementation, and deployment of HoneyShip, a honeypot that emulates a VSAT portal. HoneyShip was deployed in a controlled environment for one month to simulate a real maritime VSAT system as if it were operating on a real vessel. The data collected from the honeypot was analyzed to gain insights into the nature of cyberattacks targeting these VSAT systems. This analysis provided valuable information on the types of attacks made, whether they were targeted, who the threat actors were, and the various exploits used.

## II. Technical Background

This section briefly overviews honeypots, containerization, and maritime systems and communications.

### A. Honeypots

A honeypot is a deceptive tool that mimics authentic operational systems to attract and engage adversaries [9]. This interaction enables the gathering of critical cyber intelligence, including cybercriminals' tactics, techniques, and procedures (TTPs). Honeypots are classified based on the level of interaction they provide. There are three main types, low-interaction, medium-interaction, and high-interaction [10]. Additionally, there are hybrid-interaction honeypots, which combine features of two or more of the main types [11].

**Low-Interaction Honeypots:** Low-interaction honeypots simulate only the most basic services and protocols to interact with potential attackers. Examples include Glutton [12], which can simulate SSH, Telnet, ADB, FTP, HTTP, XMPP, SMTP, and MQTT. Thug, aimed at mimicking the behavior of a web browser to detect and emulate malicious content [13]. Dionaea [14], which is the follow-up of Nepenthes [15]. It can simulate

Authorized licensed use limited to: Old Dominion University. Downloaded on March 23,2026 at 01:55:20 UTC from IEEE Xplore. Restrictions apply.

HTTP, FTP, MQTT, MySQL, and UPnP services and capture shellcodes and malware.

**Medium-Interaction Honeypots:** Medium-interactive honeypots can imitate well-known vulnerabilities by leveraging the operating system's network stack An example is cowrie [16], which emulates a shell terminal exposed via SSH and Telnet and logs all commands executed by attackers.

**High-Interaction Honeypots:** High-interaction honeypots provide a more realistic environment by emulating full operating systems and services, allowing for deeper interaction with attackers. For instance, Wetland [17], an SSH server honeypot that logs brute-force attacks. Additionally, Wetland records various brute-force attack activities, including shell commands, SCP, SFTP, exec-command, and direct and reverse-forward interactions.

### B. Containerization

Containerization is a virtualization technology that packages applications and their dependencies into a single unit called a container. Unlike traditional virtual machines, containers share the kernel of the host operating system, making them more resource efficient and faster to deploy. Containerization has become a popular choice for the deployment of honeypots due to its flexibility, scalability, and isolation capabilities.

Docker provides a solution for easily maintaining and deploying containers. A Docker container is a lightweight, standalone, executable package of software that includes everything needed to run that application: code, runtime, system tools, system libraries, and settings. In practice, a container corresponds to a lightweight virtual machine [18].

### C. Maritime Systems and Communications

The informational and operational network of a ship enables connected devices to communicate with local or remote systems. As depicted in Figure 1, the VSAT (Very Small Aperture Terminal) is a gateway between the ship itself and the outside world. It may provide digitally encoded communication, such as telephone and television, but most commonly internet access. Larger ships may have multiple VSAT dishes for different communication types or for redundancy.

The LAN (local area network) can be simple and unstructured or complex and layered, depending on the requirements of a ship. In the core are switches, routers, and modems. At the edge, devices can be connected via a wired connection or via Wi-Fi. Edge devices may include personal laptops or phones, owned by crew members or passengers, or are operational devices, such as navigation systems, engine monitoring, and CCTV.

## III. Related Work

Honeypots are well-established tools in cybersecurity; however, their application in the maritime industry is relatively unexplored. Although there are a few papers that discuss the use of honeypots in the maritime context, the field is still in its infancy.

One notable initiative is the TwinPot project [19], which focuses on seaport cybersecurity and is based on a digital twin model. The goal of the project is to develop a twin digital model of the Information Technology (IT) and Operational Technology (OT) systems of a seaport to gather information on cyber threats.

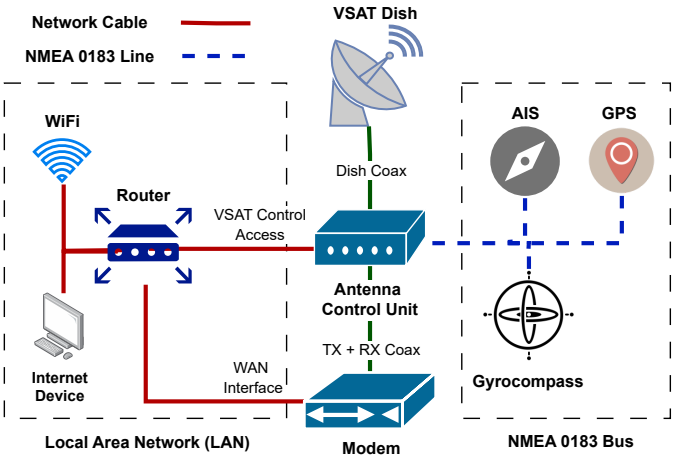


Fig. 1. A simplified overview of a ship's network, where the VSAT provides internet access to a LAN while being connected to an NMEA bus.

Another significant effort is the framework named MAINFRAME [20]. The framework is designed for intrusion detection inside a ship's network. The framework needs to be deployed on a ship, but is not designed to detect attacks.

Two papers that were used as reference are most similar to this work [7] [8]. These discuss the design of maritime honeynets to collect and analyze threats targeting the maritime industry. One of the papers focuses on the design of a maritime VSAT honeynet to collect cyberattacks and analyze threats [8]. Although this honeynet has not yet been fully implemented, the work offers valuable insights into designing such a system. Their suggestions provide a foundation for further development in this area, and several aspects of their proposal are particularly relevant to our work. For example: (I) The associated IP addresses should be in the same range as the real-world maritime systems. (II) Data such as AIS information should be a realistic shipping route. (III) The bandwidth and roundtrip time should be the same as satellite internet. (IV) The systems should appear to be active and updated with real-time information.

## IV. Methodology

In this section, the methodology used is outlined. Figure 2 illustrates the workflow of the study, which began with a case study on VSAT systems. The study started with an online exploration of vulnerabilities associated with VSAT systems, as shown in Step 1. In this step, publicly available resources such as the Common Vulnerabilities and Exposures (CVE) database [21] were used to understand and identify the vulnerabilities that exist in VSAT systems.

Step 2 in Figure 2 was about identifying exposed VSAT systems on the internet. Targeted queries, such as title:"VSAT" or title:"Sailor", were used in Shodan to identify VSAT

Authorized licensed use limited to: Old Dominion University. Downloaded on March 23,2026 at 01:55:20 UTC from IEEE Xplore. Restrictions apply.

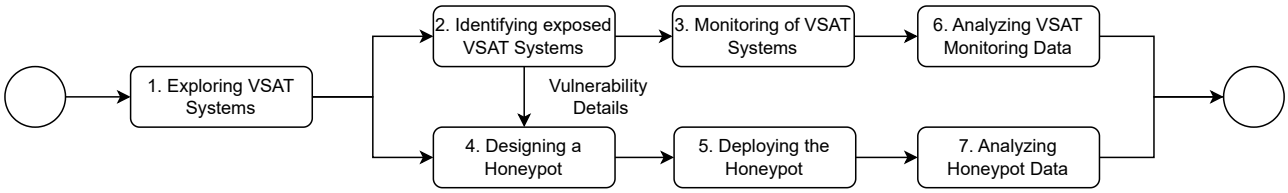


Fig. 2. Workflow of the presented study. The study started with exploring VSAT systems. Next, the study continued with identifying, monitoring, and analyzing VSAT systems. In parallel, the honeypot was designed, deployed, and analyzed. The identified vulnerabilities in VSAT systems were used as input in the honeypot design.

systems exposed to the internet. In this step, data such as the types of systems online and their geographical positions were gathered.

The identified VSAT systems from step 2 were actively monitored in step 3 for over a month to gather more detailed information. In this step, automated scripts were developed and deployed to query Shodan and use Nmap for scanning. This enabled tracking of changes in system exposure, software version, and vulnerabilities.

In parallel to identifying exposed VSAT systems in step 2, the designing and development of the honeypot started at step 4. Based on the vulnerabilities identified, a high-interaction honeypot named HoneyShip was designed and developed to emulate a Cobham SeaTel VSAT system. The goal of the honeypot was to attract attackers and log their activity.

In step 5 of Figure 2 HoneyShip was deployed in a controlled environment for a time period of a month. HoneyShip is exposed to the internet with the vulnerabilities built into it.

After running the scripts that monitored the VSAT system and the deployment of HoneyShip for a month, the analysis could take place, which are part 6 and 7 respectively.

## V. Implementation

This section outlines the key objectives of the methodology: automating Shodan monitoring and Nmap scans for VSAT system data collection, as well as designing the HoneyShip honeypot to emulate a real-world VSAT system for analyzing adversarial behavior.

### A. Shodan monitoring

A script was developed to automate the Shodan [22] and Nmap [23] scanning process for identifying and monitoring VSAT systems. Using Shodan's API, relevant queries identify systems and return data such as open ports, communication protocols, and vulnerabilities. However, Shodan's scans are not performed daily, so the script supplements this by using Nmap to re-scan all the collected IP addresses and retrieve the systems' current state. The script also collects the full HTTP response from the target, which includes the software version and product name of the system on the landing page.

### B. Honeypot design and implementation

This section describes the implementation of HoneyShip, a high-interaction honeypot designed to emulate a ship's VSAT system. The honeypot is based on a well-known, open-source

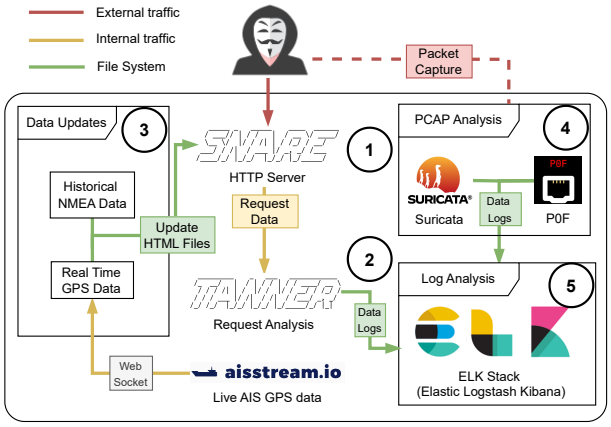


Fig. 3. The Architecture of the HoneyShip honeypot, showing the components to provide the VSAT interface (1), the updating of the honeypot interface (3), capturing and analyzing network traffic (2 and 4), and the ELK stack for real-time monitoring and analysis (5).

honeypot platform called T-pot [24], which includes honeypot services such as SSH, Telnet, HTTP, and FTP, as well as network monitoring tools like Suricata [25] and P0f [26]. HoneyShip emulates the Cobham Sea Tel VSAT system, software version 141 (Build:225444), which is widely used in the maritime industry and is known to have vulnerabilities. It is the same system used in the honeynet by Pijpker and McCombie [8] as discussed in section III.

The HoneyShip architecture is displayed in Figure 3. An attacker (1) can interact with the HoneyShip honeypot through the HTTP server, which is the main entry point. The Snare HTTP server sends request data to Tanner [27] (2), which evaluates and classifies HTTP requests. While an adversary is interacting with the honeypot, the real-time data (3) is updating the ship's position, speed, and heading on the VSAT dashboard. The PCAP analysis tools (4) captures network traffic and analyses it for any malicious activity. The log files that have been generated, are ingested by the ELK stack (5), which provides data aggregation, analysis, and visualization.

The honeypot is divided into several components, each with a specific purpose. These components are the HTTP server, real-time data provider, PCAP analysis tools, and log analysis tools. The following parts discuss how they work, and correspond with the numbers in Figure 3.

Authorized licensed use limited to: Old Dominion University. Downloaded on March 23,2026 at 01:55:20 UTC from IEEE Xplore. Restrictions apply.

*1) HTTP Server:* To emulate the VSAT dashboard, a simple Python-based honeypot HTTP server, Snare [28], was chosen for its customizability. Using Snare's site clone feature, the VSAT dashboard was mirrored by downloading necessary files (HTML, CSS, JavaScript), though some files required manual retrieval.

The mirror does not replicate backend interactions, so HTTP responses were captured manually from a real VSAT system. Static responses were hard-coded into Snare, while dynamic responses simulating live ship data were implemented separately.

Snare was modified to match Sea Tel VSAT server behavior, including accurate HTTP response types and caching. Latency between 400 ms and 1 second was introduced to simulate satellite internet. File upload handling was added for HTTP endpoints relating to the firmware and configuration pages to capture uploaded files. The server runs on port 80, the default for HTTP and most commonly used by Sea Tel systems.

*2) Request Analysis:* Tanner [27] is used to analyze requests made to the Snare honeypot. Designed to work with Snare, Tanner evaluates and classifies HTTP requests while logging detailed data, including methods, URLs, headers, and bodies, to JSON files. These logs are later processed by Logstash in the ELK stack for analysis. Tanner's HTTP vulnerability emulation feature is disabled, as it is not relevant to this honeypot.

*3) Real-time data:* The VSAT dashboard displays real-time data, such as a ship's position, speed, and heading, sourced from an NMEA data bus. To emulate this, a Python program in a Docker container updates the dashboard by modifying HTML files directly.

Historical data from a publicly available NMEA 0183 log of the cargo ship Calvi was used alongside real-time data. The log contains timestamped sentences with the ship's position, speed, and heading, read and transmitted by VDRplayer [29] over a TCP socket. Another Python program updates Snare's HTTP responses based on this data, serving endpoints like /cgi-bin/getHeadBarStatus that the dashboard polls every 5 seconds.

To enhance realism, real-time AIS data is integrated using the aisstream.io API [30], replacing historical data when available. By default, AIS data is fetched for the Calvi (mmsi: 226001760) using its MMSI number.

*4) PCAP Analysis:* The honeypot uses Suricata and P0f to analyze network traffic. Suricata is a high-performance IDS/IPS and monitoring engine, offering features like CVE fingerprinting, IP reputation, and protocol detection. P0f is a passive OS fingerprinting tool that identifies remote host operating systems from captured packets, useful for detecting scanning devices. Both tools generate log files for post-collection analysis.

*5) Log Analysis:* The honeypot logs are analyzed using the ELK stack (Elasticsearch [31], Logstash, and Kibana), a popular open-source tool for log visualization and analysis. Since T-pot includes the ELK stack, only minor configuration adjustments were needed.

TABLE I
TOTAL OF IDENTIFIED CVES [21] OF THE EXPOSED 🟠 COBHAM SAILOR AND 🔵 SEA TEL SYSTEMS SORTED BY DATE

| | | CVE | Severity | Method | Occur. | Target |
|---|---|---|---|---|---|---|
| 🟠 | | CVE-2022-22707 | 4.3 | Shodan | 6/7 | lighttpd |
| 🟠 | 🔵 | CVE-2020-11023 | 4.0 | Shodan | 11/11 | jQuery |
| 🟠 | 🔵 | CVE-2020-11022 | 4.3 | Shodan | 11/11 | jQuery |
| | 🔵 | CVE-2019-16320 | 5.3 | Manual | 4/4 | Sea Tel |
| 🟠 | 🔵 | CVE-2019-11358 | 4.3 | Shodan | 11/11 | jQuery |
| 🟠 | | CVE-2019-11072 | 7.5 | Shodan | 7/7 | lighttpd |
| | 🔵 | CVE-2018-5728 | 5.3 | Manual | 3/4 | Sea Tel |
| | 🔵 | CVE-2018-5267 | 9.8 | Manual | 3/4 | Sea Tel |
| | 🔵 | CVE-2018-5266 | 7.5 | Manual | 3/4 | Sea Tel |
| | 🔵 | CVE-2018-5071 | 5.4 | Manual | 3/4 | Sea Tel |
| 🟠 | | CVE-2018-19052 | 5.0 | Shodan | 7/7 | lighttpd |
| 🟠 | | CVE-2018-19394 | 3.5 | Manual | 7/7 | Cobham Sailor |
| 🟠 | | CVE-2018-19393 | 7.8 | Manual | 7/7 | Cobham Sailor |
| 🟠 | 🔵 | CVE-2015-9251 | 4.3 | Shodan | 11/11 | jQuery |
| 🟠 | | CVE-2014-2940 | 10.0 | Manual | 7/7 | Cobham Sailor |
| 🟠 | | CVE-2013-7180 | 7.8 | Manual | 7/7 | Cobham Sailor |

## VI. RESULTS

After deploying the honeypot for one month and monitoring Shodan for two months, the data collection period was finished. This section shows some of the most important insights of that data.

### A. Shodan Data Collection and Analysis

Table I shows 11 Cobham Sailor and 9 Cobham Sea Tel vulnerabilities that have been identified, some using Shodan and some manually by identifying CVEs specific to the current software version. It also lists how many of the systems were found to be vulnerable to the CVEs, the severity of the vulnerabilities, and the software component that is vulnerable.

Sailor vulnerabilities include CVE-2018-19393, a cross-site scripting flaw requiring admin access to inject malicious code, and CVE-2018-19394, which allows arbitrary content to be written to the configuration file, potentially causing denial of service. CVE-2014-2940 is a hard-coded credentials issue that provides a permanent backdoor with default admin credentials. CVE-2013-7180 enables privilege escalation to admin through physical or terminal access.

Sea Tel vulnerabilities like CVE-2019-16320 and CVE-2018-5728 expose sensitive information like vessel location. The highest rated, CVE-2018-5267, bypasses authentication via specific URLs. CVE-2018-5266 stores credentials in an accessible JavaScript file, and CVE-2018-5071 allows JavaScript injection through TELNET shell commands.

The Sailor and Sea Tel web interfaces use outdated jQuery versions, that have known vulnerabilities. Sailor jQuery 1.12.4, while Sea Tel uses 1.10.2, both of which are affected by multiple issues, including CVE-2020-11023 and CVE-2020-11022 (code injection), CVE-2019-11358 (Object.prototype pollution), and CVE-2015-9251 (cross-site scripting). These vulnerabilities allow attackers to inject HTML or JavaScript, potentially causing denial of service or other malicious actions.

Authorized licensed use limited to: Old Dominion University. Downloaded on March 23,2026 at 01:55:20 UTC from IEEE Xplore. Restrictions apply.

TABLE II
EXPOSED ● COBHAM SAILOR AND ● SEA TEL SYSTEMS THAT HAVE BEEN FOUND AND MONITORED

| Port | Version | Product | CVEs | Uptime | Provider |
|---|---|---|---|---|---|
| 80 | 1.64-19 | SAILOR 900 VSAT Ku | 11/11 | 48 days | Telenor Satellite AS |
| 80 | 1.08-370 | SAILOR 4300 L-Band | 9/11 | 61 days | MARLINK |
| 80 | 1.64-19 | SAILOR 900 VSAT High Power | 11/11 | 3 days | Isotropic Networks |
| 80 | 1.64-19 | SAILOR 900 VSAT High Power | 11/11 | 3 days | Isotropic Networks |
| 8088 | 1.64-6 | SAILOR 600 VSAT Ku | 10/11 | 26 days | IsoTropic Networks, Inc. |
| 8080 | 1.64-16 | SAILOR 900 VSAT Ku | 11/11 | 13 days | SpaceX Services, Inc. |
| 8080 | 1.64-16 | SAILOR 900 VSAT Ku | 11/11 | 3 days | PT. NAP Info Lintas Nusa |
| 8080 | 1.64-16 | SAILOR 900 VSAT Ku | 11/11 | 29 days | SpaceX Services, Inc. |
| 8080 | 1.64-16 | SAILOR 900 VSAT Ku | 11/11 | 13 days | SpaceX Services, Inc. |
| 80 | 335-226244 | n/a | 9/9 | > 2 Months | Ellijay Telephone Company |
| 8080 | 194-225444 | n/a | 9/9 | 17 days | SpaceX Services, Inc. |
| 8080 | 335-226244 | n/a | 9/9 | > 2 Months | Asia Satellite Telecommunications Co. Ltd. |
| 80 | 335-226244 | n/a | 9/9 | 17 days | SpaceX Services, Inc. |

The Sailor systems use the *lighttpd* web server, with six using version 1.4.48 (released in 2017) and one using version 1.4.41 (from 2016). Both are affected by CVE-2022-22707 (stack-based buffer overflow) and CVE-2019-11072 (signed integer overflow), which both enable denial of service. Version 1.4.41 is vulnerable to CVE-2018-19052, allowing directory traversal attacks. The Sea Tel systems most likely use a proprietary "Micro Digital Web Server," whose vulnerabilities are not documented.

Table II lists all the Cobham Sailor and Sea Tel systems discovered through Shodan and monitored using NMAP. The version and build number of the current software, along with the product name, are reported by the webserver, providing insight into potential CVE vulnerabilities. These CVEs are counted along with those identified by Shodan. The uptime is calculated based on the number of days the system was exposed, starting from the discovery date on Shodan and ending when the system could no longer be reached using Nmap. The final column indicates the internet service provider, determined by the autonomous system number associated with the registered IP address.

### B. Honeypot Data Collection and Analysis

The HoneyShip honeypot has collected data for a period of one month, and this section presents some of the data that has been collected and analyzed. This subsection is divided into three parts, the first is about the general results of the honeypot, the second is a look into the adversaries that interacted with the honeypot, and the last part covers the exploits associated with the Sea tel system.

TABLE III
THE AMOUNT OF TRAFFIC AND UNIQUE IP ADDRESSES FOR DIFFERENT PROTOCOLS

| Type | Interactions | Unique IPs |
|---|---|---|
| All traffic | 39 195 | 2 612 |
| TCP | 37 046 | 2 580 |
| HTTP | 9 972 | 1 483 |
| ICMP | 1 907 | 5 |
| UDP | 242 | 55 |

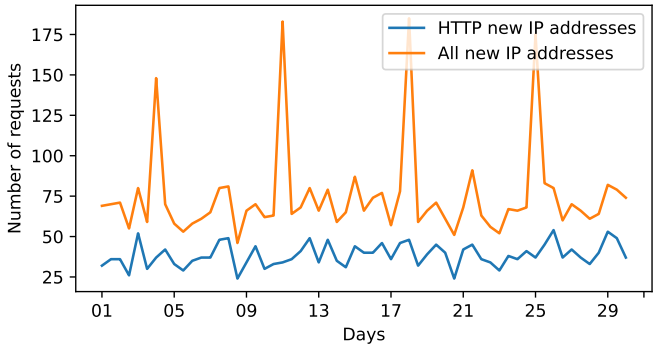


Fig. 4. The amount of previously unseen IP addresses of requests to the honeypot every 12 hours over one month

*1) General Honeypot results:* This following results give insight into the general results on the data that was collected.

Table III shows the total amount of interactions and unique IP addresses. The HTTP traffic is a subset of the TCP traffic, and combine with the UDP and ICMP traffic to get the full amount. One interaction a full TCP or UDP session to the honeypot, and one unique IP address is an IP address that has not been seen before.

Figure 4 shows the trend of the number of unique, previously unseen IP addresses collected every 12 hours, displaying both total traffic and HTTP-specific traffic over time.

Table IV presents the top clients responsible for the highest number of HTTP requests sent to the honeypot. The "time range" indicates the duration between the first and last request made by each client. The "IP abuse score" reflects the likelihood of malicious behavior, as determined by databases like IPQS [32], which catalog IP addresses reported for malicious activity. Additionally, the "user agent" refers to the software identified in the HTTP requests sent by the client. Notably, clients can manipulate this identifier, resulting in some IP addresses being associated with multiple user-agent variants.

Table V categorizes requests based on their IP addresses and behaviors, as classified by Suricata. The most frequent classification is "known attacker" which refers to blacklisted IP addresses identified as malicious. The second most common category is "mass scanner" encompassing IP addresses actively scanning the internet for various purposes. The "bot

Authorized licensed use limited to: Old Dominion University. Downloaded on March 23,2026 at 01:55:20 UTC from IEEE Xplore. Restrictions apply.

TABLE IV
THE TOP 10 MOST ACTIVE CLIENTS IDENTIFIED BY IP ADDRESS, ORDERED BY THE AMOUNT OF HTTP REQUESTS

| Req. | Time Range | IP Abuse | Country | User Agent(s) |
|---|---|---|---|---|
| 358 | 30 min | 65% | Sweden | 158 Variants |
| 357 | 1 hr, 1 min | 65% | Australia | 164 Variants |
| 357 | 50 min | 65% | India | 151 Variants |
| 357 | 38 min | 65% | Canada | 152 Variants |
| 357 | 29 min | 93% | United States | 162 Variants |
| 345 | 28 days, 23 hr | 100% | Netherlands | Edge on Windows 10 |
| 165 | 30 days, 16 hr | 93% | Netherlands | Edge 90 on Windows 10 |
| 127 | 1 hr, 47 min | 100% | Netherlands | Chrome 122 on Windows 10 |
| 127 | 1 hr, 55 min | 88% | India | Chrome 122 on Windows 10 |
| 127 | 2 hr, 25 min | 99% | Singapore | Chrome 122 on Windows 10 |

TABLE V
CLASSIFIED IP ADDRESS BY SURICATA ORDERED BY THE AMOUNT OF REQUESTS OF ALL TRAFFIC

| Type | Requests |
|---|---|
| Known Attacker | 3 589 |
| Mass Scanner | 292 |
| Bot or Crawler | 187 |
| Form Spammer | 14 |

or crawler" classification includes IP addresses associated with automated bots or web crawlers, while the "form spammer" category identifies IP addresses engaged in spamming website forms.

*2) Adversary Analysis:* The following part will look into types of the adversaries the honeypot has faced. Specifically, if adversaries are human driven or bots, and the depth that was reached on the honeypot. An analysis was done to find evidence of a targeted attack on the Sea Tel honeypot.

Table VI outlines traffic sets, with each row representing a collection of requests from client IP addresses. Initially, the total traffic received by the honeypot is considered, retaining only HTTP requests.

Next, IP addresses that did not request the "/" page are excluded, as visiting this root page often indicates human-driven interaction. This step identifies 1151 IP addresses.

From these, IP addresses that did not request the "/Login.html" page are removed. This page is typically accessed after redirection when executing the "common.js" script, leaving 135 IP addresses.

TABLE VI
REQUESTS FILTERED BY CRITERIA, WHERE EACH SUBSEQUENT ROW IS A SUBSET OF THE PREVIOUS

| | Unique IP Addresses | Requests |
|---|---|---|
| All Traffic | 2 612 | 39 195 |
| HTTP Traffic | 1 547 | 9 726 |
| To "/" page | 1 151 | 6 832 |
| To "/Login.html" page | 135 | 2 350 |
| To "/Menu**.html" page | 4 | 1 091 |

TABLE VII
THE REMAINING 4 IP ADDRESSES OF THE PREVIOUS TABLE THAT REQUESTED ONE OF THE "/MENU**.HTML" PAGES

| Requests | Time Range | IP Reputation | Country | User Agents |
|---|---|---|---|---|
| 358 | 30 minutes | 65% | Sweden | 158 Variants |
| 357 | 61 minutes | 65% | Australia | 164 Variants |
| 357 | 52 minutes | 65% | India | 151 Variants |
| 19 | 18 minutes | 65% | Australia | 15 Variants |

TABLE VIII
THE AMOUNT OF HTTP REQUESTS TO URLS THAT ARE ASSOCIATED TO THE SEA TEL CVES [21]

| CVE | Related Path | Unique | Total |
|---|---|---|---|
| CVE-2018-5728 | /cgi-bin/getSysStatus | 3 | 3 |
| CVE-2018-5267 | Menu**.html | 5 | 38 |
| CVE-2018-5266 | js/userLogin.js | 91 | 114 |

Finally, we filter out IP addresses that did not request any "/Menu**.html" pages. These pages are accessed post-login and indicate successful authentication. Only four IP addresses satisfy this condition.

The 4 IP addresses that accessed the "/Menu**.html" pages, as shown in Table VII, generated a total of 1091 requests. Originating from Sweden, Australia, and India, these IPs have a 65% reputation score according to IPQS [32] but are not on any blacklist yet. Their activity spans 18 minutes to 1 hour and 1 minute, claiming up to 164 different user-agent variants. The first three IPs match those listed in Table IV.

*3) Sea Tel exploits:* This last part of the results presents the analysis on the honeypot data that is related to Sea Tel VSAT CVEs, as shown in table I.

This analysis focuses solely on exploits specific to the Sea Tel VSAT system, excluding other exploits found in the data. CVE-2018-5071 and CVE-2019-16320 are not analyzed, as they pertain to Telnet and SNMP services outside the scope of the HoneyShip honeypot.

Table VIII details potential exploitation of CVEs. The "Related Path" column indicates the accessed path, "Unique" represents the number of unique IP addresses targeting the path, and "Total" shows the overall request count for the path. The "**" in "Menu**.html" is a wildcard for any menu, such as "MenuDealer.html" and "MenuUser.html", which are all part of the same CVE. Requests to these files are a sign of possible exploitation.

## VII. DISCUSSION

The critical vulnerabilities gathered through the HoneyShip were primarily triggered by automated adversarial activity. Unlike previous studies such as TwinPot and MAINFRAME, this work recommends designing customized honeypots, which are tailored to specific systems such as Cobham Sea Tel. In addition, previous research assumed that attacks on maritime systems were deliberate and targeted, focusing on exploiting specific weaknesses. However, our study did not find any evidence of such targeted attacks. On the contrary, the identified attacks were found to exploit widely known vulnerabilities.

Authorized licensed use limited to: Old Dominion University. Downloaded on March 23,2026 at 01:55:20 UTC from IEEE Xplore. Restrictions apply.

Despite its contributions, our work has some limitations. First, the one-month collection period may be insufficient for capturing long-term trends. Second, the study focused mainly on web-based vulnerabilities, excluding other services. For future research, we recommend extending the deployment duration and expanding the scope to include a wider range of vulnerabilities. Third, HoneyShip was deployed on a machine with a non-satellite-based internet provider. Since satellite internet is commonly found on ships, we believe future studies could benefit from using internet providers like Starlink to reduce the risk of detectability.

## VIII. Conclusion

In this study, we investigated the effectiveness of using honeypots to get insight into cyber threats targeting the GMTS. In doing so, we designed and deployed HoneyShip, a honeypot that emulates VSAT systems. The HoneyShip incorporated carefully selected vulnerabilities that manifest in real-life VSAT systems, confirmed by Shodan and Nmap scans. During a month of deployment, HoneyShip recorded 39,195 interactions from 2,612 unique IP addresses. Most of these attacks were automated, targeting outdated software and exploiting known vulnerabilities. In addition, Shodan and Nmap data revealed 13 unique VSAT systems vulnerable to 16 unique CVE vulnerabilities. The uptime for these systems ranged from three days to more than two months, giving attackers a wide attack window.

These findings show the widespread exposure of maritime VSAT systems in particular and the GMTS in general. Furthermore, this work demonstrates the effectiveness of using honeypots to collect threat intelligence, which can inform more effective defense mechanisms. Future work will focus on expanding the scope of deployment and integrating honeypots into real-time maritime cybersecurity systems.

## References


[1] P. H. Meland, K. Bernsmed, E. Wille, Ø. J. Rødseth, and D. A. Nesheim, "A retrospective analysis of maritime cyber security incidents," *TransNav Int. J. Mar. Navig. Saf. Sea Transp.*, vol. 15, no. 3, pp. 519–530, 2021.

[2] NHL Stenden University of Applied Sciences, "Maritime cyber attack database (mcad)." https://maritimecybersecurity.nl, n.d. Accessed: 2024-12-11.

[3] F. Akpan, G. Bendiab, S. Shiaeles, S. Karamperidis, and M. Michaloliakos, "Cybersecurity challenges in the maritime sector," *Network*, vol. 2, no. 1, pp. 123–138, 2022.

[4] S. N. Sirimanne, "Review of maritime transport," *United Nations*, 2024. Accessed: 2025-01-10.

[5] D. Bothur, G. Zheng, and C. Valli, "A critical analysis of security vulnerabilities and countermeasures in a smart ship system," in *Australian Information Security Management Conference*, Edith Cowan University, 2017.

[6] O. Jacq, *Détection, analyse contextuelle et visualisation de cyber-attaques en temps réel : élaboration de la Cyber Situational Awareness du monde maritime*. PhD thesis, École nationale supérieure Mines-Télécom Atlantique Bretagne Pays de la Loire, 2021. Thèse de doctorat dirigée par Yvon Kermarrec, Informatique.

[7] S. J. McCombie and J. Pijpker, "A ship honeynet project to collect data on cyber threats to the maritime sector," in *Proceedings of the Seventh International Conference on Cyber-Technologies and Cyber-Systems (CYBER 2022)*, 2022.

[8] J. Pijpker and S. J. McCombie, "A ship honeynet to gather cyber threat intelligence for the maritime sector," in *2023 IEEE 48th Conference on Local Computer Networks (LCN)*, pp. 1–6, 10 2023.

[9] J. Franco, A. Aris, B. Canberk, and A. S. Uluagac, "A survey of honeypots and honeynets for internet of things, industrial internet of things, and cyber-physical systems," *IEEE Communications Surveys & Tutorials*, vol. 23, no. 4, pp. 2351–2383, 2021.

[10] I. Mokube and M. Adams, "Honeypots: concepts, approaches, and challenges," in *Proceedings of the 45th Annual Southeast Regional Conference*, ACM-SE 45, (New York, NY, USA), p. 321–326, Association for Computing Machinery, 2007.

[11] N. Ilg, P. Duplys, D. Sisejkovic, and M. Menth, "A survey of contemporary open-source honeypots, frameworks, and tools," *Journal of Network and Computer Applications*, vol. 220, p. 103737, 2023.

[12] MushMush, "Glutton - generic low interaction honeypot." "https://github.com/mushorg/glutton". Accessed: 2025-01-10.

[13] A. Dell'Aera, "Thug - a honeyclient aimed at mimicking the behavior of a web browser." "https://github.com/buffer/thug". Accessed: 2025-01-10.

[14] "Dionaea is meant to be a nepenthes successor, embedding python as scripting language, using libemu to detect shellcodes, supporting ipv6 and tls.." "https://github.com/DinoTools/dionaea". Accessed: 2025-01-13.

[15] G. W. Paul Baecher, Markus Koetter, "Nepenthes - collect information about potential attacks using known vulnerabilities." "https://github.com/honeypotarchive/nepenthes". Accessed: 2025-01-10.

[16] M. Oosterhof, "Cowrie ssh and telnet honeypot." "https://github.com/cowrie/cowrie". Accessed: 2025-01-10.

[17] "Wetland - a high interaction ssh honeypot." "https://github.com/ohmyadd/wetland". Accessed: 2025-01-13.

[18] S. Bistarelli, E. Bosimini, and F. Santini, "A report on the security of home connections with iot and docker honeypots," in *ITASEC*, pp. 60–70, 2020.

[19] Y. Yigit, O. K. Kinaci, T. Q. Duong, and B. Canberk, "Twinpot: Digital twin-assisted honeypot for cyber-secure smart seaports," in *2023 IEEE International Conference on Communications Workshops (ICC Workshops)*, pp. 740–745, 05 2023.

[20] N. Pitropakis, M. Logothetis, G. Andrienko, J. Stefanatos, E. Karapistoli, and C. Lambrinoudakis, "Towards the creation of a threat intelligence framework for maritime infrastructures," in *Lecture Notes in Computer Science (LNCS), including subseries Lecture Notes in Artificial Intelligence and Lecture Notes in Bioinformatics*, vol. 11980, pp. 53–68, Springer, 2020.

[21] National Institute of Standards and Technology, "National vulnerability database (nvd)." https://nvd.nist.gov, n.d. Accessed: 2024-12-11.

[22] J. Matherly, "Shodan: The world's first search engine for internet-connected devices." https://www.shodan.io, 2009. Accessed: 2025-01-09.

[23] G. Lyon, "Nmap: Network mapper." https://nmap.org, 1997. Accessed: 2025-01-09.

[24] M. Ochse, "T-pot - the all in one multi honeypot platform." "https://github.com/telekom-security/tpotce". Accessed: 2025-01-10.

[25] "Suricata - open source ids / ips / nsm engine." https://suricata.io, 2025. Accessed: 2025-01-13.

[26] M. Zalewski, "p0f - passive os fingerprinting tool." https://lcamtuf.coredump.cx/p0f3/, 2025. Accessed: 2025-01-13.

[27] MushMush, "Tanner - he who flays the hide." "https://github.com/mushorg/tanner". Accessed: 2025-01-10.

[28] MushMush, "Snare - super next generation advanced reactive honeypot." "https://github.com/mushorg/snare". Accessed: 2025-01-10.

[29] "Vdrplayer - play voyage data recorder files over ip link." https://github.com/transmitterdan/VDRplayer. Accessed: 2025-01-13.

[30] aisstream.io, "Track the worlds vessels via websocket." https://aisstream.io//. Accessed: 2025-01-13.

[31] F. Mohsen, H. Abdelhaq, H. Bisgin, A. Jolly, and M. Szczepanski, "Countering intrusiveness using new security-centric ranking algorithm built on top of elasticsearch," in *2018 17th IEEE International Conference On Trust, Security And Privacy In Computing And Communications/ 12th IEEE International Conference On Big Data Science And Engineering (TrustCom/BigDataSE)*, pp. 1048–1057, 2018.

[32] "Ip reputation check - ip address reputation lookup & api." "https://www.ipqualityscore.com/ip-reputation-check". Accessed: 2025-01-13.


Authorized licensed use limited to: Old Dominion University. Downloaded on March 23,2026 at 01:55:20 UTC from IEEE Xplore. Restrictions apply.