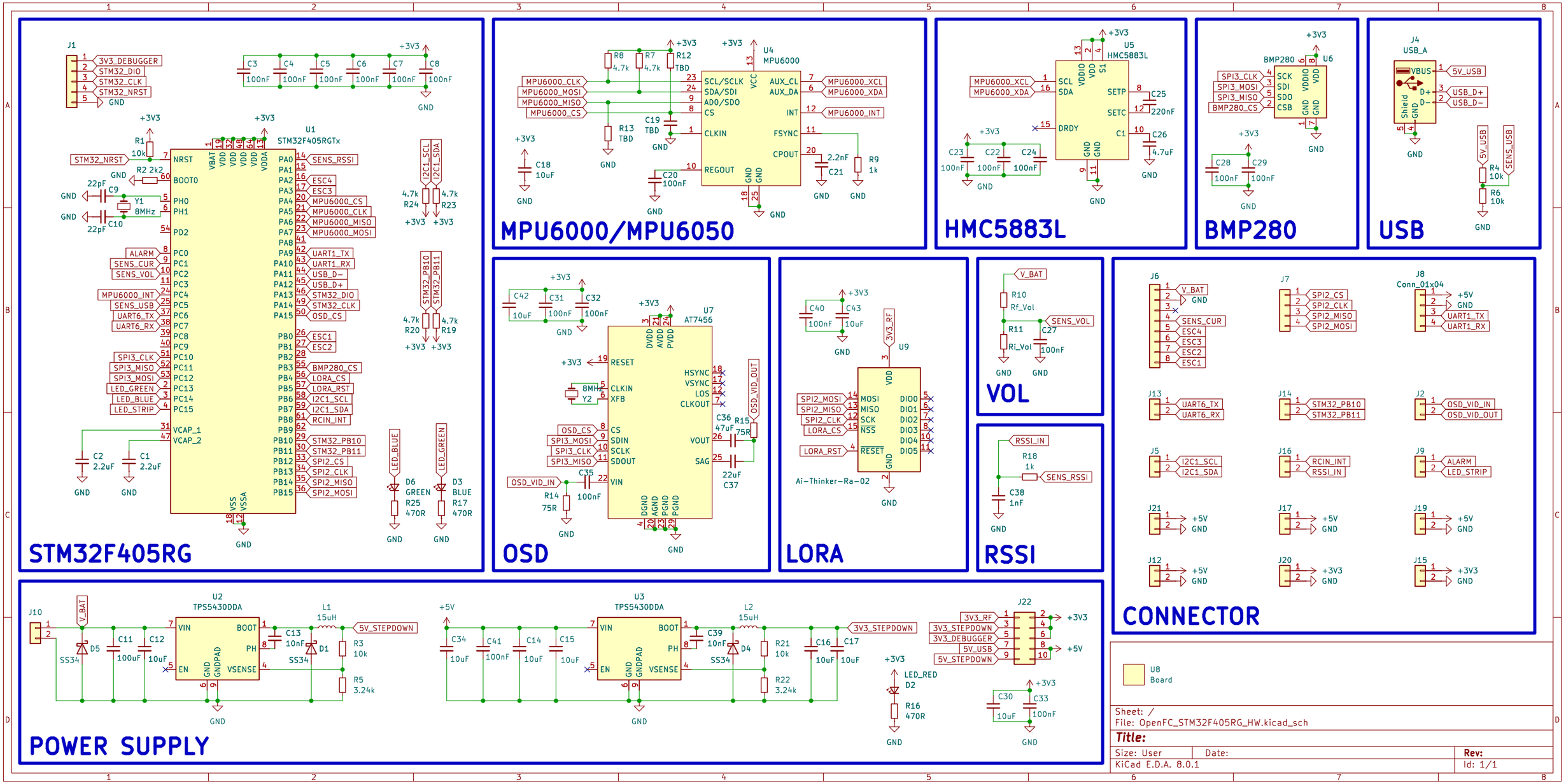
STM32F405RG
U1
STM32F405RGTx
J1
3V3_DEBUGGER
STM32_DIO
STM32_CLK
STM32_NRST
GND
+3V3
C3 100nF
C4 100nF
C5 100nF
C6 100nF
C7 100nF
C8 100nF
R1 10k
R2 2k2
Y1 8MHz
C9 22pF
C10 22pF
NRST
BOOT0
PH0
PH1
PD2
VBAT
VDD
VDDA
VCAP_1
VCAP_2
VSS
VSSA
ALARM
SENS_CUR
SENS_VOL
MPU6000_INT
SENS_USB
UART6_TX
UART6_RX
SPI3_CLK
SPI3_MISO
SPI3_MOSI
LED_GREEN
LED_BLUE
LED_STRIP
SENS_RSSI
ESC4
ESC3
MPU6000_CS
MPU6000_CLK
MPU6000_MISO
MPU6000_MOSI
UART1_TX
UART1_RX
USB_D−
USB_D+
STM32_DIO
STM32_CLK
OSD_CS
ESC1
ESC2
BMP280_CS
LORA_CS
LORA_RST
I2C1_SCL
I2C1_SDA
RCIN_INT
STM32_PB10
STM32_PB11
SPI2_CS
SPI2_MISO
SPI2_MOSI
C2 2.2uF
C1 2.2uF
I2C1_SCL
I2C1_SDA
R24 4.7k
R23 4.7k
STM32_PB10
STM32_PB11
R20 4.7k
R19 4.7k
LED_BLUE
LED_GREEN
D6 GREEN
R25 470R
D3 BLUE
R17 470R
MPU6000/MPU6050
U4
MPU6000
R8 4.7k
R7 4.7k
R12 TBD
R13 TBD
C19 TBD
C20 100nF
C18 10uF
SCL/SCLK
SDA/SDI
AD0/SDO
CS
CLKIN
REGOUT
VCC
AUX_CL
AUX_DA
INT
FSYNC
CPOUT
MPU6000_CLK
MPU6000_MOSI
MPU6000_MISO
MPU6000_CS
MPU6000_XCL
MPU6000_XDA
MPU6000_INT
C21 2.2nF
R9 1k
HMC5883L
U5
HMC5883L
SCL
SDA
VDDIO
VDD
S1
SETP
SETC
DRDY
C1
C23 100nF
C22 100nF
C24 100nF
C25 220nF
C26 4.7uF
BMP280
U6
BMP280
SCK
SDI
SDO
CSB
VDDIO
VDD
GND
SPI3_CLK
SPI3_MOSI
SPI3_MISO
BMP280_CS
C28 100nF
C29 100nF
USB
J4
USB_A
VBUS
D+
D−
Shield
GND
5V_USB
USB_D+
USB_D−
R4 10k
R6 10k
OSD
U7
AT7456
DVDD
AVDD
PVDD
RESET
CLKIN
XFB
CS
SDIN
SCLK
SDOUT
VIN
HSYNC
VSYNC
LOS
CLKOUT
VOUT
SAG
DGND
AGND
PGND
C42 10uF
C31 100nF
C32 100nF
8MHz Y2
OSD_CS
SPI3_MOSI
SPI3_CLK
SPI3_MISO
OSD_VID_IN
R14 75R
C35 100nF
C36 47uF
R15 75R
C37 22uF
OSD_VID_OUT
LORA
U9
Ai-Thinker-Ra-02
MOSI
MISO
SCK
NSS
RESET
VDD
GND
DIO0
DIO1
DIO2
DIO3
DIO4
DIO5
SPI2_MOSI
SPI2_MISO
SPI2_CLK
LORA_CS
LORA_RST
3V3_RF
C40 100nF
C43 10uF
VOL
V_BAT
R10 Rf_Vol
R11 Ri_Vol
C27 100nF
SENS_VOL
RSSI
RSSI_IN
R18 1k
C38 1nF
SENS_RSSI
CONNECTOR
J6
V_BAT
GND
SENS_CUR
ESC4
ESC3
ESC2
ESC1
J7
SPI2_CS
SPI2_CLK
SPI2_MISO
SPI2_MOSI
J8
Conn_01x04
+5V
GND
UART1_TX
UART1_RX
J13
UART6_TX
UART6_RX
J14
STM32_PB10
STM32_PB11
J2
OSD_VID_IN
OSD_VID_OUT
J5
I2C1_SCL
I2C1_SDA
J16
RCIN_INT
RSSI_IN
J9
ALARM
LED_STRIP
J21
J17
J19
J12
J20
J15
+3V3
POWER SUPPLY
J10
V_BAT
D5 SS34
C11 100uF
C12 10uF
U2
TPS5430DDA
VIN
BOOT
PH
EN
GND
GNDPAD
VSENSE
L1 15uH
C13 10nF
D1 SS34
5V_STEPDOWN
R3 10k
R5 3.24k
U3
TPS5430DDA
C34 10uF
C41 100nF
C14 10uF
C15 10uF
L2 15uH
C39 10nF
D4 SS34
R21 10k
R22 3.24k
C16 10uF
C17 10uF
3V3_STEPDOWN
J22
3V3_RF
3V3_STEPDOWN
3V3_DEBUGGER
5V_USB
5V_STEPDOWN
LED_RED D2
R16 470R
C30 10uF
C33 100nF
U8
Board
Sheet: /
File: OpenFC_STM32F405RG_HW.kicad_sch
Title:
Size: User
Date:
Rev:
KiCad E.D.A. 8.0.1
Id: 1/1