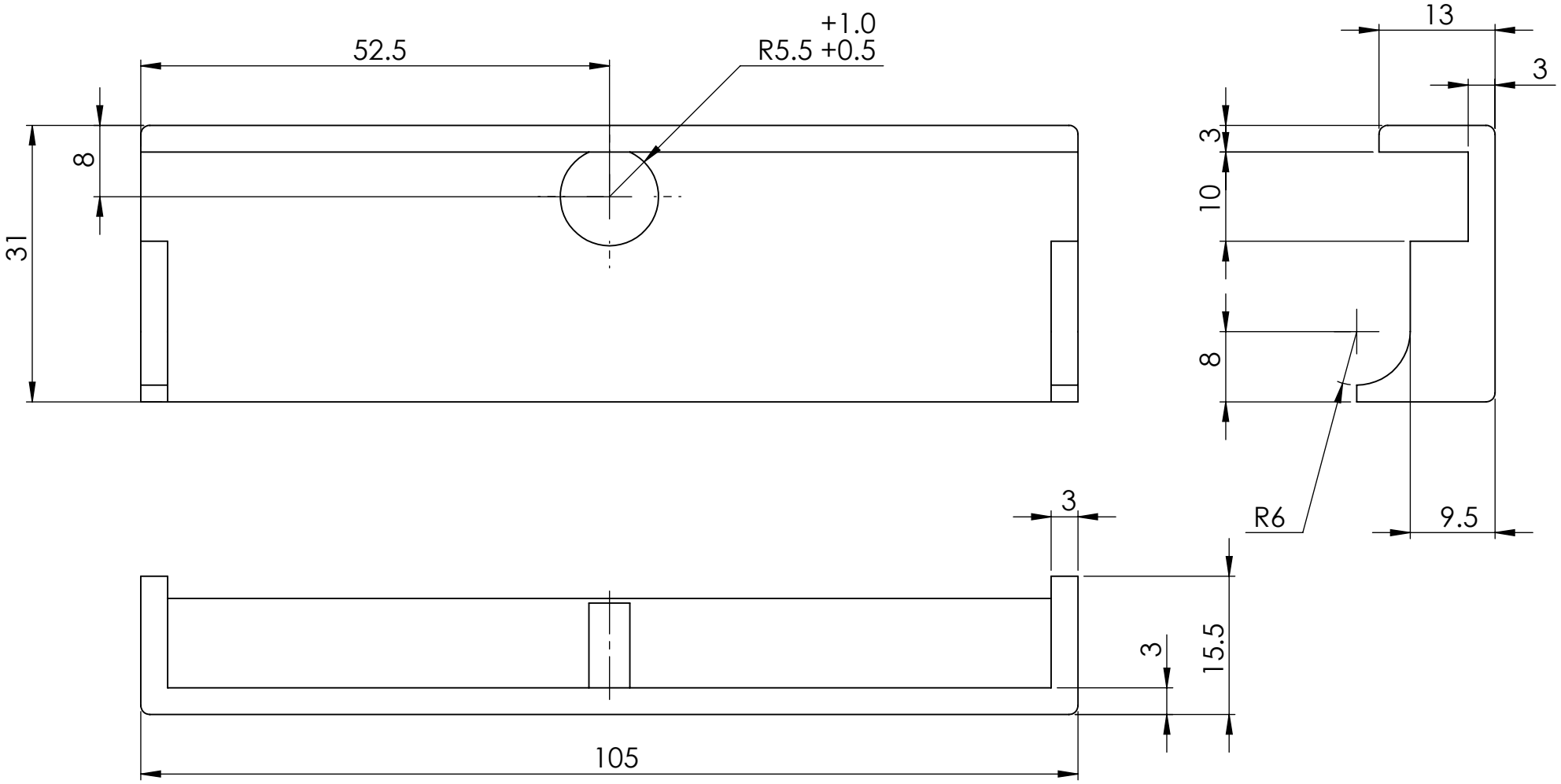


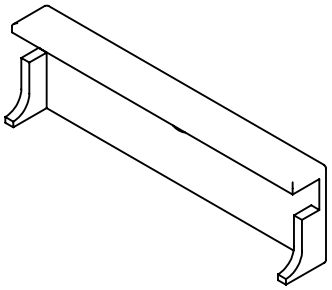

ISOMETRIC VIEW
SCALE 1:2

ALL FILLETS RADIUS 1MM
PART WILL BE 3D PRINTED
TOLERANCES BASED ON ADDITIVE MANUFACTURING
DRAWING TOLERANCES ONLY INDICATIVE

| TOLERANCES | | THIRD ANGLE PROJECTION |
|---|---|---|
| X = ± 0.5<br>X.X = ± 0.1<br>X.XX = ± 0.02 | ANGULAR ±1°<br>SURFACE FINISH MACHINED FACES Ra 6.3 | |

| | NAME | DATE |
|---|---|---|
| DRAWN | CALISTA LIM | 11.01.19 |
| CHECKED | ISABELLE SUA | 14.01.19 |
| APPROVED | | |

MATERIAL:
PLA

ALL DIMENSIONS ARE IN MILLIMETRES

DO NOT SCALE DRAWING

A4 | SCALE 3:2

TITLE:
SLOT CLAMP

DWG No.
PB-019

Imperial College London
Department of Mechanical Engineering

SHEET 1 OF 1 | REVISION 0