Up2Stream Mini User Manual

1. Introduction

Up2Stream Mini is WiFi and Bluetooth audio receiver board that can be easily integrated to your existing audio hardware devices to enable them with network and bluetooth streaming capability. With Up2Stream installed and using app 4STREAM, it allow you to stream music from cloud, phone, NAS, and famous streaming services, such as spotify, deezer, qobuz, tidal..etc. It also support multiroom and multizone control and music playback with multiple units connected .

2. Interface

L*W*H: 55.0*45.0*12mm Screw type: M3

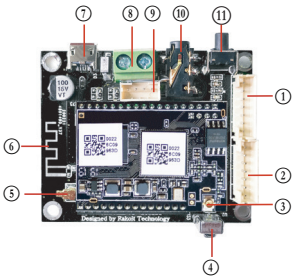

① Extension Port
② IIS-Out, SPDIF Out
③ WiFi Antenna
④ IR Receiver
⑤ External BT Antenna Connector
⑥ On-board Bluetooth Antenna
⑦ Micro USB (Power/Playback)
⑧ 5V 1A Power in
⑨ Line Out
⑩ 3.5mm Line-out
* ⑪ Power Button

LED Status :
Power on :White light on
System Booting :White light blink fast
Ready for Connection: White light blink slowly
Ready to play : White light on steady
Bluetooth Pairing: Blue light blink
Bluetooth Connected :Blue light on steady

*⑪ **Power Button:** Short press to power off and on; When in WiFi mode, long press (press and hold the button for more than 5 seconds) to reset WiFi settings and enter the paring mode; When in Bluetooth mode, long press to terminate current connection.

Further Notes

① **PH2.0-7P:BT_LED,WIFI_LED,GPIO2,GPIO1,ADC_KEY, GND,VCC_3V3 (top to bottom)**
GPIO2 and GPIO1 is used to connect a coding key, should be used for volume control. KEY is a ADC key port, reference the diagram below for key definitions. BT_LED, WIFI_LED are used to extend the LED, and are common-anode connected. You should connect 3.3V to a current limit resister and then to LED and then to the pin. (reference the diagram below)

② **PH2.0-7P: SPDIF, MCLK, IIS_DATA, BCLK, LRCK, GND, VCC_3V3:**
This is the digital audio output extension. For the IIS, BCLK is 2.8MHz, the LRCK is 44.1KHz, the MCLK is 11.288MHz, the DOUT following the standard IIS data format and have 16 bits depth. The system is running in master mode, you should make sure the IIS port of connected device is running in slave mode.

⑨ **PH2.0-4P: ROUT, GND, LOUT, GND**: For analog output to amplifier board, it has same signal with the 3.5mm Aux jack.

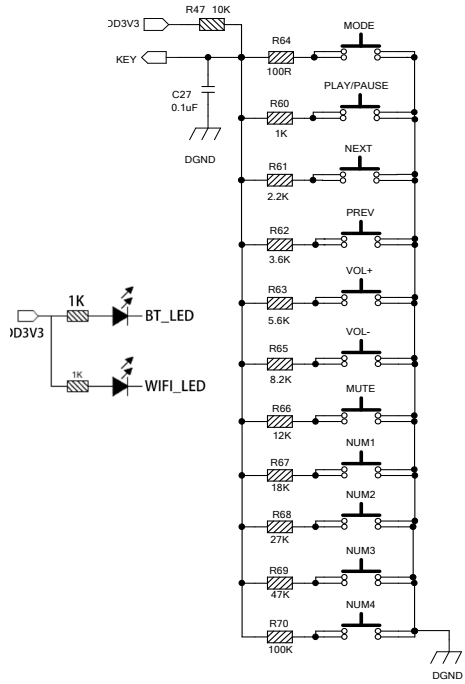

3. Connection Diagram

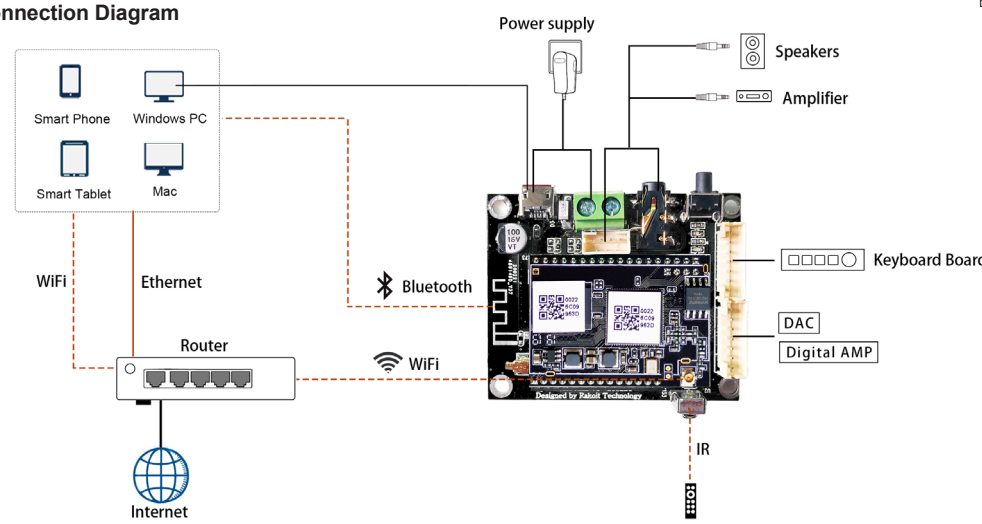

4. Specification

Connectivity	Wireless network	IEEE802.11 b/g/n 2.4G
	Bluetooth	5.0 SBC/AAC
Power Input *		5V-1A/2 pin connector
		5V-1A micro USB input
Audio output		Analog 3.5mm/4 pin connector
		Digital I2S, SPDIF(44.1KHz)
Frequency response		20Hz to 20kHz
SNR		100dB @ 0dBFS, 1KHz
THD+N		0.03% @ 0dBFS, 1KHz

Music Format	FLAC/MP3/AAC/AAC+/ALAC/APE/WAV
Decoding	Up to 24bit/192kHz
Protocols	AirPlay, DLNA, UPnP, Spotify Connect, Qplay
NAS Support	NAS with DLNA support
Dimensions	55*45*12mm
Accessory	7Pin 220mm PH2.0 Cable 4Pin 220mm PH2.0 Cable 2Pin 220mm Power Cable User Manual

* Warning: Up2Stream Mini must use 5V-1A DC input, higher voltage power supply may damage the board.

5. How To Use

5.1 App download

Download the 4STREAM application from App Store for iOS based devices and Google Play Store for Android based devices.
The application supports English, Spanish, French, German, Italian, Portugese, Korean, Simplified Chinese,Traditional Chinese and Japanese

5.2 First time usage & WiFi Setup:

1. Hold the RESET button then plug in the power cable.
2. The LED light will start flashing, release the button and wait till the LED flash slowly.
3. Goto your mobile WiFi settings and search for SoundSystem_xxxx WiFi and connect.
*If you cannot find SoundSystem connection, long press the RESET button for 5 secs and then refresh your mobile's WiFi listing.
4. Open 4Stream APP and there will be 2 options: Direct Mode & Add Device.
5. Direct Mode: If you don't have router, please choose direct mode. After connected, you can play music store in your mobile.
6. Add Device: After you choose add device, select the router SSID you want your Up2stream device connect to (enter password if required) and select continue.
7. Once connected, you can change the name of the device. You can select a preset one or enter your own.
8. After you define the name of the device, you will see it appears in the device list in 4stream app and now you can start streaming music.
*If you change to another router, or the password of the connected router has been changed, please long press RESET button for 5 secs in WiFi mode to reset the connection.
* Hold RESET button then plug in the power can force the device to enter WiFi mode. If you have setup router connection before, the device will auto connect to that router.

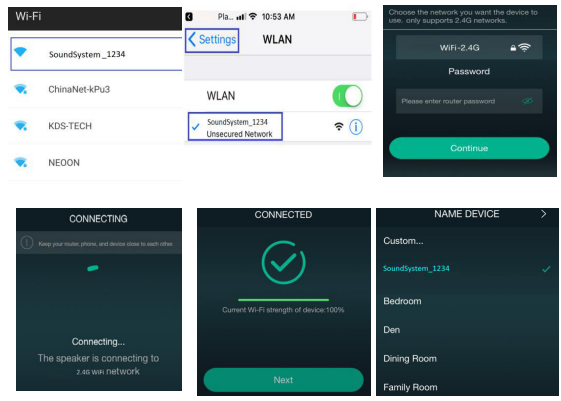

*Attention for Android users
Different brand mobile phones may ask you to allow to use SoundSystem WiFi network, please choose yes, if not, you may not able to set up successfully .
It may also ask you to authorize other things, please choose yes or it may affect your usage.

5.3 Bluetooth

To use bluetooth ,please swtich to bluetooth via app or by remote controller,then find bluetooth device SoundSystem_XXXX from your phone bluetooth setting and pair it .

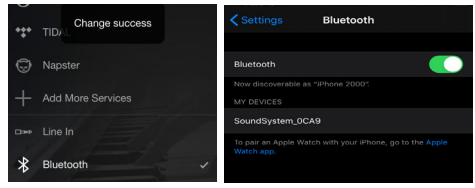

5.4 USB audio

Connect the Up2Stream Mini to your PC with USB cable (make sure it's a data cable including the signal wires). The PC will automatically discover a USB sound card, and when you activated it as the system main output, the PC will send the audio output over Up2Stream Mini in digital (44.1KHz/16bits).
You can stream to other Up2Stream devices over multiroom connection.
NOTE: there's about 3 seconds delay for multiroom slave devices.

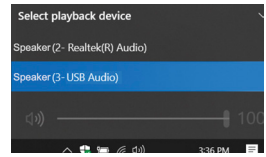

5.5 Audio Effects Tool

Connect the Up2Stream Mini to your PC with USB cable (make sure it's a data cable including the signal wires). And open the program ACPWorkbench (only support Windows.), and you can tune audio effects conveniently, including Music Noise Suppressor, Virtual Bass, Stereo Widener, Exciter, 10 bands EQ, etc. After editing the audio effects, you can save the changes to the device so the tuned effects will remain. You can get ACPWorkbench from our website **www.arylic.com**

5.6 Firmware update

The application will notify you in app when there is a new firmware version available.It's recommended to update firmware whenever available as this might not only correct bugs or improve security,but also can add new features or services.

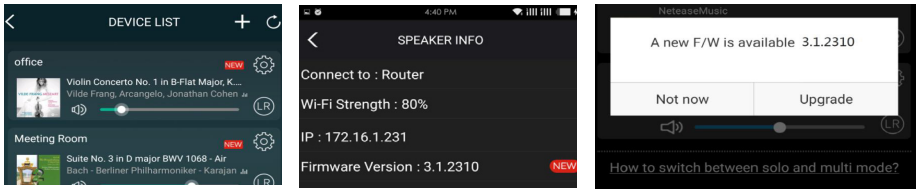

Scan the QR codes below for more

Complete User Manual | www.arylic.com | 4STREAM App | Facebook: arylicme | YouTube:Arylic

Support: info@arylic.com