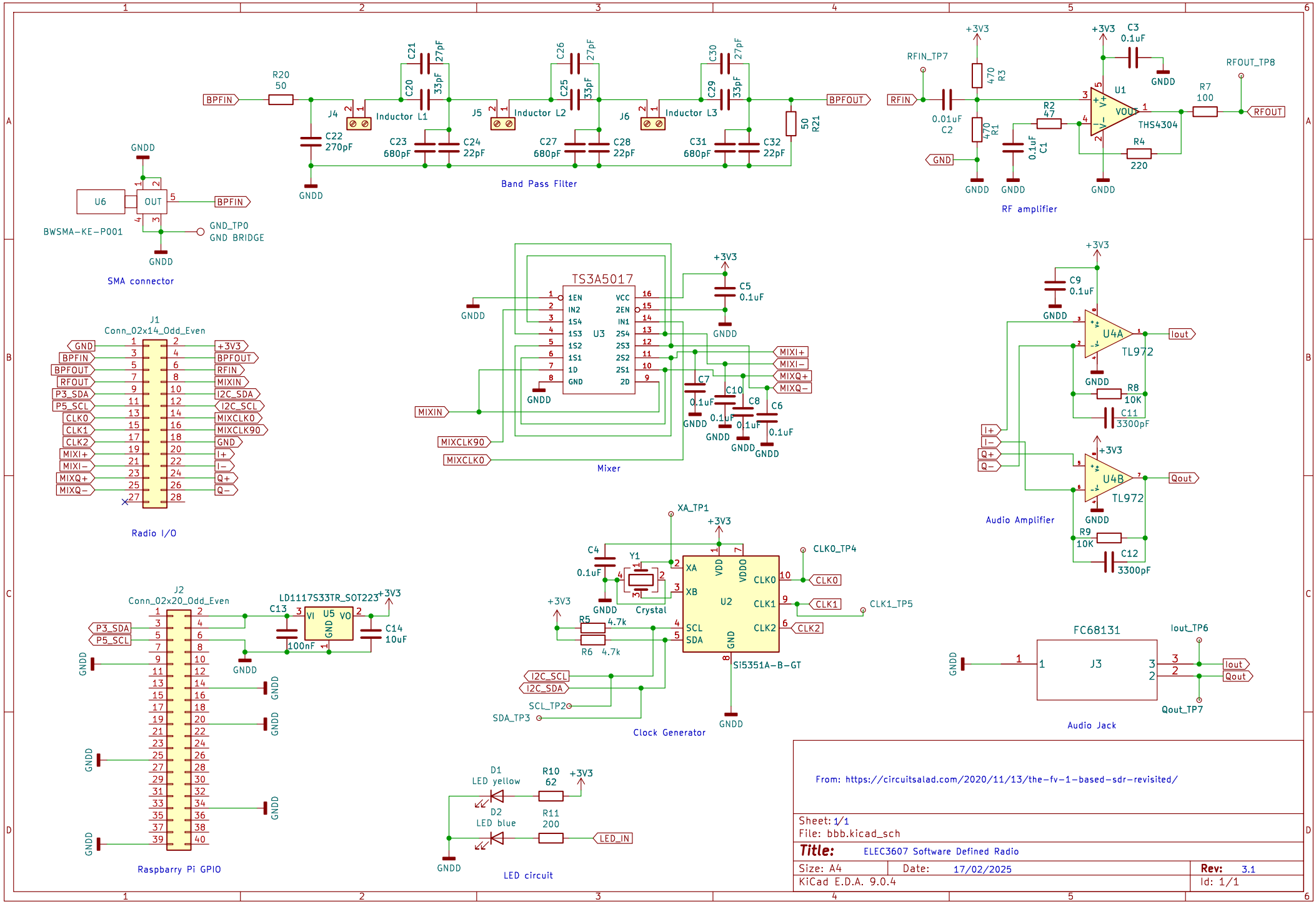
Band Pass Filter
RF amplifier
SMA connector
Mixer
Radio I/O
Audio Amplifier
Clock Generator
Audio Jack
Raspberry Pi GPIO
LED circuit
TS3A5017
THS4304
TL972
Si5351A-B-GT
FC68131
BWSMA-KE-P001
Conn_02x14_Odd_Even
Conn_02x20_Odd_Even
LD1117S33TR_SOT223
Inductor L1
Inductor L2
Inductor L3
Crystal
LED yellow
LED blue
From: https://circuitsalad.com/2020/11/13/the-fv-1-based-sdr-revisited/
Sheet: 1/1
File: bbb.kicad_sch
Title: ELEC3607 Software Defined Radio
Size: A4
Date: 17/02/2025
Rev: 3.1
KiCad E.D.A. 9.0.4
Id: 1/1