GRID LOCATION	
B1	A-B/3

GENERAL NOTES: All Holes Are: 22.0 mm U.N.O
All Welds Are: 6.0 mm U.N.O

MATERIAL LIST FOR ASSEMBLY B1 1 Nos. RQD

Mark	Profile	Material	No.	Length	Area	Weight
1	FLT10*60	S275	1	381	0.1	1.8
2	PL8*155	S275	1	249	0.1	2.4
3	FLT8*60	S275	1	377	0.1	1.4
b1	UB406*140*46	S235	1	7500	10.2	347.4
				Total	10.4	353.0

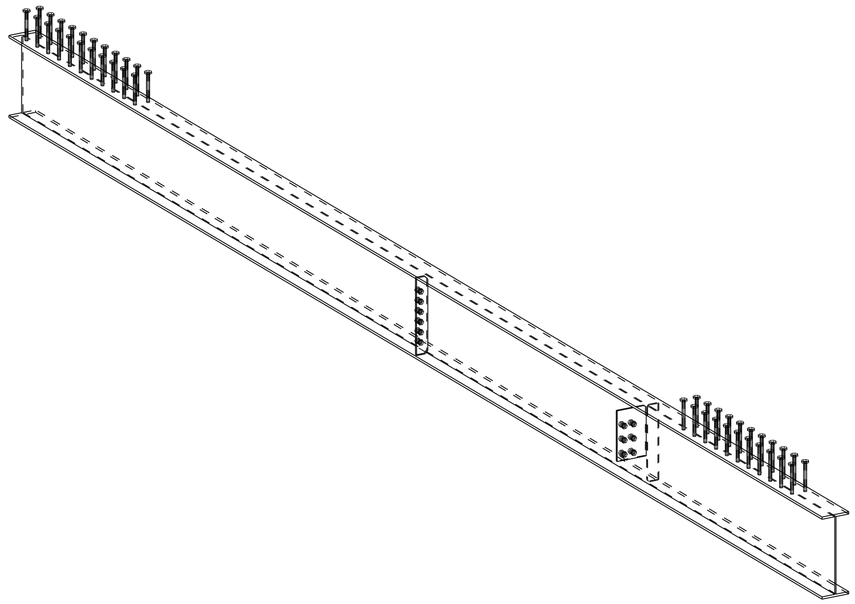

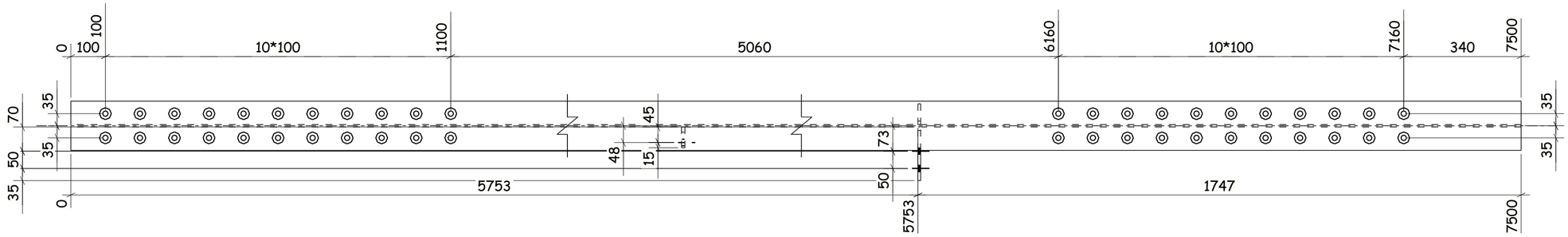

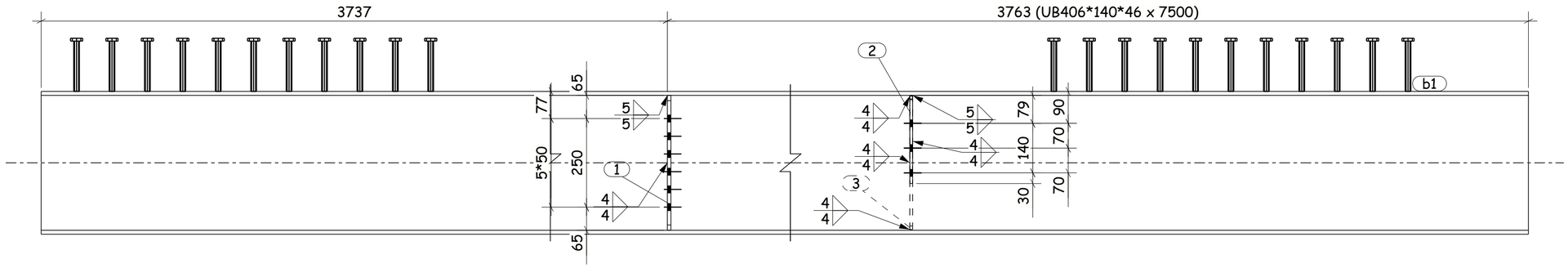

1 Nos. BEAM REQUIRED AS DRAWN MARKED B1

REV	DESCRIPTION	DWN	CHK	DATE

PROJECT: Tekla Model

NO: 500-103

CONTRACTOR:

Powered by Tekla Trimble

CLIENT:

TITLE:
Title 1
Title 2
Title 3

DWG NO: B.1 SCALE: 1:10 REV: A2