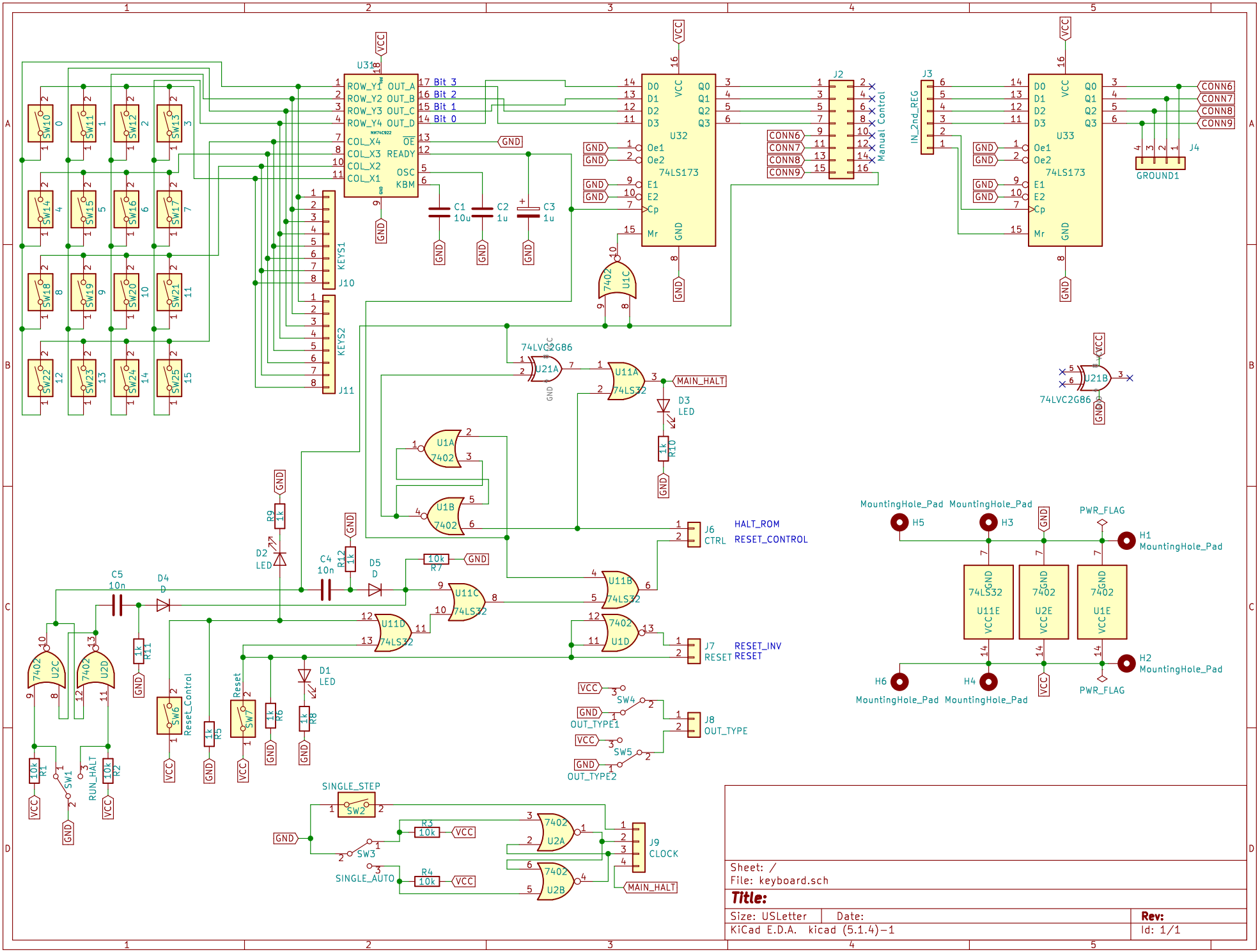
U31
NM74C922
ROW_Y1 OUT_A
ROW_Y2 OUT_B
ROW_Y3 OUT_C
ROW_Y4 OUT_D
COL_X4 OE
COL_X3 READY
COL_X2
COL_X1 OSC
KBM
Bit 3
Bit 2
Bit 1
Bit 0
KEYS1
J10
KEYS2
J11
U32
74LS173
U33
J2
Manual Control
J3
IN_2nd_REG
J4
GROUND1
CONN6
CONN7
CONN8
CONN9
C1 10u
C2 1u
C3 1u
U21A
74LVC2G86
U21B
U11A
74LS32
MAIN_HALT
D3 LED
R10 1k
U1A 7402
U1B 7402
U1C 7402
R9 1k
D2 LED
C4 10n
R12 1k
D5 D
R7 10k
U11B 74LS32
U11C 74LS32
U11D 74LS32
U1D 7402
J6 CTRL
HALT_ROM
RESET_CONTROL
J7 RESET
RESET_INV
RESET
C5 10n
D4 D
R11 1k
U2C 7402
U2D 7402
R1 10k
R2 10k
SW1
RUN_HALT
SW6
Reset_Control
R5 1k
SW7
Reset
R6 1k
D1 LED
R8 1k
SW4
SW5
OUT_TYPE1
OUT_TYPE2
J8 OUT_TYPE
SW2
SINGLE_STEP
SW3
SINGLE_AUTO
R3 10k
R4 10k
U2A 7402
U2B 7402
J9 CLOCK
MAIN_HALT
MountingHole_Pad
H5
H3
H1
H6
H4
H2
PWR_FLAG
U11E 74LS32
U2E 7402
U1E 7402
VCC
GND
Sheet: /
File: keyboard.sch
Title:
Size: USLetter
Date:
Rev:
KiCad E.D.A. kicad (5.1.4)-1
Id: 1/1