phyCORE-i.MX 93 BSP Manual PD24.2.0

PHYTEC Messtechnik GmbH

Sep 02, 2025

CONTENTS

1 Supported Hardware **3**
1.1 phyBOARD-Segin i.MX 93 Components . . . 3
1.2 phyBOARD-Nash i.MX 93 Components . . . 3

2 Getting Started **7**
2.1 Get the Image . . . 7
2.2 Write the Image to SD Card . . . 7
2.3 First Start-up . . . 10

3 Building the BSP **11**
3.1 Basic Set-Up . . . 11
3.2 Get the BSP . . . 11

4 Installing the OS **15**
4.1 Bootmode Switch (S3) . . . 15
4.2 Flash eMMC . . . 17
4.3 RAUC . . . 21

5 Development **23**
5.1 Host Network Preparation . . . 23
5.2 Booting the Kernel from a Network . . . 25
5.3 Working with UUU-Tool . . . 26
5.4 Standalone Build preparation . . . 28
5.5 U-Boot standalone build . . . 29
5.6 Kernel standalone build . . . 32
5.7 Format SD card . . . 33
5.8 Enabling JTAG Debug Interface on phyBOARD Nash . . . 39

6 Device Tree (DT) **41**
6.1 Introduction . . . 41
6.2 PHYTEC i.MX 93 BSP Device Tree Concept . . . 41

7 Accessing Peripherals **45**
7.1 i.MX 93 Pin Muxing . . . 45
7.2 Network . . . 46
7.3 SD card . . . 49
7.4 e.MMC Devices . . . 50
7.5 GPIOs . . . 57
7.6 ADC . . . 60
7.7 LEDs . . . 60
7.8 I²C Bus . . . 60

7.9 EEPROM . . . 61
7.10 RTC . . . 62
7.11 USB Host Controller . . . 64
7.12 RS232/RS485 . . . 65
7.13 CAN FD . . . 66
7.14 Audio on phyBOARD-Segin i.MX 93 . . . 67
7.15 Audio on phyBOARD-Nash i.MX 93 . . . 69
7.16 Video . . . 71
7.17 Display . . . 72
7.18 Power Management . . . 73
7.19 Thermal Management . . . 75
7.20 Watchdog . . . 77
7.21 bbnsm Power Key . . . 77
7.22 PXP . . . 77
7.23 On-Chip OTP Controller (OCOTP_CTRL) - eFuses . . . 78
7.24 TPM . . . 79

8 i.MX 93 M33 Core **81**
8.1 Running M33 Core Examples . . . 81

i.MX 93 BSP Manual	
Document Title	i.MX 93 BSP Manual
Document Type	BSP Manual
Yocto Manual	Scarthgap
Release Date	2024/10/08
Is Branch of	i.MX 93 BSP Manual

The table below shows the Compatible BSPs for this manual:

Compatible BSPs	BSP Release Type	BSP Release Date	BSP Status
BSP-Yocto-NXP-i.MX93-PD24.2.0	Major	2024/10/08	Released

This BSP manual guides you through the installation and creation steps for the Board Support Package (BSP) and describes how to handle the interfaces for the **phyBOARD-Segin i.MX 93 and phyBOARD-Nash i.MX 93 Kit**. Furthermore, this document describes how to create BSP images from the source code. This is useful for those who need to change the default image and need a way to implement these changes in a simple and reproducible way. Further, some sections of this manual require executing commands on a personal computer (host). Any and all of these commands are assumed to be executed on a Linux Operating System.

Note

This document contains code examples that describe the communication with the board over the serial shell. The code examples lines begin with "host:~$", "target:~$" or "u-boot=>". This describes where the commands are to be executed. Only after these keywords must the actual command be copied.

PHYTEC provides a variety of hardware and software documentation for all of its products. This includes any or all of the following:

- **QS Guide**: A short guide on how to set up and boot a phyCORE based board.
- **Hardware Manual**: A detailed description of the System-on-Module and accompanying carrierboard.
- **Yocto Guide**: A comprehensive guide for the Yocto version the phyCORE uses. This guide contains an overview of Yocto; introducing, installing, and customizing the PHYTEC BSP; how to work with programs like Poky and Bitbake; and much more.
- **BSP Manual**: A manual specific to the BSP version of the phyCORE. Information such as how to build the BSP, booting, updating software, device tree, and accessing peripherals can be found here.
- **Development Environment Guide**: This guide shows how to work with the Virtual Machine (VM) Host PHYTEC has developed and prepared to run various Development Environments. There are detailed step-by-step instructions for Eclipse and Qt Creator, which are included in the VM. There are instructions for running demo projects for these programs on a phyCORE product as well. Information on how to build a Linux host PC yourself is also a part of this guide.
- **Pin Muxing Table**: phyCORE SOMs have an accompanying pin table (in Excel format). This table will show the complete default signal path, from the processor to the carrier board. The default device tree muxing option will also be included. This gives a developer all the information needed in one location to make muxing changes and design options when developing a specialized carrier board or adapting a PHYTEC phyCORE SOM to an application.

On top of these standard manuals and guides, PHYTEC will also provide Product Change Notifications, Application Notes, and Technical Notes. These will be done on a case-by-case basis. Most of the documentation

can be found on the https://www.phytec.de/produkte/system-on-modules/phycore-imx-91-93/#downloads of our product.

CHAPTER

ONE

SUPPORTED HARDWARE

On our web page, you can see all supported Machines with the available Article Numbers for this release: BSP-Yocto-NXP-i.MX93-PD24.2.0, see download.

If you choose a specific **Machine Name** in the section **Supported Machines**, you can see which **Article Numbers** are available under this machine and also a short description of the hardware information. In case you only have the **Article Number** of your hardware, you can leave the **Machine Name** drop-down menu empty and only choose your **Article Number**. Now it should show you the necessary **Machine Name** for your specific hardware.

Tip

Console examples in this BSP manual only focus on phyBOARD-Segin i.MX 93. Similar commands can also be executed for/on phyBOARD-Nash i.MX 93

1.1 phyBOARD-Segin i.MX 93 Components

1.2 phyBOARD-Nash i.MX 93 Components

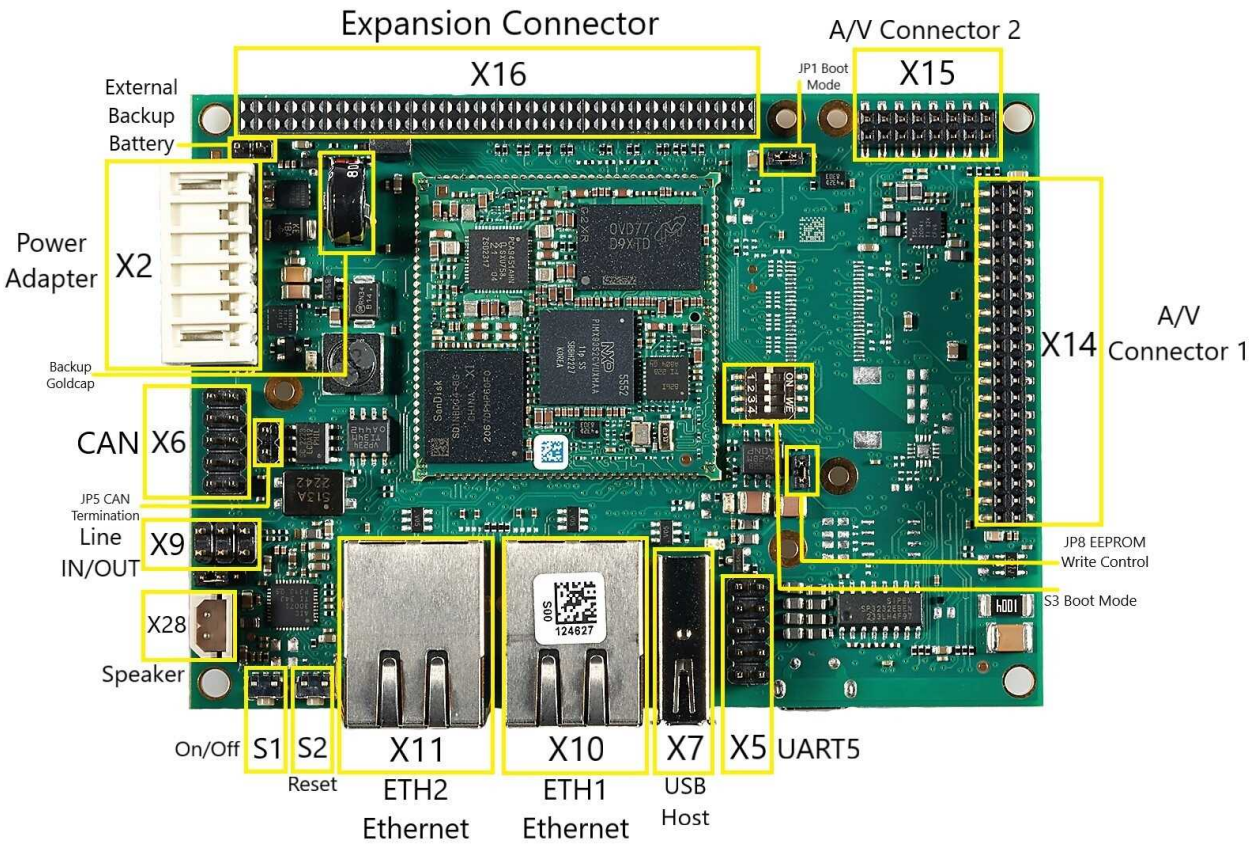

Fig. 1: **phyBOARD-Segin i.MX 93 Components (top)**

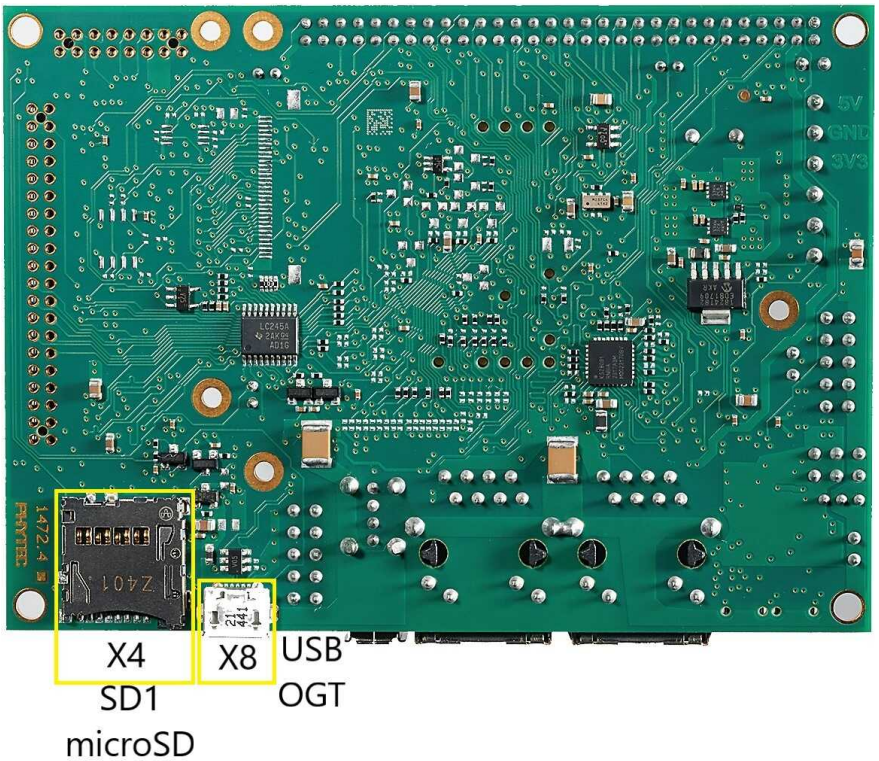

Fig. 2: **phyBOARD-Segin i.MX 93 Components (bottom)**

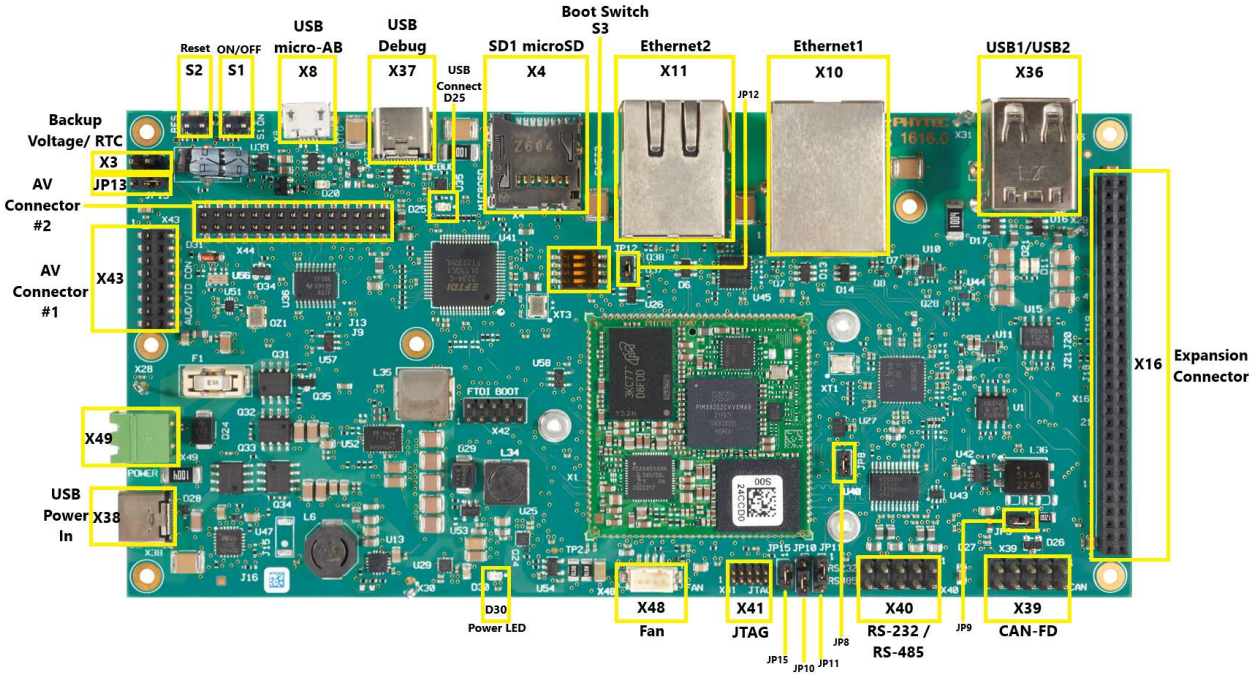

Fig. 3: **phyBOARD-Nash i.MX 93 Components (top)**

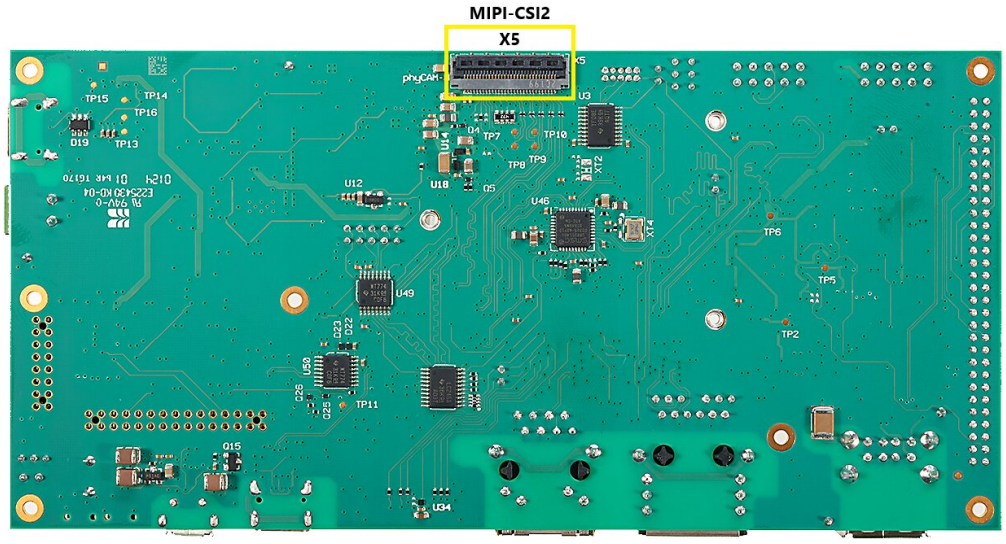

Fig. 4: **phyBOARD-Nash i.MX 93 Components (bottom)**

CHAPTER

TWO

GETTING STARTED

The **phyBOARD-Segin i.MX 93 and phyBOARD-Nash i.MX 93 Kit** is shipped with a pre-flashed SD card. It contains the phytec-qt6demo-image and can be used directly as a boot source. The e.MMC is programmed with only a U-Boot by default. You can get all sources from the PHYTEC download server. This chapter explains how to flash a BSP image to SD card and how to start the board.

There are several ways to flash an image to SD card or even e.MMC. Most notably using simple, sequential writing with the Linux command line tool `dd`. An alternative way is to use PHYTEC's system initialization program called partup, which makes it especially easy to format more complex systems. You can get prebuilt Linux binaries of partup from its release page. Also read partup's README for installation instructions.

2.1 Get the Image

The image contains all necessary files and makes sure partitions and any raw data are correctly written. Both the partup package and the WIC image, which can be flashed using `dd`, can be downloaded from the PHYTEC download server.

Get either the partup package or the WIC image from the download server:

```
host:~$ wget https://download.phytec.de/Software/Linux/BSP-Yocto-i.MX93/BSP-Yocto-NXP-i.MX93-
↪PD24.2.0/images/ampliphy-vendor-wayland/phyboard-segin-imx93-2/phytec-qt6demo-image-phyboard-
↪segin-imx93-2.rootfs.partup
host:~$ wget https://download.phytec.de/Software/Linux/BSP-Yocto-i.MX93/BSP-Yocto-NXP-i.MX93-
↪PD24.2.0/images/ampliphy-vendor-wayland/phyboard-segin-imx93-2/phytec-qt6demo-image-phyboard-
↪segin-imx93-2.rootfs.wic.xz
```

Note

For e.MMC, more complex partitioning schemes or even just large images, we recommend using the partup package, as it is faster in writing than `dd` and allows for a more flexible configuration of the target flash device.

2.2 Write the Image to SD Card

Warning

To create your bootable SD card, you must have root privileges on your Linux host PC. Be very careful when specifying the destination device! All files on the selected device will be erased immediately without any further query!

Selecting the wrong device may result in **data loss** and e.g. could erase your currently running system on your host PC!

2.2.1 Finding the Correct Device

To create your bootable SD card, you must first find the correct device name of your SD card and possible partitions. If any partitions of the SD cards are mounted, unmount those before you start copying the image to the SD card.

1. In order to get the correct device name, remove your SD card and execute:

```
host:~$ lsblk
```

2. Now insert your SD card and execute the command again:

```
host:~$ lsblk
```

3. Compare the two outputs to find the new device names listed in the second output. These are the device names of the SD card (device and partitions if the SD card was formatted).
4. In order to verify the device names being found, execute the command `sudo dmesg`. Within the last lines of its output, you should also find the device names, e.g. `/dev/sde` or `/dev/mmcblk0` (depending on your system).

Alternatively, you may use a graphical program of your choice, like GNOME Disks or KDE Partition Manager, to find the correct device.

Now that you have the correct device name, e.g. `/dev/sde`, you can see the partitions which must be unmounted if the SD card is formatted. In this case, you will also find the device name with an appended number (e.g. `/dev/sde1`) in the output. These represent the partitions. Some Linux distributions automatically mount partitions when the device gets plugged in. Before writing, however, these need to be unmounted to avoid data corruption.

Unmount all those partitions, e.g.:

```
host:~$ sudo umount /dev/sde1
host:~$ sudo umount /dev/sde2
```

Now, the SD card is ready to be flashed with an image, using either `partup`, `dd` or `bmaptool`.

2.2.2 Using bmaptool

One way to prepare an SD card is using bmaptool. Yocto automatically creates a block map file (`<IMAGENAME>-<MACHINE>.wic.bmap`) for the WIC image that describes the image content and includes checksums for data integrity. *bmaptool* is packaged by various Linux distributions. For Debian-based systems install it by issuing:

```
host:~$ sudo apt install bmap-tools
```

Flash a WIC image to SD card by calling:

```
host:~$ bmaptool copy phytec-qt6demo-image-phyboard-segin-imx93-2?(.rootfs).wic?(.xz) /dev/<your_
↪device>
```

Replace <your_device> with your actual SD card's device name found previously, and make sure to place the file `<IMAGENAME>-<MACHINE>.wic.bmap` alongside the regular WIC image file, so bmaptool knows which blocks to write and which to skip.

Warning

bmaptool only overwrites the areas of an SD card where image data is located. This means that a previously written U-Boot environment may still be available after writing the image.

2.2.3 Using partup

Writing to an SD card with partup is done in a single command:

```
host:~$ sudo partup install phytec-qt6demo-image-phyboard-segin-imx93-2?(.rootfs).partup /dev/
↪<your_device>
```

Make sure to replace <your_device> with your actual device name found previously.

Further usage of partup is explained at its official documentation website.

Warning

Host systems which are using resize2fs version 1.46.6 and older (e.g. Ubuntu 22.04) are not able to write partup packages created with Yocto Mickledore or newer to SD-Card. This is due to a new default option in resize2fs which causes an incompatibility. See release notes.

Note

partup has the advantage of allowing to clear specific raw areas in the MMC user area, which is used in our provided partup packages to erase any existing U-Boot environments. This is a known issue *bmaptool* does not solve, as mentioned in the previous chapter.

Another key advantage of partup over other flashing tools is that it allows configuring MMC specific parts, like writing to eMMC boot partitions, without the need to call multiple other commands when writing.

2.2.4 Using `dd`

After having unmounted all SD card's partitions, you can create your bootable SD card.

Some PHYTEC BSPs produce uncompressed images (with filename-extension *.wic), and some others produce compressed images (with filename-extension *.wic.xz).

To flash an uncompressed images (*.wic) use command below:

```
host:~$ sudo dd if=phytec-qt6demo-image-phyboard-segin-imx93-2?(.rootfs).wic of=/dev/<your_
↪device> bs=1M conv=fsync status=progress
```

Or to flash a compressed images (*.wic.xz) use that command:

```
host:~$ xzcat phytec-qt6demo-image-phyboard-segin-imx93-2?(.rootfs).wic.xz | sudo dd of=/dev/
↪<your_device> bs=1M conv=fsync status=progress
```

Again, make sure to replace <your_device> with your actual device name found previously.

The parameter `conv=fsync` forces a sync operation on the device before `dd` returns. This ensures that all blocks are written to the SD card and none are left in memory. The parameter `status=progress` will print out information on how much data is and still has to be copied until it is finished.

2.3 First Start-up

- To boot from an SD card, the *bootmode switch (S3)* needs to be set to the following position:

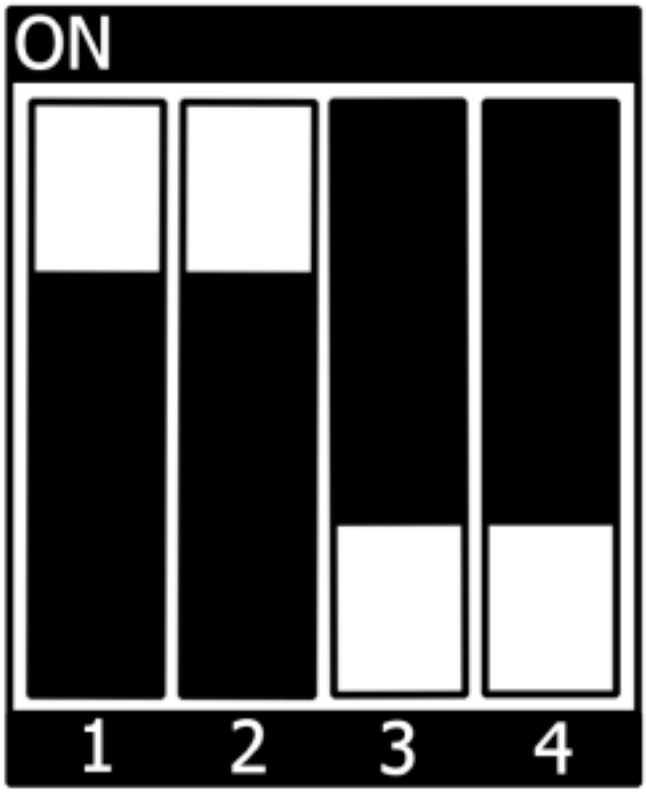

- Insert the SD card
- Connect the targets debug console with your host. Use UART1 console on PEB-EVAL-01 for **phyBOARD-Segin** and X-37 USB-C debug for **phyBOARD-Nash**.
- Power up the board
- Open serial/usb port with 115200 baud and 8N1 (you should see u-boot/linux start on the console

CHAPTER

THREE

BUILDING THE BSP

This section will guide you through the general build process of the i.MX 93 BSP using Yocto and the phyLinux script. For more information about our meta-layer or Yocto in general visit: Yocto Reference Manual (scarthgap).

3.1 Basic Set-Up

If you have never created a Phytec BSP with Yocto on your computer, you should take a closer look at the chapter BSP Workspace Installation in the Yocto Reference Manual (scarthgap).

3.2 Get the BSP

There are two ways to get the BSP sources. You can download the complete BSP sources from our download page: BSP-Yocto-i.MX93; or you can fetch and build it yourself with Yocto. This is particularly useful if you want to make customizations.

The phyLinux script is a basic management tool for PHYTEC Yocto BSP releases written in Python. It is mainly a helper to get started with the BSP sources structure.

- Create a fresh project folder, get phyLinux, and make the script executable:

```
host:~$ mkdir ~/yocto
host:~$ cd yocto/
host:~/yocto$ wget https://download.phytec.de/Software/Linux/Yocto/Tools/phyLinux
host:~/yocto$ chmod +x phyLinux
```

> **Warning**
>
> A clean folder is important because phyLinux will clean its working directory. Calling phyLinux from a directory that isn't empty will result in a warning.

- Run phyLinux:

```
host:~/yocto$ ./phyLinux init
```

> **Note**
>
> On the first initialization, the phyLinux script will ask you to install the Repo tool in your `/usr/local/bin` directory.

- During the execution of the init command, you need to choose your processor platform (SoC), PHYTEC's BSP release number, and the hardware you are working on.

> **Note**
>
> If you cannot identify your board with the information given in the selector, have a look at the invoice for the product. And have a look at our BSP.

- It is also possible to pass this information directly using command line parameters:

```
host:~/yocto$ DISTRO=ampliphy-vendor-wayland MACHINE=phyboard-segin-imx93-2 ./phyLinux init␣
↪-p imx93 -r BSP-Yocto-NXP-i.MX93-PD24.2.0
```

After the execution of the init command, phyLinux will print a few important notes. For example, it will print your git identity, SOC and BSP release which was selected as well as information for the next steps in the build process.

3.2.1 Starting the Build Process

- Set up the shell environment variables:

```
host:~/yocto$ source sources/poky/oe-init-build-env
```

> **Note**
>
> This needs to be done every time you open a new shell for starting builds.

- The current working directory of the shell should change to build/.
- Open the main configuration file and accept the GPU and VPU binary license agreements. Do this by uncommenting the corresponding line, as below.

```
host:~/yocto/build$ vim conf/local.conf
# Uncomment to accept NXP EULA
# EULA can be found under ../sources/meta-freescale/EULA
ACCEPT_FSL_EULA = "1"
```

- Build your image:

```
host:~/yocto/build$ bitbake phytec-qt6demo-image
```

> **Note**
>
> For the first build we suggest starting with our smaller non-graphical image phytec-headless-image to see if everything is working correctly.
>
> ```
> host:~/yocto/build$ bitbake phytec-headless-image
> ```
>
> The first compile process takes about 40 minutes on a modern Intel Core i7. All subsequent builds will use the filled caches and should take about 3 minutes.

3.2.2 BSP Images

All images generated by Bitbake are deployed to `~/yocto/build/deploy*/images/<machine>`. The following list shows for example all files generated for the phyboard-segin-imx93-2 machine:

- **u-boot.bin**: Binary compiled U-boot bootloader (U-Boot). Not the final Bootloader image!
- **oftree**: Default kernel device tree
- **u-boot-spl.bin**: Secondary program loader (SPL)
- **bl31-imx93.bin**: ARM Trusted Firmware binary
- **lpddr4_dmem_1d_v202201.bin, lpddr4_dmem_2d_v202201.bin, lpddr4_imem_1d_v202201.bin, lpddr4_imem_2d_v202201.bin**: DDR PHY firmware images
- **imx-boot**: Bootloader build by imx-mkimage which includes SPL, U-Boot, ARM Trusted Firmware and DDR firmware. This is the final bootloader image which is bootable.
- **Image**: Linux kernel image
- **Image.config**: Kernel configuration
- **imx93-phyboard-*.dtb**: Kernel device tree file
- **imx93-phy*.dtbo**: Kernel device tree overlay files
- **phytec-*.tar.gz**: Root file system, of bitbake-image that was built.
  - **phytec-qt6demo-image-phyboard-*-imx93-*.tar.gz**: when bitbake-build was processed for `phytec-qt6demo-image`
  - **phytec-headless-image-phyboard-*-imx93-*.tar.gz**: when bitbake-build was processed for `phytec-headless-image`
- **phytec-*.rootfs.wic.xz**: Compressed bootable SD card image of bitbake-image that was built. Includes bootloader, DTBs, Kernel and Root file system.
  - **phytec-qt6demo-image-phyboard-*-imx93-*.rootfs.wic.xz**: when bitbake-build was processed for `phytec-qt6demo-image`
  - **phytec-headless-image-phyboard-*-imx93-*.rootfs.wic.xz**: when bitbake-build was processed for `phytec-headless-image`
- **imx93-11x11-evk_m33_*.bin**, binaries of demo applications for the Cortex-M33 MCU; can be manually loaded and started with U-Boot or Linux

CHAPTER

FOUR

INSTALLING THE OS

4.1 Bootmode Switch (S3)

Tip

Hardware revision baseboard:

- phyBOARD-Segin i.MX 93: 1472.5
- phyBOARD-Nash i.MX 93: 1616.0, 1616.1

The phyBOARD-Segin/Nash i.MX 93 features a boot switch with four individually switchable ports to select the phyCORE-i.MX 93 default bootsource.

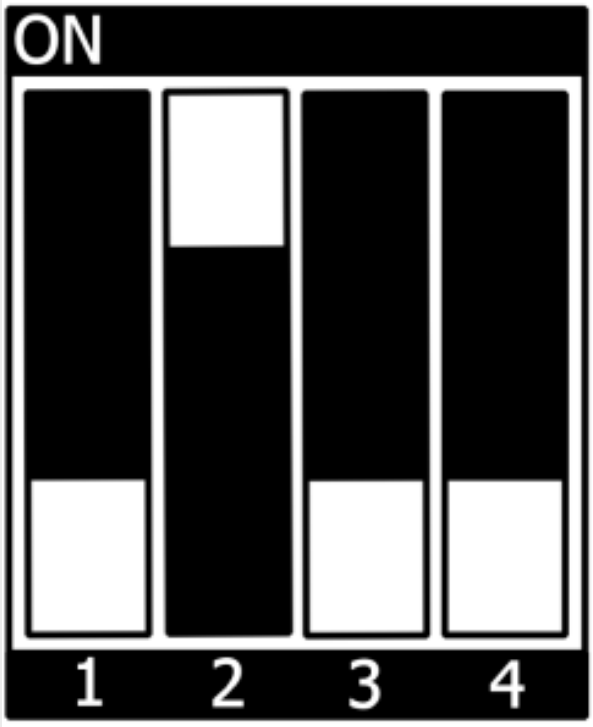

Fig. 1: eMMC

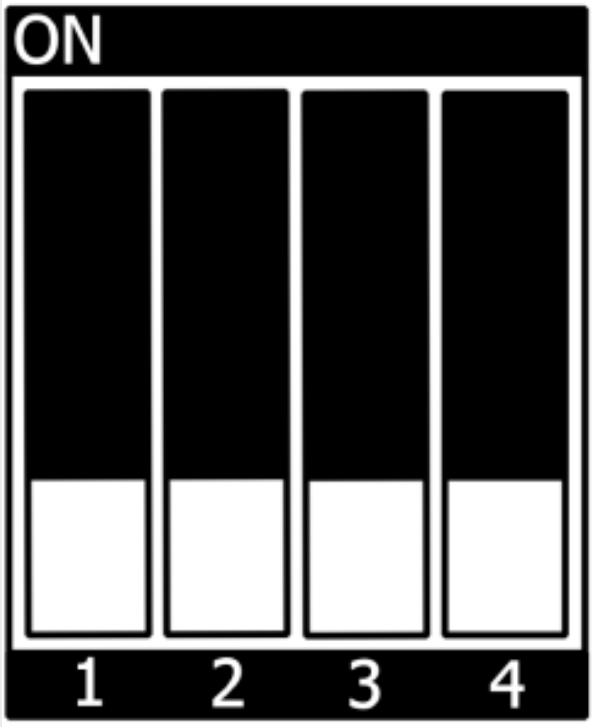

Fig. 2: Internal Fuses

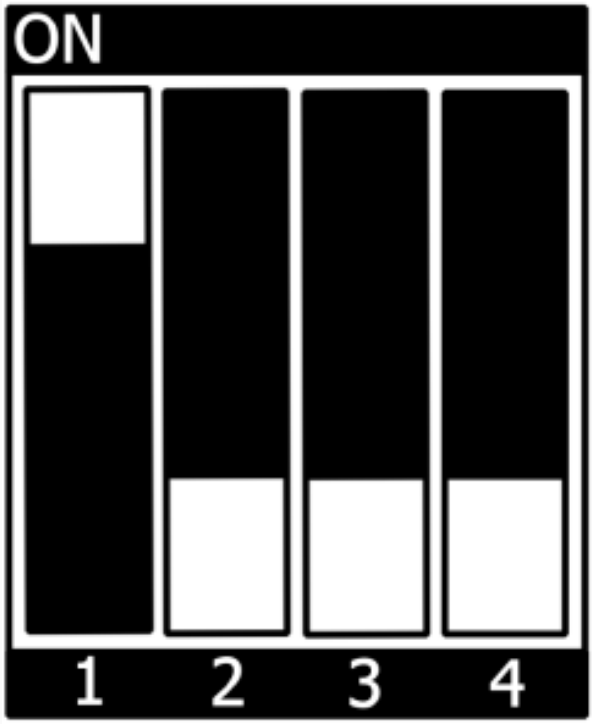

Fig. 3: USB Serial Download

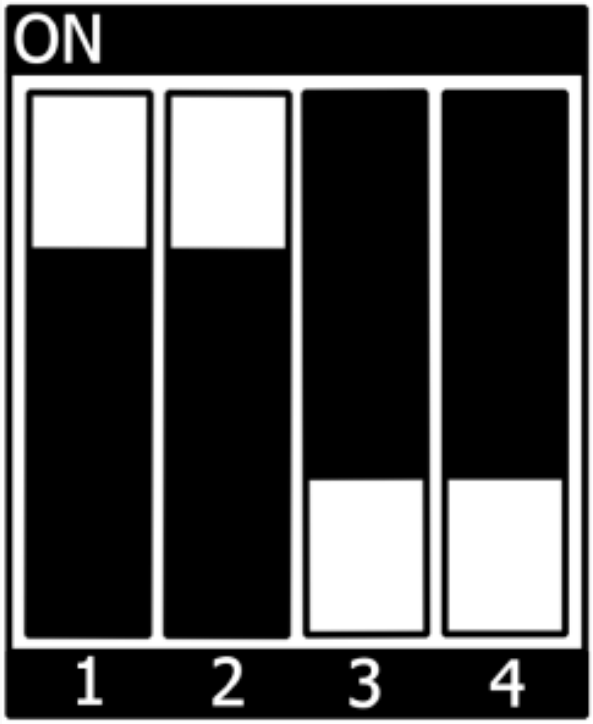

Fig. 4: SD Card

4.2 Flash eMMC

To boot from eMMC, make sure that the BSP image is flashed correctly to the eMMC and the *bootmode switch (S3)* is set to **eMMC**.

Warning

When eMMC and SD card are flashed with the same (identical) image, the UUIDs of the boot partitions are also identical. If the SD card is connected when booting, this leads to non-deterministic behavior as Linux mounts the boot partition based on UUID.

```
target:~$ blkid
```

can be run to inspect whether the current setup is affected. If mmcblk0p1 and mmcblk1p1 have an identical UUID, the setup is affected.

4.2.1 Flash eMMC from SD Card

If there is no network available, you can update the eMMC from SD card. For that, you only need a ready-to-use image file (`*.wic`) located on the SD card. Because the image file is quite large, you have to enlarge your SD card to use its full space (if it was not enlarged before). To enlarge your SD card, see Resizing ext4 Root Filesystem.

Alternatively, flash a partup package to the SD card, as described in *Getting Started*. This will ensure the full space of the SD card is used.

Flash eMMC from SD card in Linux on Target

You can flash the eMMC on Linux. You only need a partup package or WIC image saved on the SD card.

- Show your saved partup package or WIC image or WIC.XZ image files on the SD card:

```
target:~$ ls
phytec-qt6demo-image-phyboard-segin-imx93-2.rootfs.partup
phytec-qt6demo-image-phyboard-segin-imx93-2.rootfs.wic.xz
```

- Show list of available MMC devices:

```
target:~$ ls /dev | grep mmc
mmcblk1
mmcblk1p1
mmcblk1p2
mmcblk0
mmcblk0boot0
mmcblk0boot1
mmcblk0p1
mmcblk0p2
mmcblk0rpmb
```

- The eMMC device can be recognized by the fact that it contains two boot partitions: (mmcblk0**boot0**; mmcblk0**boot1**)
- Write the image to the phyCORE-i.MX 93 eMMC (/dev/mmcblk0 **without** partition) using partup:

```
target:~$ partup install phytec-qt6demo-image-phyboard-segin-imx93-2.rootfs.partup /dev/
↪mmcblk0
```

Tip

Using partup is highly recommended since it is easier to use and has the advantage of using the full capacity of the eMMC device, adjusting partitions accordingly.

Note

Alternatively, `dd` may be used instead.

For uncompressed WIC images (*.wic):

```
target:~$ dd if=phytec-qt6demo-image-phyboard-segin-imx93-2.rootfs.wic of=/dev/mmcblk0␣
↪bs=1M conv=fsync status=progress
```

For compressed WIC images (*.wic.xz):

```
target:~$ zstdcat phytec-qt6demo-image-phyboard-segin-imx93-2.rootfs.wic.xz | sudo dd␣
↪of=/dev/mmcblk0 bs=1M conv=fsync status=progress
```

Keep in mind that the root partition does not make use of the full space when flashing with `dd`.

- After a complete write, your board can boot from eMMC.

Warning

Before this will work, you need to configure the *bootmode switch (S3)* to eMMC.

4.2.2 Flash eMMC from Network

i.MX 93 boards have an Ethernet connector and can be updated over a network. Be sure to set up the development host correctly. The IP needs to be set to 192.168.3.10, the netmask to 255.255.255.0, and a TFTP server needs to be available. From a high-level point of view, an eMMC device is like an SD card. Therefore, it is possible to flash the **WIC image** (`<name>.wic`) from the Yocto build system directly to the eMMC. The image contains the bootloader, kernel, device tree, device tree overlays, and root file system.

Note

Some PHYTECs BSPs produce compressed `.wic.xz` images. In this case, the compressed image must first be uncompressed.

```
host:~$ unxz phytec-qt6demo-image-phyboard-segin-imx93-2.rootfs.wic.xz
```

Flash eMMC via Network in Linux on Target

You can update the eMMC from your target.

Tip

A working network is necessary! *Setup Network Host*

Take an uncompressed image on the host and send it with ssh through the network to the eMMC of the target with a one-line command:

```
target:~$ ssh <USER>@192.168.3.10 "dd if=<path_to_file>/phytec-qt6demo-image-phyboard-segin-
↪imx93-2.rootfs.wic" | dd of=/dev/mmcblk0 bs=1M conv=fsync status=progress
```

Flash eMMC via Network in Linux on Host

It is also possible to install the OS at eMMC from your Linux host. As before, you need a complete image on your host.

Tip

A working network is necessary! *Setup Network Host*

Show your available image files on the host:

```
host:~$ ls
phytec-qt6demo-image-phyboard-segin-imx93-2.rootfs.wic
```

Send the image with the `dd` command combined with ssh through the network to the eMMC of your device:

```
host:~$ dd if=phytec-qt6demo-image-phyboard-segin-imx93-2.rootfs.wic bs=1M status=progress | ssh␣
↪root@192.168.3.11 "dd of=/dev/mmcblk0 conv=fsync"
```

4.2.3 Flash eMMC U-Boot image via Network from running U-Boot

Update the standalone U-Boot image imx-boot is also possible from U-Boot. This can be used if the bootloader on eMMC is located in the eMMC user area.

Tip

A working network is necessary! *Setup Network Host*

Load image over tftp into RAM and then write it to eMMC:

```
u-boot=> tftp ${loadaddr} imx-boot
u-boot=> setexpr nblk ${filesize} / 0x200
u-boot=> mmc dev 0
u-boot=> mmc write ${loadaddr} 0x40 ${nblk}
```

Hint

The hexadecimal value represents the offset as a multiple of 512 byte blocks. See the *offset table* for the correct value of the corresponding SoC.

4.2.4 Flash eMMC from USB

Flash eMMC from USB in Linux

These steps will show how to flash the eMMC on Linux with a USB stick. You only need a complete image saved on the USB stick and a bootable WIC image. (e.g. phytec-qt6demo-image-phyboard-segin-imx93-2.rootfs.wic). Set the *bootmode switch (S3)* to SD Card.

- Insert and mount the USB stick:

```
[   60.458908] usb-storage 1-1.1:1.0: USB Mass Storage device detected
[   60.467286] scsi host0: usb-storage 1-1.1:1.0
[   61.504607] scsi 0:0:0:0: Direct-Access                                8.07 PQ: 0 ANSI: 2
[   61.515283] sd 0:0:0:0: [sda] 3782656 512-byte logical blocks: (1.94 GB/1.80 GiB)
[   61.523285] sd 0:0:0:0: [sda] Write Protect is off
[   61.528509] sd 0:0:0:0: [sda] No Caching mode page found
[   61.533889] sd 0:0:0:0: [sda] Assuming drive cache: write through
[   61.665969]  sda: sda1
[   61.672284] sd 0:0:0:0: [sda] Attached SCSI removable disk
target:~$ mount /dev/sda1 /mnt
```

- Now show your saved image files on the USB Stick:

```
target:~$ cd /mnt
target:~$ ls
phytec-qt6demo-image-phyboard-segin-imx93-2.rootfs.wic
```

- Show list of available MMC devices:

```
target:~$ ls /dev | grep mmc
mmcblk1
mmcblk1p1
mmcblk1p2
mmcblk0
mmcblk0boot0
mmcblk0boot1
mmcblk0p1
mmcblk0p2
mmcblk0rpmb
```

- The eMMC device can be recognized by the fact that it contains two boot partitions: (mmcblk0**boot0**; mmcblk0**boot1**)
- Write the image to the phyCORE-i.MX 93 eMMC (/dev/mmcblk0 without partition):

```
target:~$ dd if=phytec-qt6demo-image-phyboard-segin-imx93-2.rootfs.wic of=/dev/mmcblk0␣
↪bs=1M conv=fsync status=progress
```

- After a complete write, your board can boot from eMMC.

> **Tip**
>
> Before this will work, you need to configure the *bootmode switch (S3)* to **eMMC**.

4.3 RAUC

The RAUC (Robust Auto-Update Controller) mechanism support has been added to meta-ampliphy. It controls the procedure of updating a device with new firmware. This includes updating the Linux kernel, Device Tree, and root filesystem. PHYTEC has written an online manual on how we have intergraded RAUC into our BSPs: L-1006e.A5 RAUC Update & Device Management Manual.

CHAPTER

FIVE

DEVELOPMENT

5.1 Host Network Preparation

For various tasks involving a network in the Bootloader, some host services are required to be set up. On the development host, a TFTP, NFS and DHCP server must be installed and configured. The following tools will be needed to boot via Ethernet:

```
host:~$ sudo apt install tftpd-hpa nfs-kernel-server kea
```

5.1.1 TFTP Server Setup

- First, create a directory to store the TFTP files:

  ```
  host:~$ sudo mkdir /srv/tftp
  ```

- Then copy your BSP image files to this directory and make sure other users have read access to all the files in the tftp directory, otherwise they are not accessible from the target.

  ```
  host:~$ sudo chmod -R o+r /srv/tftp
  ```

- You also need to configure a static IP address for the appropriate interface. The default IP address of the PHYTEC evaluation boards is 192.168.3.11. Setting a host address 192.168.3.10 with netmask 255.255.255.0 is a good choice.

  ```
  host:~$ ip addr show <network-interface>
  ```

  Replace <network-interface> with the network interface you configured and want to connect the board to. You can show all network interfaces by not specifying a network interface.

- The message you receive should contain this:

  ```
  inet 192.168.3.10/24 brd 192.168.3.255
  ```

- Create or edit the `/etc/default/tftpd-hpa` file:

  ```
  # /etc/default/tftpd-hpa

  TFTP_USERNAME="tftp"
  TFTP_DIRECTORY="/srv/tftp"
  TFTP_ADDRESS=":69"
  TFTP_OPTIONS="-s -c"
  ```

- Set TFTP_DIRECTORY to your TFTP server root directory

- Set TFTP_ADDRESS to the host address the server is listening to (set to 0.0.0.0:69 to listen to all local IPs)
- Set TFTP_OPTIONS, the following command shows the available options:

```
host:~$ man tftpd
```

- Restart the services to pick up the configuration changes:

```
host:~$ sudo service tftpd-hpa restart
```

Now connect the ethernet port of the board to your host system. We also need a network connection between the embedded board and the TFTP server. The server should be set to IP 192.168.3.10 and netmask 255.255.255.0.

NFS Server Setup

- Create an nfs directory:

```
host:~$ sudo mkdir /srv/nfs
```

- The NFS server is not restricted to a certain file system location, so all we have to do on most distributions is modify the file `/etc/exports` and export our root file system to the embedded network. In this example file, the whole directory is exported and the "lab network" address of the development host is 192.168.3.10. The IP address has to be adapted to the local needs:

```
/srv/nfs 192.168.3.0/255.255.255.0(rw,no_root_squash,sync,no_subtree_check)
```

- Now the NFS-Server has to read the `/etc/exportfs` file again:

```
host:~$ sudo exportfs -ra
```

DHCP Server setup

- Create or edit the `/etc/kea/kea-dhcp4.conf` file; Using the internal subnet sample. Replace <network-interface> with the name for the physical network interface:

```
{
  "Dhcp4": {
    "interfaces-config": {
      "interfaces": [ "<network-interface>/192.168.3.10" ]
    },
    "lease-database": {
      "type": "memfile",
      "persist": true,
      "name": "/tmp/dhcp4.leases"
    },
    "valid-lifetime": 28800,
    "subnet4": [{
        "id": 1,
        "next-server": "192.168.3.10",
        "subnet": "192.168.3.0/24",
        "pools": [
          { "pool": "192.168.3.1 - 192.168.3.255" }
        ]
```

(continues on next page)

(continued from previous page)

```
    }]
  }
}
```

Warning

Be careful when creating subnets as this may interfere with the company network policy. To be on the safe side, use a different network and specify that via the `interfaces` configuration option.

- Now the DHCP-Server has to read the `/etc/kea/kea-dhcp4.conf` file again:

```
host:~$ sudo systemctl restart kea-dhcp4-server
```

When you boot/restart your host PC and don't have the network interface, as specified in the kea-dhcp4 config, already active the kea-dhcp4-server will fail to start. Make sure to start/restart the systemd service when you connect the interface.

Note

DHCP server setup is only needed when using dynamic IP addresses. For our vendor BSPs, static IP addresses are used by default.

```
u-boot=> env print ip_dyn
ip_dyn=no
```

To use dynamic IP addresses for netboot, `ip_dyn` needs to be set to `yes`.

5.2 Booting the Kernel from a Network

Booting from a network means loading the kernel and device tree over TFTP and the root file system over NFS. The bootloader itself must already be loaded from another available boot device.

5.2.1 Place Images on Host for Netboot

- Copy the kernel image to your tftp directory:

```
host:~$ cp Image /srv/tftp
```

- Copy the devicetree to your tftp directory:

```
host:~$ cp oftree /srv/tftp
```

- Copy all the overlays you want to use into your tftp directory:

```
host:~$ cp *.dtbo /srv/tftp
```

- Make sure other users have read access to all the files in the tftp directory, otherwise they are not accessible from the target:

```
host:~$ sudo chmod -R o+r /srv/tftp
```

- Extract the rootfs to your nfs directory:

```
host:~$ sudo tar -xvzf phytec-qt6demo-image-phyboard-segin-imx93-2.tar.gz -C /srv/nfs
```

Note

Make sure you extract with sudo to preserve the correct ownership.

5.2.2 Set the bootenv.txt for Netboot

Create a bootenv.txt file in your tftp directory and write the following variables into it.

```
bootfile=Image
fdt_file=oftree
nfsroot=/srv/nfs
overlays=<overlayfilenames>
```

<overlayfilenames> has to be replaced with the devicetree overlay filenames that you want to use. Separate the filenames by spaces. For example:

```
overlays=example-overlay1.dtbo example-overlay2.dtbo
```

Tip

All supported devicetree overlays are in the *device tree* chapter.

5.2.3 Network Settings on Target

To customize the targets ethernet configuration, please follow the description here: *Network Environment Customization*

5.2.4 Booting from an Embedded Board

Boot the board into the U-boot prompt and press any key to hold.

- To boot from a network, call:

  ```
  u-boot=> run netboot
  ```

5.3 Working with UUU-Tool

The Universal Update Utility Tool (UUU-Tool) from NXP is a software to execute on the host to load and run the bootloader on the board through SDP (Serial Download Protocol). For detailed information visit https://github.com/nxp-imx/mfgtools or download the Official UUU-tool documentation.

5.3.1 Host preparations for UUU-Tool Usage

- Follow the instructions from https://github.com/nxp-imx/mfgtools#linux.
- If you built UUU from source, add it to `PATH`:

  This BASH command adds UUU only temporarily to `PATH`. To add it permanently, add this line to `~/.bashrc`.

```
export PATH=~/mfgtools/uuu/:"$PATH"
```

- Set udev rules (documented in `uuu -udev`):

```
host:~$ sudo sh -c "uuu -udev >> /etc/udev/rules.d/70-uuu.rules"
host:~$ sudo udevadm control --reload
```

5.3.2 Get Images

Download imx-boot from our server or get it from your Yocto build directory at build/deploy/images/phyboard-segin-imx93-2/. For flashing a wic image to eMMC, you will also need phytec-qt6demo-image-phyboard-segin-imx93-2.wic.

5.3.3 Prepare Target

Set the *bootmode switch (S3)* to **USB Serial Download**. Also, connect USB port *X8 (USB micro/OTG connector)* to your host.

5.3.4 Starting bootloader via UUU-Tool

Execute and power up the board:

```
host:~$ sudo uuu -b spl imx-boot
```

You can see the bootlog on the console via UART1 console on PEB-EVAL-01 for **phyBOARD-Segin** and X-37 USB-C debug for **phyBOARD-Nash**, as usual.

Note

The default boot command when booting with UUU-Tool is set to fastboot. If you want to change this, please adjust the environment variable bootcmd_mfg in U-boot prompt with setenv bootcmd_mfg. Please note, when booting with UUU-tool the default environment is loaded. Saveenv has no effect. If you want to change the boot command permanently for UUU-boot, you need to change this in U-Boot code.

5.3.5 Flashing U-boot Image to eMMC via UUU-Tool

Warning

UUU flashes U-boot into eMMC BOOT (hardware) boot partitions, and it sets the BOOT_PARTITION_ENABLE in the eMMC! This is a problem since we want the bootloader to reside in the eMMC USER partition. Flashing next U-Boot version .wic image and not disabling BOOT_PARTITION_ENABLE bit will result in device always using U-boot saved in BOOT partitions. To fix this in U-Boot:

```
u-boot=> mmc partconf 0 0 0 0
u-boot=> mmc partconf 0
EXT_CSD[179], PARTITION_CONFIG:
BOOT_ACK: 0x0
BOOT_PARTITION_ENABLE: 0x0
PARTITION_ACCESS: 0x0
```

or check Disable booting from eMMC boot partitions from Linux.

This way the bootloader is still flashed to eMMC BOOT partitions but it is not used!

When using **partup** tool and `.partup` package for eMMC flashing this is done by default, which makes partup again superior flash option.

Execute and power up the board:

```
host:~$ sudo uuu -b emmc imx-boot
```

5.3.6 Flashing wic Image to eMMC via UUU-Tool

Execute and power up the board:

```
host:~$ sudo uuu -b emmc_all imx-boot phytec-qt6demo-image-phyboard-segin-imx93-2.wic
```

5.4 Standalone Build preparation

In this section, we describe how to build the U-Boot and the Linux kernel without using the Yocto Project. This procedure makes the most sense for development. The U-Boot source code, the Linux kernel, and all other git repositories are available on GitHub 'Git server at https://github.com/phytec.

5.4.1 Git Repositories

- Used U-Boot repository:

  ```
  git://git.phytec.de/u-boot-imx
  ```

- Our U-Boot is based on the u-boot-imx and adds board-specific patches.
- Used Linux kernel repository:

  ```
  git://github.com/phytec/linux-phytec-imx.git
  ```

- Our i.MX 93 kernel is based on the linux-phytec-imx kernel.

To find out which u-boot and kernel tags to use for a specific board, have a look at your BSP source folder:

```
meta-phytec/recipes-kernel/linux/linux-phytec-imx_*.bb
meta-phytec/recipes-bsp/u-boot/u-boot-imx_*.bb
```

5.4.2 Get the SDK

You can download the SDK here, or build it yourself with Yocto:

- Move to the Yocto build directory:

  ```
  host:~$ source sources/poky/oe-init-build-env
  host:~$ bitbake -c populate_sdk phytec-qt6demo-image # or another image
  ```

After a successful build the SDK installer is deployed to `build/deploy*/sdk`.

5.4.3 Install the SDK

- Set correct permissions and install the SDK:

```
host:~$ chmod +x phytec-ampliphy-vendor-wayland-glibc-x86_64-phytec-qt6demo-image-cortexa55-
↪toolchain-5.0.sh
host:~$ ./phytec-ampliphy-vendor-wayland-glibc-x86_64-phytec-qt6demo-image-cortexa55-
↪toolchain-5.0.sh
==========================================================================================
Enter target directory for SDK (default: /opt/ampliphy-vendor-wayland/5.0):
You are about to install the SDK to "/opt/ampliphy-vendor-wayland/5.0". Proceed [Y/n]? Y
Extracting SDK...done
Setting it up...done
SDK has been successfully set up and is ready to be used.
```

5.4.4 Using the SDK

Activate the toolchain for your shell by sourcing the *environment-setup* file in the toolchain directory:

```
host:~$ source /opt/ampliphy-vendor-wayland/5.0/environment-setup-cortexa55-phytec-linux
```

5.4.5 Installing Required Tools

Building Linux and U-Boot out-of-tree requires some additional host tool dependencies to be installed. For Ubuntu you can install them with:

```
host:~$ sudo apt install bison flex libssl-dev
```

Warning

Using the SDK on older host distributions (e.g., Ubuntu 20.04 LTS) with Scarthgap NXP-based BSPs can cause issues when building U-Boot or Linux kernel tools for host use. If you encounter an "undefined reference" error, a workaround is to prepend the host's binutils to the PATH.

```
host$ export PATH=/usr/bin:$PATH
```

Run this after sourcing the SDK *environment-setup* file.

Note, SDK issue has not been observed on newer distributions, such as Ubuntu 22.04, which appear to work without requiring any modifications.

5.5 U-Boot standalone build

5.5.1 Get the source code

- Get the U-Boot sources:

```
host:~$ git clone git://git.phytec.de/u-boot-imx
```

- To get the correct *U-Boot* **tag** you need to take a look at our release notes, which can be found here: release notes
- The **tag** needed at this release is called v2024.04-2.0.0-phy6
- Check out the needed *U-Boot* **tag**:

```
host:~$ cd ~/u-boot-imx/
host:~/u-boot-imx$ git fetch --all --tags
host:~/u-boot-imx$ git checkout tags/v2024.04-2.0.0-phy6
```

- Technically, you can now build the U-Boot, but practically there are some further steps necessary:
  - Create your own development branch:

```
host:~/u-boot-imx$ git switch --create <new-branch>
```

> **Note**
>
> You can name your development branch as you like, this is just an example.

- Set up a build environment:

```
host:~/u-boot-imx$ source /opt/ampliphy-vendor-wayland/5.0/environment-setup-cortexa55-
↪phytec-linux
```

5.5.2 Get the needed binaries

To build the imx-boot, you need to **gather** these **files** for later use with **imx-mkimage tool**:

- **ARM Trusted firmware binary** (*mkimage tool* compatible format **bl31.bin**): bl31-imx93.bin
- **OPTEE image** (optional): tee.bin
- **DDR firmware files** (*mkimage tool* compatible format **lpddr4_[i,d]mem_*d_*.bin**): lpddr4_dmem_1d_*.bin, lpddr4_dmem_2d_*.bin, lpddr4_imem_1d_*.bin, lpddr4_imem_2d_*.bin
- **Container image**: mx93a1-ahab-container.img

If you already built our BSP with Yocto, you can get these files from the directory mentioned here: *BSP Images*

Or you can download the files from the PHYTEC download server (https://download.phytec.de/Software/Linux/BSP-Yocto-i.MX93/BSP-Yocto-NXP-i.MX93-PD24.2.0/images/ampliphy-vendor-wayland/phyboard-segin-imx93-2/imx-boot-tools/). You can use the commands below to download all the files from that server:

```
host:~$ mkdir ./artefacts && cd ./artefacts
host:~/artefacts$ wget \
                    https://download.phytec.de/Software/Linux/BSP-Yocto-i.MX93/BSP-Yocto-NXP-i.
↪MX93-PD24.2.0/images/ampliphy-vendor-wayland/phyboard-segin-imx93-2/imx-boot-tools//bl31-imx93.
↪bin \
                    https://download.phytec.de/Software/Linux/BSP-Yocto-i.MX93/BSP-Yocto-NXP-i.
↪MX93-PD24.2.0/images/ampliphy-vendor-wayland/phyboard-segin-imx93-2/imx-boot-tools//tee.bin \
                    https://download.phytec.de/Software/Linux/BSP-Yocto-i.MX93/BSP-Yocto-NXP-i.
↪MX93-PD24.2.0/images/ampliphy-vendor-wayland/phyboard-segin-imx93-2/imx-boot-tools//lpddr4_
↪dmem_1d_v202201.bin \
                    https://download.phytec.de/Software/Linux/BSP-Yocto-i.MX93/BSP-Yocto-NXP-i.
↪MX93-PD24.2.0/images/ampliphy-vendor-wayland/phyboard-segin-imx93-2/imx-boot-tools//lpddr4_
↪dmem_2d_v202201.bin \
                    https://download.phytec.de/Software/Linux/BSP-Yocto-i.MX93/BSP-Yocto-NXP-i.
```

(continues on next page)

(continued from previous page)

```
↪MX93-PD24.2.0/images/ampliphy-vendor-wayland/phyboard-segin-imx93-2/imx-boot-tools//lpddr4_
↪imem_1d_v202201.bin \
                    https://download.phytec.de/Software/Linux/BSP-Yocto-i.MX93/BSP-Yocto-NXP-i.
↪MX93-PD24.2.0/images/ampliphy-vendor-wayland/phyboard-segin-imx93-2/imx-boot-tools//lpddr4_
↪imem_2d_v202201.bin \
                    https://download.phytec.de/Software/Linux/BSP-Yocto-i.MX93/BSP-Yocto-NXP-i.
↪MX93-PD24.2.0/images/ampliphy-vendor-wayland/phyboard-segin-imx93-2/imx-boot-tools//mx93a1-
↪ahab-container.img
host:~/artefacts$ cd ..
```

5.5.3 Build the bootloader

- Build u-boot:

```
host:~/u-boot-imx$ make <defconfig>
host:~/u-boot-imx$ make
host:~/u-boot-imx$ cd ..
```

> **Note**
>
> In command above replace `<defconfig>` with `imx93-phycore_defconfig`

Build final flash.bin with imx-mkimage

- Get imx-mkimage:

```
host:~$ git clone https://github.com/nxp-imx/imx-mkimage
host:~$ cd imx-mkimage/
host:~/imx-mkimage$ git checkout tags/lf-6.6.23-2.0.0
```

- Copy firmware binaries into imx-mkimage

```
host:~/imx-mkimage$ cp ../artefacts/bl31-imx93.bin ./iMX9/bl31.bin
host:~/imx-mkimage$ cp \
                    ../artefacts/lpddr4_* \
                    ../artefacts/mx93a1-ahab-container.img \
                    ../artefacts/tee.bin \
                    ./iMX9/
```

- Copy u-boot binaries and DTB into imx-mkimage

```
host:~/imx-mkimage$ cp ../u-boot-imx/spl/u-boot-spl.bin ../u-boot-imx/u-boot.bin ./iMX9/
host:~/imx-mkimage$ cp ../u-boot-imx/arch/arm/dts/<dtb> ./iMX9/
```

> **Note**
>
> In command above replace `<dtb>` with `imx93-phyboard-segin.dtb`

- Build final flash.bin binary

```
host:~/imx-mkimage$ make SOC=iMX9 REV=A1 flash_singleboot
```

5.5.4 Flash the bootloader to a block device

The flash.bin can be found at imx-mkimage/iMX9/ directory and now can be flashed. A chip-specific offset is needed:

SoC	Offset User Area	Offset Boot Partition	eMMC Device
i.MX 93	32 kiB	0 kiB	/dev/mmcblk0

E.g. flash SD card:

```
host:~/imx-mkimage$ sudo dd if=./iMX9/flash.bin of=<sd-card> bs=1024 seek=32 conv=fsync
```

Note

In the command above, replace `<sd-card>` with your sd-card device name. For more information on how to find the device name, see the section Finding the Correct Device in Getting Started.

Hint

The specific offset values are also declared in the Yocto variables "BOOTLOADER_SEEK" and "BOOTLOADER_SEEK_EMMC"

5.6 Kernel standalone build

5.6.1 Setup sources

- The used linux-phytec-imx branch can be found in the release notes
- The tag needed for this release is called v6.6.23-2.0.0-phy8
- Check out the needed linux-phytec-imx tag:

```
host:~$ git clone git://github.com/phytec/linux-phytec-imx.git
host:~$ cd ~/linux-phytec-imx/
host:~/linux-phytec-imx$ git fetch --all --tags
host:~/linux-phytec-imx$ git checkout tags/v6.6.23-2.0.0-phy8
```

- For committing changes, it is highly recommended to switch to a new branch:

```
host:~/linux-phytec-imx$ git switch --create <new-branch>
```

- Set up a build environment:

```
host:~/linux-phytec-imx$ source /opt/ampliphy-vendor-wayland/5.0/environment-setup-
↪cortexa55-phytec-linux
```

5.6.2 Build the kernel

- Build the linux kernel:

```
host:~/linux-phytec-imx$ make imx9_phytec_defconfig
host:~/linux-phytec-imx$ make -j$(nproc)
```

- Install kernel modules to e.g. NFS directory:

```
host:~/linux-phytec-imx$ make INSTALL_MOD_PATH=/home/<user>/<rootfspath> modules_install
```

- The Image can be found at ~/linux-phytec-imx/arch/arm64/boot/Image
- The dtb can be found at ~/linux-phytec-imx/arch/arm64/boot/dts/freescale/imx93-phyboard-segin.dtb
- For (re-)building only Devicetrees and -overlays, it is sufficient to run

```
host:~/linux-phytec-imx$ make dtbs
```

Note

If you are facing the following build issue:

```
scripts/dtc/yamltree.c:9:10: fatal error: yaml.h: No such file or directory
```

Make sure you installed the package *"libyaml-dev"* on your host system:

```
host:~$ sudo apt install libyaml-dev
```

5.6.3 Copy Kernel to SD Card

When one-time boot via netboot is not sufficient, the kernel along with its modules and the corresponding device tree blob may be copied directly to a mounted SD card.

```
host:~/linux-phytec-imx$ cp arch/arm64/boot/Image /path/to/sdcard/boot/
host:~/linux-phytec-imx$ cp arch/arm64/boot/dts/freescale/imx93-phyboard-segin.dtb /path/to/
↪sdcard/boot/oftree
host:~/linux-phytec-imx$ make INSTALL_MOD_PATH=/path/to/sdcard/root/ modules_install
```

5.7 Format SD card

Most images are larger than the default root partition. To flash any storage device with SD Card, the rootfs needs to be expanded or a separate partition needs to be created. There are some different ways to format the SD Card. The easiest way to do this is to use the UI program Gparted.

5.7.1 Gparted

- Get GParted:

```
host:~$ sudo apt install gparted
```

- Insert the SD card into your host and get the device name:

```
host:~$ dmesg | tail
...
[30436.175412] sd 4:0:0:0: [sdb] 62453760 512-byte logical blocks: (32.0 GB/29.8 GiB)
[30436.179846]  sdb: sdb1 sdb2
...
```

- Unmount all SD card partitions.
- Launch GParted:

```
host:~$ sudo gparted
```

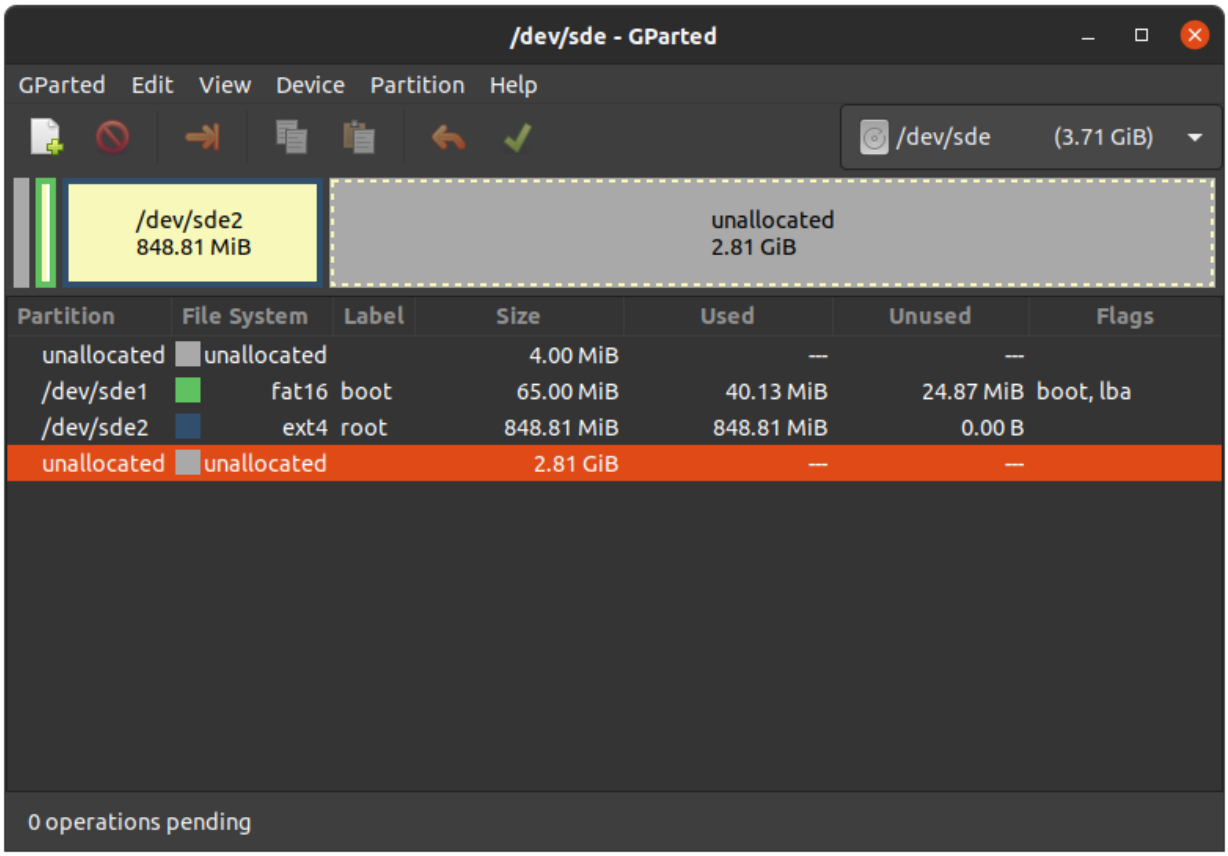

Expand rootfs

Warning

Running gparted on host systems which are using resize2fs version 1.46.6 and older (e.g. Ubuntu 22.04) are not able to expand the ext4 partition created with Yocto Mickledore and newer. This is due to a new default option in resize2fs which causes a incompatibility. See release notes.

- Choose your SD card device at the drop-down menu on the top right
- Choose the ext4 root partition and click on resize:

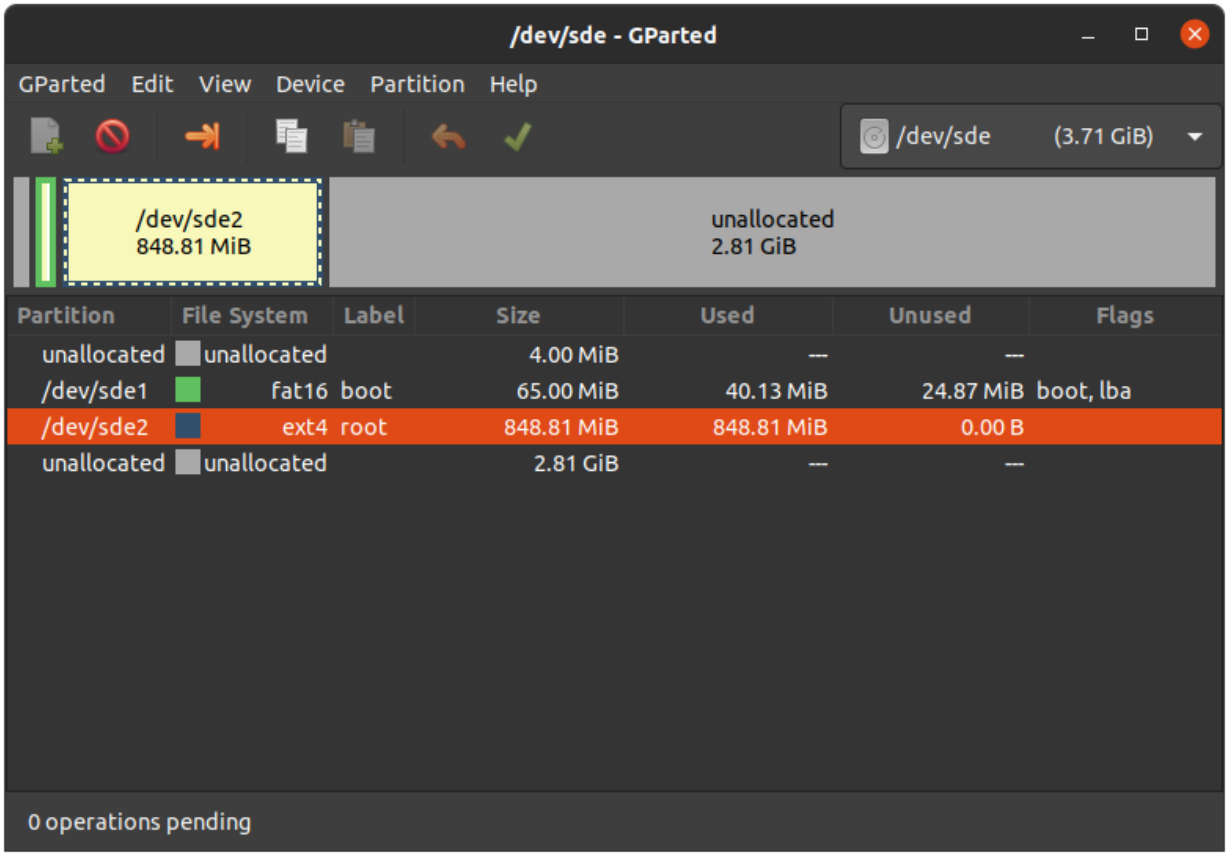

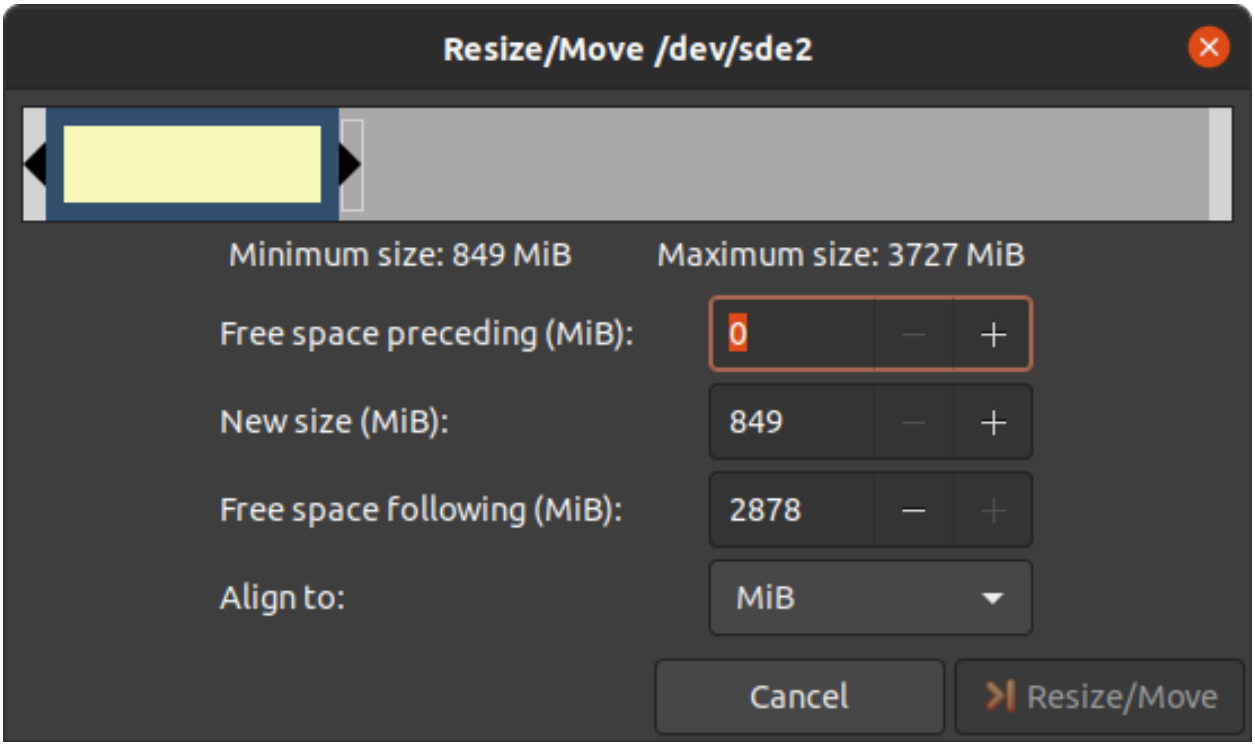

- Drag the slider as far as you like or enter the size manually.

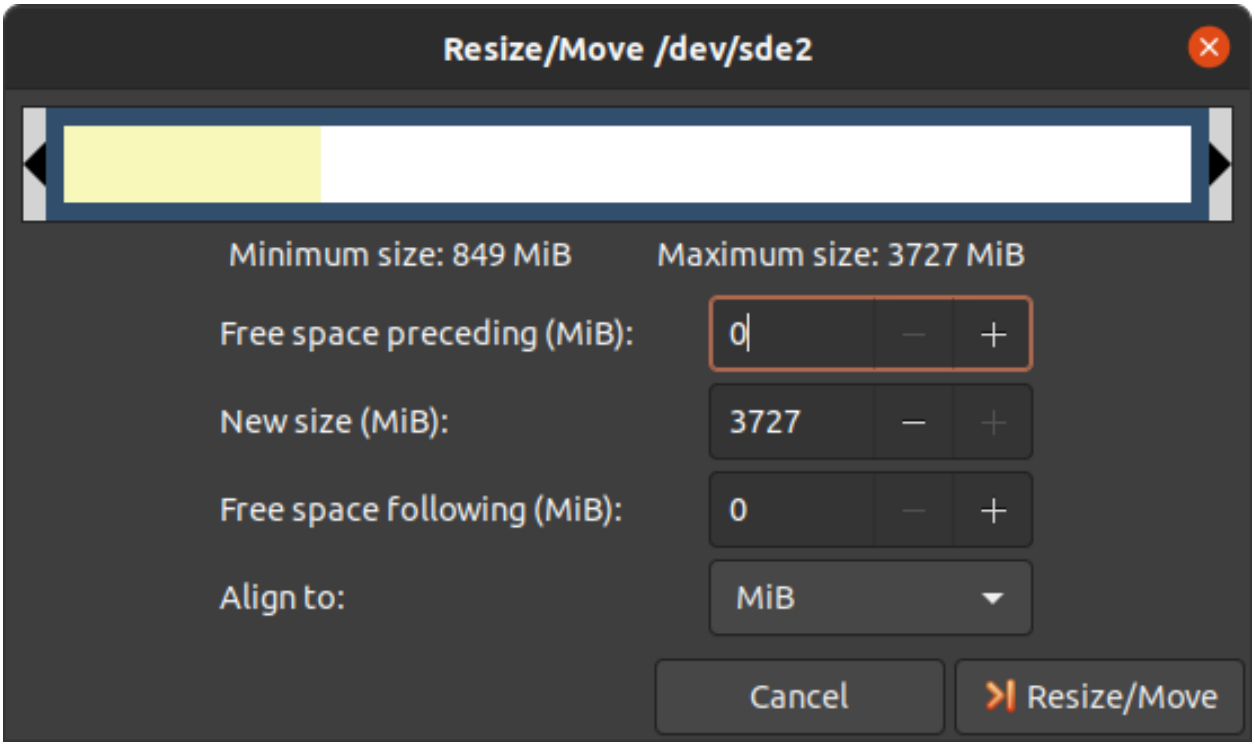

- Confirm your entry by clicking on the "Change size" button.

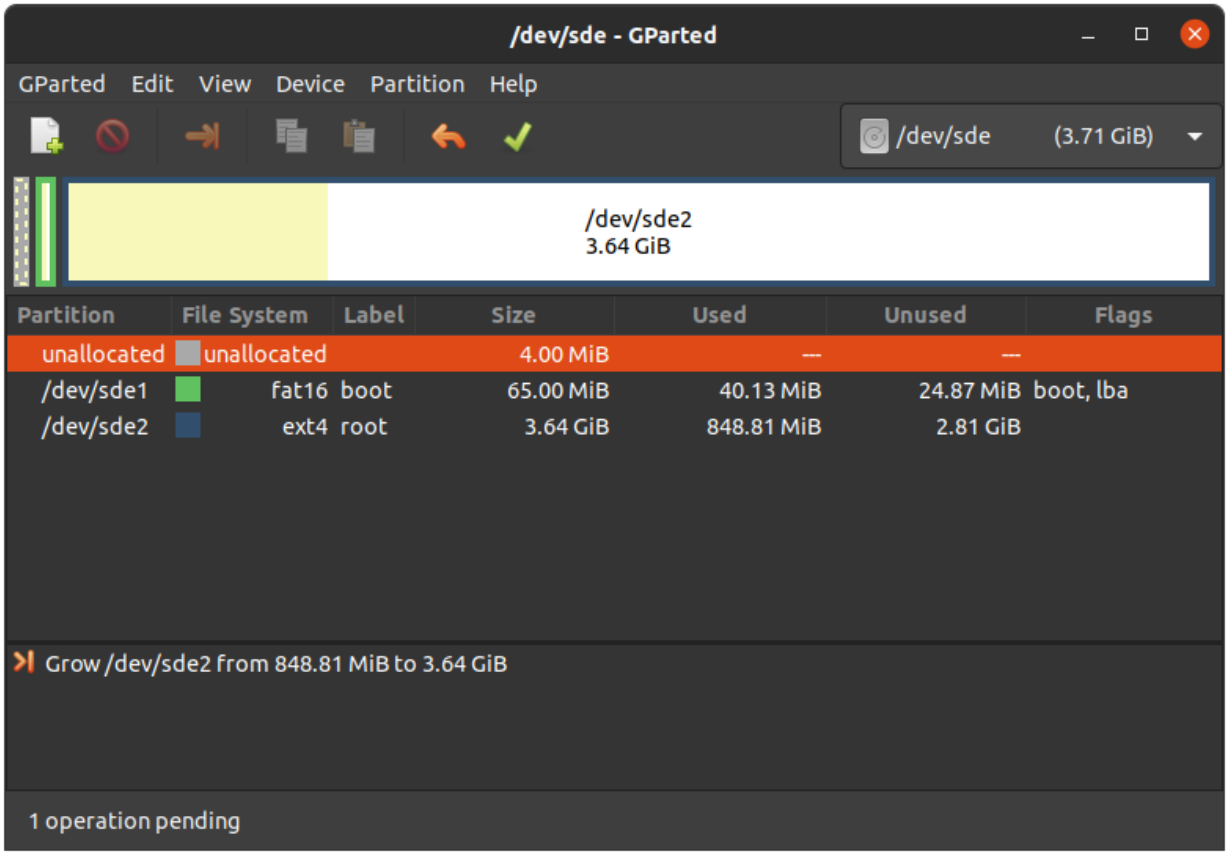

- To apply your changes, press the green tick.

- Now you can mount the root partition and copy e.g. the phytec-qt6demo-image-phyboard-segin-imx93-2.wic image to it. Then unmount it again:

```
host:~$ sudo cp phytec-qt6demo-image-phyboard-segin-imx93-2.wic /mnt/ ; sync
host:~$ umount /mnt
```

Create the Third Partition

- Choose your SD card device at the drop-down menu on the top right

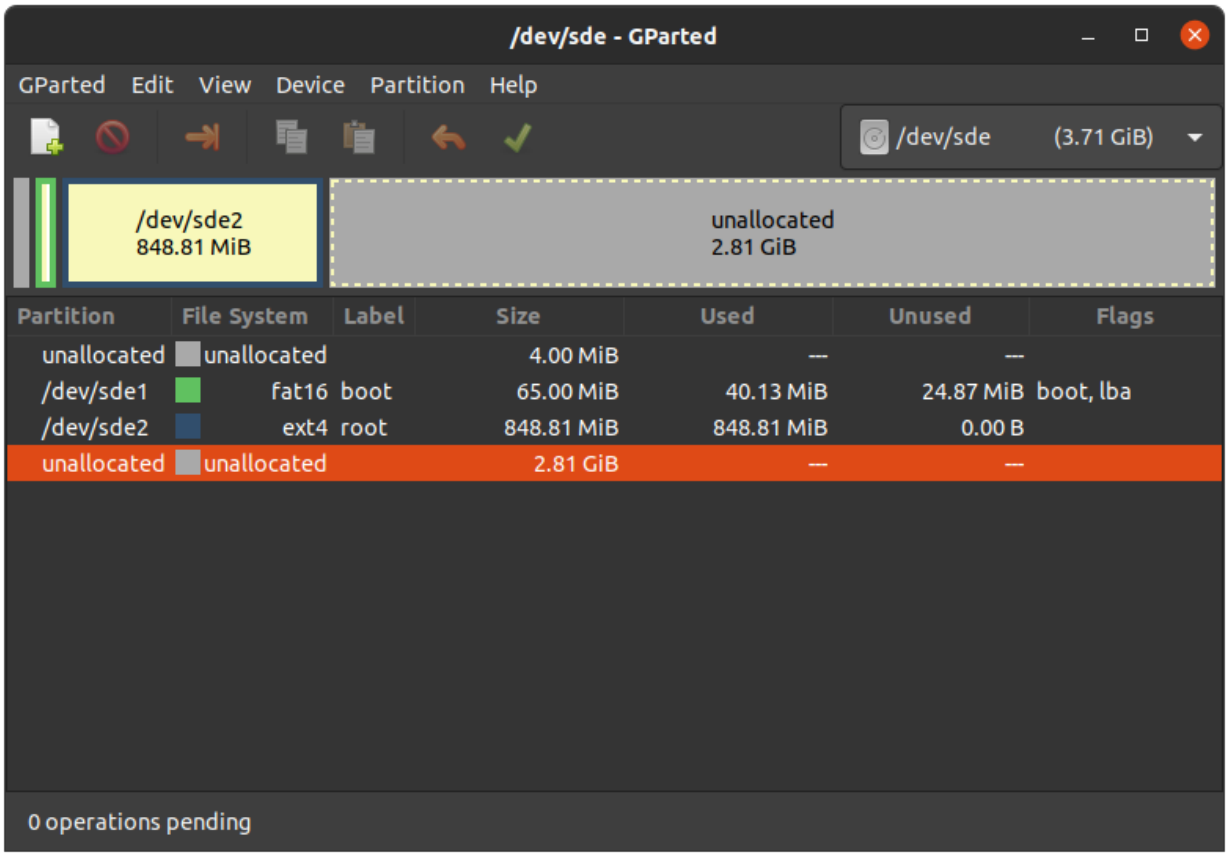

- Choose the bigger unallocated area and press “New”:

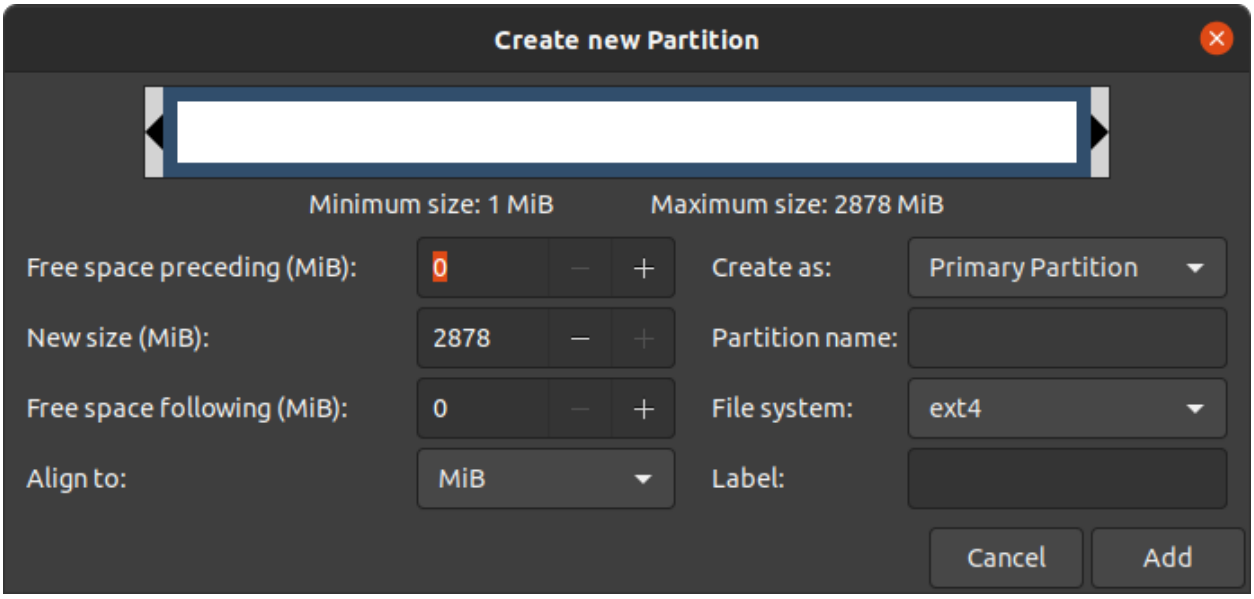

- Click "Add"

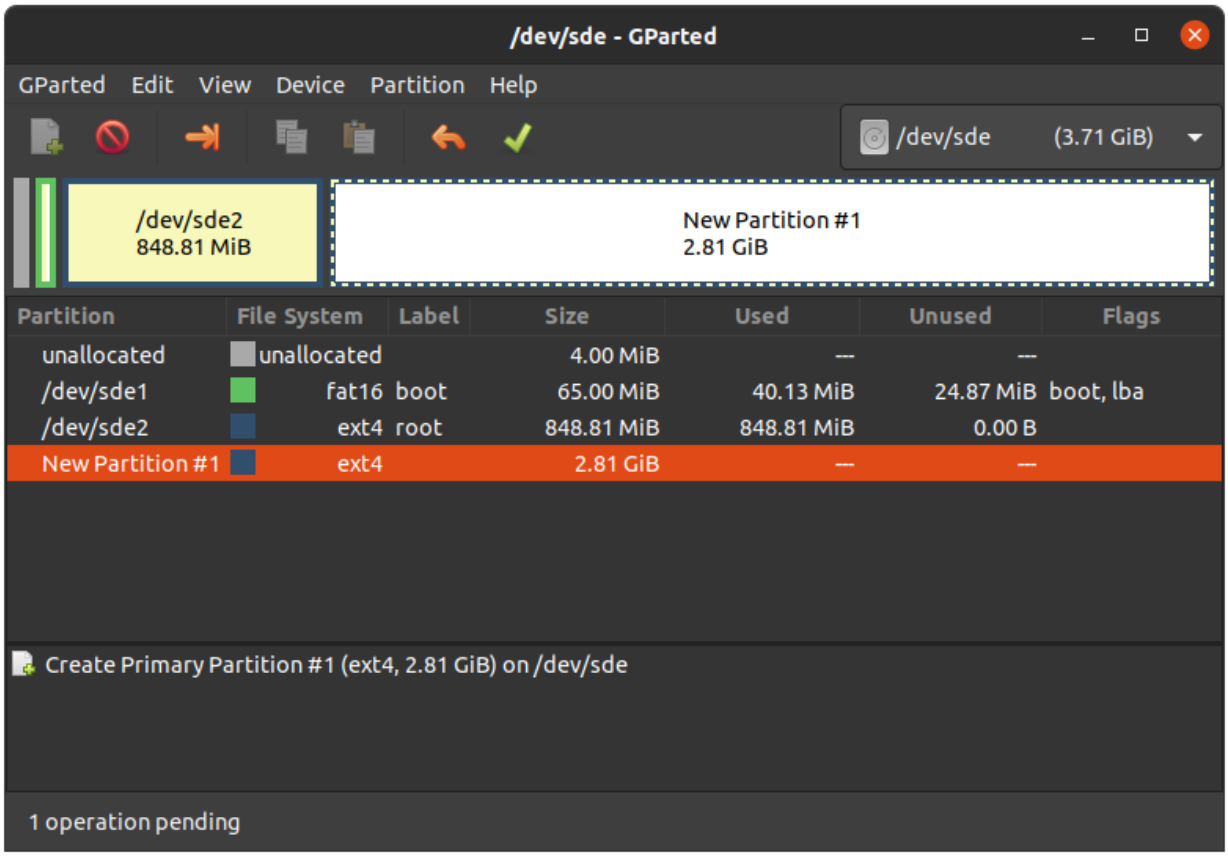

- Confirm your changes by pressing the green tick.

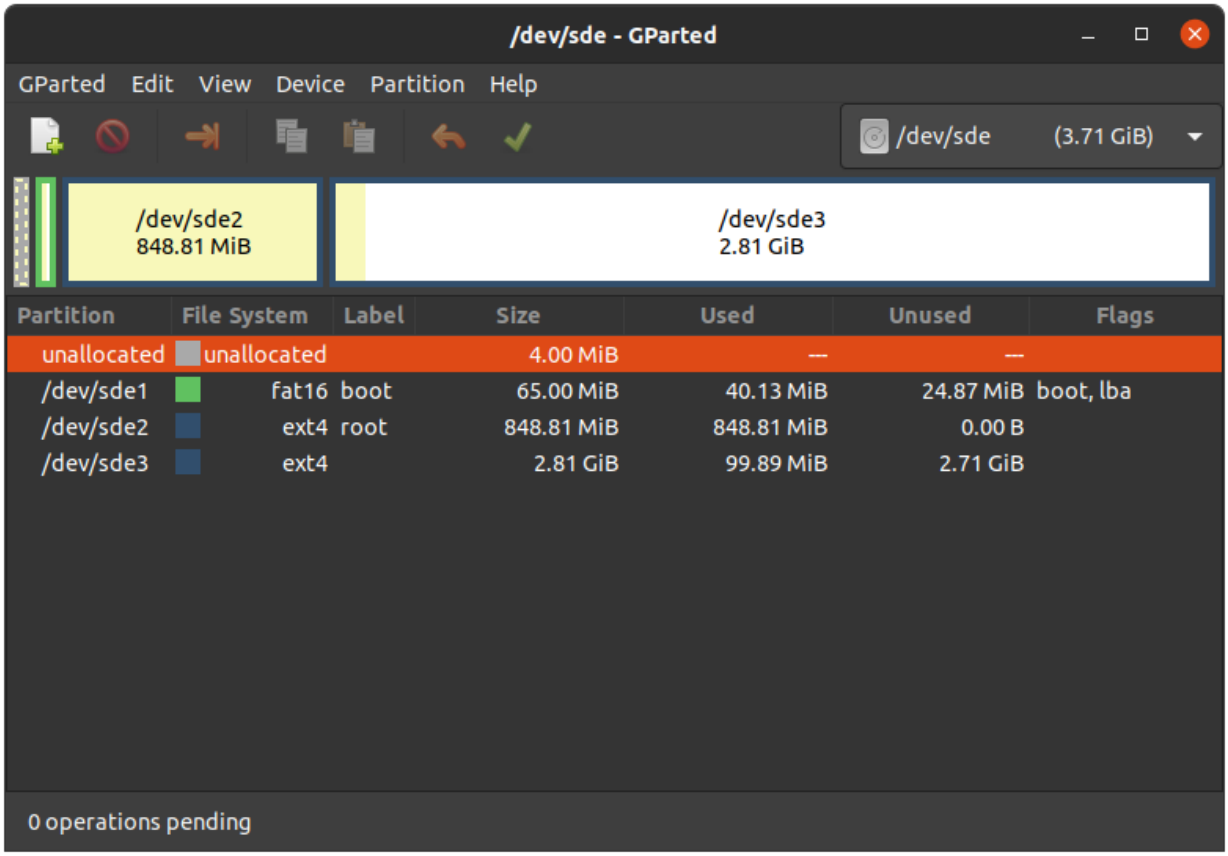

- Now you can mount the new partition and copy e.g. phytec-qt6demo-image-phyboard-segin-imx93-2.wic image to it. Then unmount it again:

```
host:~$ sudo mount /dev/sde3 /mnt
host:~$ sudo cp phytec-qt6demo-image-phyboard-segin-imx93-2.wic /mnt/ ; sync
host:~$ umount /mnt
```

5.8 Enabling JTAG Debug Interface on phyBOARD Nash

The i.MX 93 has a JTAG debug interface which can be used to debug software running on the SoC. The JTAG interface is routed through the pinmux and is not enabled by default. To enable the JTAG interface, please add this overlay to your `bootenv.txt` file:

```
imx93-phyboard-nash-jtag.dtbo
```

Note

JTAG and the MIPI CSI interface cannot be used at the same time, since they share the same pins. Jumper `JP15` switches signals between JTAG and MIPI CSI. It needs to be set to use JTAG.

CHAPTER

SIX

DEVICE TREE (DT)

6.1 Introduction

The following text briefly describes the Device Tree and can be found in the Linux kernel Documentation (https://docs.kernel.org/devicetree/usage-model.html)

"The "Open Firmware Device Tree", or simply Devicetree (DT), is a data structure and language for describing hardware. More specifically, it is a description of hardware that is readable by an operating system so that the operating system doesn't need to hard code details of the machine."

The kernel documentation is a really good source for a DT introduction. An overview of the device tree data format can be found on the device tree usage page at devicetree.org.

6.2 PHYTEC i.MX 93 BSP Device Tree Concept

The following sections explain some rules PHYTEC has defined on how to set up device trees for our i.MX 93 SoC-based boards.

6.2.1 Device Tree Structure

- *Module.dtsi* - Module includes all devices mounted on the SoM, such as PMIC and RAM.
- *Board.dts* - include the module dtsi file. Devices that come from the i.MX 93 SoC but are just routed down to the carrier board and used there are included in this dts.
- *Overlay.dtso* - enable/disable features depending on optional hardware that may be mounted or missing on SoM or baseboard (e.g SPI flash or PEB-AV-10)

From the root directory of the Linux Kernel our devicetree files for i.MX 9 platforms can be found in `arch/arm64/boot/dts/freescale/`.

6.2.2 Device Tree Overlay

Device Tree overlays are device tree fragments that can be merged into a device tree during boot time. These are for example hardware descriptions of an expansion board. They are instead of being added to the device tree as an extra include, now applied as an overlay. They also may only contain setting the status of a node depending on if it is mounted or not. The device tree overlays are placed next to the other device tree files in our Linux kernel repository in the folder `arch/arm64/boot/dts/freescale/`.

Available overlays for phyboard-segin-imx93-2.conf are:

```
imx93-phyboard-segin-peb-av-02.dtbo
imx93-phyboard-segin-peb-eval-01.dtbo
```

(continues on next page)

(continued from previous page)

```
imx93-phyboard-segin-peb-wlbt-05.dtbo
imx93-phycore-rpmsg.dtbo
imx93-phycore-no-emmc.dtbo
imx93-phycore-no-eth.dtbo
```

Available overlays for phyboard-nash-imx93-1.conf are:

```
imx93-phyboard-nash-jtag.dtbo
imx93-phyboard-nash-peb-av-10.dtbo
imx93-phyboard-nash-pwm-fan.dtbo
imx93-phyboard-nash-vm016.dtbo
imx93-phycore-rpmsg.dtbo
imx93-phycore-no-emmc.dtbo
imx93-phycore-no-eth.dtbo
```

The usage of overlays can be configured during runtime in Linux or U-Boot. Overlays are applied during the boot process in the bootloader after the boot command is called and before the kernel is loaded. The next sections explain the configuration in more detail.

Set `${overlays}` variable

The `${overlays}` U-Boot environment variable contains a space-separated list of overlays that will be applied during boot. Depending on the boot source the overlays have to either be placed in the boot partition of eMMC/SD-Card or are loaded over tftp. Overlays set in the $KERNEL_DEVICETREE Yocto machine variable will be automatically added to the boot partition of the final WIC image.

The `${overlays}` variable can be either set directly in the U-Boot environment or can be part of the external `bootenv.txt` environment file. By default, the `${overlays}` variable comes from the external `bootenv.txt` environment file which is located in the boot partition. You can read and write the file on booted target from linux:

```
target:~$ cat /boot/bootenv.txt
overlays=imx93-phyboard-segin-peb-eval-01.dtbo imx93-phyboard-segin-peb-av-02.dtbo
```

Note

Make sure the boot partition is mounted! If it is not you can mount it with:

```
target:~$ mount /dev/mmcblkXp0 /boot
```

Changes will take effect after the next reboot. If no `bootenv.txt` file is available the overlays variable can be set directly in the U-Boot environment.

```
u-boot=> setenv overlays imx93-phyboard-segin-peb-av-02.dtbo
u-boot=> printenv overlays
overlays=imx93-phyboard-segin-peb-av-02.dtbo
u-boot=> boot
```

If a user defined `${overlays}` variable should be directly loaded from U-Boot environment but there is still an external `bootenv.txt` available, the `${no_bootenv}` variable needs to be set as a flag:

```
u-boot=> setenv no_bootenv 1
u-boot=> setenv overlays imx93-phyboard-segin-peb-av-02.dtbo
u-boot=> boot
```

More information about the external environment can be found in U-boot External Environment subsection of the *device tree overlay section*.

We use the `${overlays}` variable for overlays describing expansion boards that can not be detected during run time. To prevent applying overlays listed in the `${overlays}` variable during boot, the `${no_overlays}` variable can be set to *1* in the bootloader environment.

```
u-boot=> setenv no_overlays 1
u-boot=> boot
```

6.2.3 U-boot External Environment

During the start of the Linux Kernel the external environment `bootenv.txt` text file will be loaded from the boot partition of an MMC device or via TFTP. The main intention of this file is to store the `${overlays}` variable. This makes it easy to pre-define the overlays in Yocto depending on the used machine. The content from the file is defined in the Yocto recipe bootenv found in meta-phytec: https://git.phytec.de/meta-phytec/tree/recipes-bsp/bootenv?h=scarthgap

Other variables can be set in this file, too. They will overwrite the existing settings in the environment. But only variables evaluated after issuing the boot command can be overwritten, such as `${nfsroot}` or `${mmcargs}`. Changing other variables in that file will not have an effect. See the usage during netboot as an example.

If the external environment can not be loaded the boot process will be anyway continued with the values of the existing environment settings.

6.2.4 Change U-boot Environment from Linux on Target

Libubootenv is a tool included in our images to modify the U-Boot environment of Linux on the target machine.

Print the U-Boot environment using the following command:

```
target:~$ fw_printenv
```

Modify a U-Boot environment variable using the following command:

```
target:~$ fw_setenv <variable> <value>
```

Caution

Libubootenv takes the environment selected in a configuration file. The environment to use is inserted there, and by default it is configured to use the eMMC environment (known as the default used environment).

If the eMMC is not flashed or the eMMC environment is deleted, libubootenv will not work. You should modify the `/etc/fw_env.config` file to match the environment source that you want to use.

CHAPTER

SEVEN

ACCESSING PERIPHERALS

To find out which boards and modules are supported by the release of PHYTEC's phyCORE-i.MX 93 BSP described herein, visit our BSP web page and click the corresponding BSP release in the download section. Here you can find all hardware supported in the columns "Hardware Article Number" and the correct machine name in the corresponding cell under "Machine Name".

To achieve maximum software reuse, the Linux kernel offers a sophisticated infrastructure that layers software components into board-specific parts. The BSP tries to modularize the kit features as much as possible. When a customized baseboard or even a customer-specific module is developed, most of the software support can be reused without error-prone copy-and-paste. The kernel code corresponding to the boards can be found in device trees (DT) in the kernel repository under `arch/arm64/boot/dts/freescale/*.dts`.

In fact, software reuse is one of the most important features of the Linux kernel, especially of the ARM implementation which always has to fight with an insane number of possibilities of the System-on-Chip CPUs. The whole board-specific hardware is described in DTs and is not part of the kernel image itself. The hardware description is in its own separate binary, called the Device Tree Blob (DTB) (section *device tree*).

Please read section PHYTEC i.MX 93 BSP Device Tree Concept to get an understanding of our i.MX 9 BSP device tree model.

The following sections provide an overview of the supported hardware components and their operating system drivers on the i.MX 9 platform. Further changes can be ported upon customer request.

7.1 i.MX 93 Pin Muxing

The i.MX 93 SoC contains many peripheral interfaces. In order to reduce package size and lower overall system cost while maintaining maximum functionality, many of the i.MX 93 terminals can multiplex up to eight signal functions. Although there are many combinations of pin multiplexing that are possible, only a certain number of sets, called IO sets, are valid due to timing limitations. These valid IO sets were carefully chosen to provide many possible application scenarios for the user.

Please refer to our Hardware Manual or the NXP i.MX 93 Reference Manual for more information about the specific pins and the muxing capabilities.

The IO set configuration, also called muxing, is done in the Device Tree. The driver pinctrl-single reads the DT's node fsl,pins, and does the appropriate pin muxing.

The following is an example of the pin muxing of the UART1 device in imx93-phyboard-segin.dts:

```
pinctrl_uart1: uart1grp {
        fsl,pins = <
                MX93_PAD_UART1_RXD__LPUART1_RX     0x31e
                MX93_PAD_UART1_TXD__LPUART1_TX     0x30e
        >;
};
```

The first part of the string MX93_PAD_UART1_RXD___LPUART1_RX names the pad (in this example UART1_RXD). The second part of the string (LPUART1_RX) is the desired muxing option for this pad. The pad setting value (hex value on the right) defines different modes of the pad, for example, if internal pull resistors are activated or not. In this case, the internal pull up is activated.

The device tree representation for UART1 pinmuxing: https://github.com/phytec/linux-phytec-imx/blob/v6.6.23-2.0.0-phy8/arch/arm64/boot/dts/freescale/imx93-phyboard-segin.dts#L259

7.2 Network

phyBOARD-Segin/Nash i.MX 93 provides two ethernet interfaces.

- On phyBOARD-Segin i.MX 93 we have:
  - a 100 megabit Ethernet provided by phyCORE-i.MX 93
  - and 100 megabit Ethernet provided by phyBOARD.
- On phyBOARD-Nash i.MX 93 we have:
  - a 100 megabit Ethernet provided by phyCORE-i.MX 93
  - and 1 gigabit Ethernet provided by phyBOARD.

All interfaces offer a standard Linux network port that can be programmed using the BSD socket interface. The whole network configuration is handled by the systemd-networkd daemon. The relevant configuration files can be found on the target in `/lib/systemd/network/` as well as the BSP in `meta-ampliphy/recipes-core/systemd/systemd-conf`.

IP addresses can be configured within *.network files. The interfaces are configured to static IP as default. The default IP address and netmask for eth0 is:

```
eth0: 192.168.3.11/24
```

To configure eth0 to dynamic IP over DHCP, go to `/lib/systemd/network/\*-eth0.network` and delete the line:

```
Address=192.168.3.11/24
```

The DT Ethernet setup might be split into two files depending on your hardware configuration: the module DT and the board-specific DT. The device tree set up for the ethernet where the PHY is populated on the SoM can be found here: https://github.com/phytec/linux-phytec-imx/blob/v6.6.23-2.0.0-phy8/arch/arm64/boot/dts/freescale/imx93-phycore-som.dtsi#L61.

The device tree set up for EQOS Ethernet IP core where the PHY is populated on the phyBOARD-Segin/Nash i.MX 93 can be found here: https://github.com/phytec/linux-phytec-imx/blob/v6.6.23-2.0.0-phy8/arch/arm64/boot/dts/freescale/imx93-phyboard-segin.dts#L114 or here: https://github.com/phytec/linux-phytec-imx/blob/v6.6.23-2.0.0-phy8/arch/arm64/boot/dts/freescale/imx93-phyboard-nash.dts#L83.

7.2.1 Network Environment Customization

U-boot network-environment

- To find the Ethernet settings in the target bootloader:

  ```
  u-boot=> printenv ipaddr serverip netmask
  ```

- With your development host set to IP 192.168.3.10 and netmask 255.255.255.0, the target should return:

```
u-boot=> printenv ipaddr serverip netmask
ipaddr=192.168.3.11
serverip=192.168.3.10
netmask=255.225.255.0
```

- If you need to make any changes:

```
u-boot=> setenv <parameter> <value>
```

  <parameter> should be one of ipaddr, netmask, gatewayip or serverip. <value> will be the actual value of the chosen parameter.

- The changes you made are temporary for now. To save these:

```
u-boot=> saveenv
```

Here you can also change the IP address to DHCP instead of using a static one.

- Configure:

```
u-boot=> setenv ip dhcp
```

- Set up paths for TFTP and NFS. A modification could look like this:

```
u-boot=> setenv nfsroot /home/user/nfssrc
```

Please note that these modifications will only affect the bootloader settings.

Tip

Variables like nfsroot and netargs can be overwritten by the U-boot External Environment. For netboot, the external environment will be loaded from tftp. For example, to locally set the nfsroot variable in a `bootenv.txt` file, locate the tftproot directory:

```
nfsroot=/home/user/nfssrc
```

There is no need to store the info on the target. Please note that this does not work for variables like ipaddr or serveraddr as they need to be already set when the external environment is being loaded.

Kernel network-environment

- Find the ethernet settings for eth0 in the target kernel:

```
target:~$ ip -statistics address show eth0
2: eth0: <NO-CARRIER,BROADCAST,MULTICAST,UP> mtu 1500 qdisc mq state UP group default qlen␣
↪1000
    link/ether 50:2d:f4:19:d6:33 brd ff:ff:ff:ff:ff:ff
    RX:  bytes packets errors dropped  missed   mcast
              0       0      0       0       0       0
    TX:  bytes packets errors dropped carrier collsns
              0       0      0       0       0       0
```

- Temporary adaption of the eth0 configuration:

```
target:~$ ip address add 192.168.3.11/24 dev eth0
```

7.2.2 WLAN

Note

For now, only phyBOARD-Segin i.MX 93 supports WLAN/Bluetooth features. WLAN/Bluetooth is thus not supported on phyBOARD-Nash i.MX 93 yet.

WLAN and Bluetooth on the phyBOARD-Segin i.MX 93 are provided by the PEB-WLBT-05 expansion card. The PEB-WLBT-05 for phyBOARD-Segin i.MX 93 Quickstart Guide shows you how to install the PEB-WLBT-05.

Tip

With the BSP Version PD24.2.0 and newer, the PEB-WLBT-05 overlay needs to be activated first, otherwise the PEB-WLBT-05 won't be recognized.

```
target:~$ vi /boot/bootenv.txt
```

Afterwards the bootenv.txt file should look like this (it can also contain other devicetree overlays!):

```
overlays=imx93-phyboard-segin-peb-wlbt-05.dtbo
```

The changes will be applied after a reboot:

```
target:~$ reboot
```

For further information about devicetree overlays, read the *device tree* chapter.

For WLAN and Bluetooth support, we use the Sterling-LWB module from LSR. This module supports 2,4 GHz bandwidth and can be run in several modes, like client mode, Access Point (AP) mode using WEP, WPA, WPA2 encryption, and more. More information about the module can be found at https://connectivity-staging.s3.us-east-2.amazonaws.com/2019-09/CS-DS-SterlingLWB%20v7_2.pdf

Note

By default, bluetooth is not supported on phyBOARD-Segin i.MX 93 with PEB-WLBT-05 expansion card due to hard-wired connections. However, it is possible to re-work PEB-WLBT-05 card by adjusting solder pads and enabling bluetooth in the software. Please contact your PHYTEC representative for more information.

Connecting to a WLAN Network

First set the correct regulatory domain for your country:

```
target:~$ iw reg set DE
target:~$ iw reg get
```

You will see:

```
country DE: DFS-ETSI
   (2400 - 2483 @ 40), (N/A, 20), (N/A)
   (5150 - 5250 @ 80), (N/A, 20), (N/A), NO-OUTDOOR
   (5250 - 5350 @ 80), (N/A, 20), (0 ms), NO-OUTDOOR, DFS
   (5470 - 5725 @ 160), (N/A, 26), (0 ms), DFS
   (57000 - 66000 @ 2160), (N/A, 40), (N/A)
```

Set up the wireless interface:

```
target:~$ ip link
target:~$ ip link set up dev wlan0
```

Now you can scan for available networks:

```
target:~$ iw wlan0 scan | grep SSID
```

You can use a cross-platform supplicant with support for WEP, WPA, and WPA2 called wpa_supplicant for an encrypted connection.

To do so, add the network-credentials to the file `/etc/wpa_supplicant.conf`:

```
country=DE
network={
    ssid="<SSID>"
    proto=WPA2
    psk="<KEY>"
}
```

Now a connection can be established:

```
target:~$ wpa_supplicant -D nl80211 -c /etc/wpa_supplicant.conf -i wlan0 -B
```

This should result in the following output:

```
Successfully initialized wpa_supplicant
```

The ip address is automatically configured over DHCP. For other possible IP configurations, see section *Changing the Network Configuration* in the Yocto Reference Manual (scarthgap).

7.3 SD card

The i.MX 93 supports a slot for Secure Digital cards to be used as general-purpose block devices. These devices can be used in the same way as any other block device.

Warning

These kinds of devices are hot-pluggable. Nevertheless, you must ensure not to unplug the device while it is still mounted. This may result in data loss!

After inserting an SD card, the kernel will generate new device nodes in /dev. The full device can be reached via its /dev/mmcblk1 device node. SD card partitions will show up as:

```
/dev/mmcblk1p<Y>
```

<Y> counts as the partition number starting from 1 to the max count of partitions on this device. The partitions can be formatted with any kind of file system and also handled in a standard manner, e.g. the mount and umount command work as expected.

Tip

These partition device nodes will only be available if the card contains a valid partition table ("hard disk" like handling). If no partition table is present, the whole device can be used as a file system ("floppy" like handling). In this case, /dev/mmcblk1 must be used for formatting and mounting. The cards are always mounted as being writable.

DT configuration for the MMC (SD card slot) interface can be found here: https://github.com/phytec/linux-phytec-imx/blob/v6.6.23-2.0.0-phy8/arch/arm64/boot/dts/freescale/imx93-phyboard-segin.dts#L213 or here: https://github.com/phytec/linux-phytec-imx/blob/v6.6.23-2.0.0-phy8/arch/arm64/boot/dts/freescale/imx93-phyboard-nash.dts#L202

DT configuration for the eMMC interface can be found here: https://github.com/phytec/linux-phytec-imx/blob/v6.6.23-2.0.0-phy8/arch/arm64/boot/dts/freescale/imx93-phycore-som.dtsi#L194 or here:

7.4 e.MMC Devices

PHYTEC modules like phyCORE-i.MX 93 are populated with an e.MMC memory chip as the main storage. e.MMC devices contain raw Multi-Level Cells (MLC) or Triple-Level Cells (TLC) combined with a memory controller that handles ECC and wear leveling. They are connected via an SD/MMC interface to the i.MX 93 and are represented as block devices in the Linux kernel like SD cards, flash drives, or hard disks.

The electric and protocol specifications are provided by JEDEC (https://www.jedec.org/standards-documents/technology-focus-areas/flash-memory-ssds-ufs-emmc/e-mmc). The e.MMC manufacturer's datasheet is relatively short and meant to be read together with the supported version of the JEDEC e.MMC standard.

PHYTEC currently utilizes the e.MMC chips with JEDEC Version 5.0 and 5.1

7.4.1 Extended CSD Register

e.MMC devices have an extensive amount of extra information and settings that are available via the Extended CSD registers. For a detailed list of the registers, see manufacturer datasheets and the JEDEC standard.

In the Linux user space, you can query the registers:

```
target:~$ mmc extcsd read /dev/mmcblk0
```

You will see:

```
============================================
   Extended CSD rev 1.7 (MMC 5.0)
============================================

 Card Supported Command sets [S_CMD_SET: 0x01]
 [...]
```

7.4.2 Enabling Background Operations (BKOPS)

In contrast to raw NAND Flash, an e.MMC device contains a Flash Transfer Layer (FTL) that handles the wear leveling, block management, and ECC of the raw MLC or TLC. This requires some maintenance tasks (for example erasing unused blocks) that are performed regularly. These tasks are called **Background Operations (BKOPS)**.

By default (depending on the chip), the background operations may or may not be executed periodically, impacting the worst-case read and write latency.

The JEDEC Standard has specified a method since version v4.41 that the host can issue BKOPS manually. See the JEDEC Standard chapter Background Operations and the description of registers BKOPS_EN (Reg: 163) and BKOPS_START (Reg: 164) in the e.MMC datasheet for more details.

Meaning of Register BKOPS_EN (Reg: 163) Bit MANUAL_EN (Bit 0):

- Value 0: The host does not support the manual trigger of BKOPS. Device write performance suffers.
- Value 1: The host does support the manual trigger of BKOPS. It will issue BKOPS from time to time when it does not need the device.

The mechanism to issue background operations has been implemented in the Linux kernel since v3.7. You only have to enable BKOPS_EN on the e.MMC device (see below for details).

The JEDEC standard v5.1 introduces a new automatic BKOPS feature. It frees the host to trigger the background operations regularly because the device starts BKOPS itself when it is idle (see the description of bit AUTO_EN in register BKOPS_EN (Reg: 163)).

- To check whether *BKOPS_EN* is set, execute:

  ```
  target:~$ mmc extcsd read /dev/mmcblk0 | grep BKOPS_EN
  ```

  The output will be, for example:

  ```
  Enable background operations handshake [BKOPS_EN]: 0x01
  #OR
  Enable background operations handshake [BKOPS_EN]: 0x00
  ```

  Where value 0x00 means BKOPS_EN is disabled and device write performance suffers. Where value 0x01 means BKOPS_EN is enabled and the host will issue background operations from time to time.

- Enabling can be done with this command:

  ```
  target:~$ target:~$ mmc --help

  [...]
  mmc bkops_en <auto|manual> <device>
      Enable the eMMC BKOPS feature on <device>.
      The auto (AUTO_EN) setting is only supported on eMMC 5.0 or newer.
      Setting auto won't have any effect if manual is set.
      NOTE!  Setting manual (MANUAL_EN) is one-time programmable (unreversible) change.
  ```

- To set the BKOPS_EN bit, execute:

  ```
  target:~$ mmc bkops_en manual /dev/mmcblk0
  ```

- To ensure that the new setting is taken over and the kernel triggers BKOPS by itself, shut down the system:

```
target:~$ poweroff
```

Tip

The BKOPS_EN bit is one-time programmable only. It cannot be reversed.

7.4.3 Reliable Write

There are two different Reliable Write options:

1. Reliable Write option for a whole e.MMC device/partition.
2. Reliable Write for single write transactions.

Tip

Do not confuse e.MMC partitions with partitions of a DOS, MBR, or GPT partition table (see the previous section).

The first Reliable Write option is mostly already enabled on the e.MMCs mounted on the phyCORE-i.MX 93 SoMs. To check this on the running target:

```
target:~$ mmc extcsd read /dev/mmcblk0 | grep -A 5 WR_REL_SET
Write reliability setting register [WR_REL_SET]: 0x1f
 user area: the device protects existing data if a power failure occurs during a write o
peration
 partition 1: the device protects existing data if a power failure occurs during a write
 operation
 partition 2: the device protects existing data if a power failure occurs during a write
 operation
 partition 3: the device protects existing data if a power failure occurs during a write
 operation
 partition 4: the device protects existing data if a power failure occurs during a write
 operation
--
 Device supports writing EXT_CSD_WR_REL_SET
 Device supports the enhanced def. of reliable write
```

Otherwise, it can be enabled with the mmc tool:

```
target:~$ mmc --help

[...]
mmc write_reliability set <-y|-n|-c> <partition> <device>
    Enable write reliability per partition for the <device>.
    Dry-run only unless -y or -c is passed.
    Use -c if more partitioning settings are still to come.
    NOTE!  This is a one-time programmable (unreversible) change.
```

The second Reliable Write option is the configuration bit Reliable Write Request parameter (bit 31) in command CMD23. It has been used in the kernel since v3.0 by file systems, e.g. ext4 for the journal and

user space applications such as fdisk for the partition table. In the Linux kernel source code, it is handled via the flag REQ_META.

Conclusion: ext4 file system with mount option data=journal should be safe against power cuts. The file system check can recover the file system after a power failure, but data that was written just before the power cut may be lost. In any case, a consistent state of the file system can be recovered. To ensure data consistency for the files of an application, the system functions fdatasync or fsync should be used in the application.

7.4.4 Resizing ext4 Root Filesystem

When flashing the SD card image to e.MMC the ext4 root partition is not extended to the end of the e.MMC. parted can be used to expand the root partition. The example works for any block device such as e.MMC, SD card, or hard disk.

- Get the current device size:

```
target:~$ parted /dev/mmcblk0 print
```

- The output looks like this:

```
Model: MMC Q2J55L (sd/mmc)
Disk /dev/mmcblk0: 7617MB
Sect[ 1799.850385]  mmcblk0: p1 p2
or size (logical/physical): 512B/512B
Partition Table: msdos
Disk Flags:

Number  Start   End     Size    Type     File system  Flags
 1      4194kB  72.4MB  68.2MB  primary  fat16        boot, lba
 2      72.4MB  537MB   465MB   primary  ext4
```

- Use parted to resize the root partition to the max size of the device:

```
target:~$ parted /dev/mmcblk0 resizepart 2 100%
Information: You may need to update /etc/fstab.

target:~$ parted /dev/mmcblk0 print
Model: MMC Q2J55L (sd/mmc)
Disk /dev/mmcblk0: 7617MB
Sector size (logical/physical): 512[ 1974.191657]  mmcblk0: p1 p2
B/512B
Partition Table: msdos
Disk Flags:

Number  Start   End     Size    Type     File system  Flags
 1      4194kB  72.4MB  68.2MB  primary  fat16        boot, lba
 2      72.4MB  7617MB  7545MB  primary  ext4
```

- Resize the filesystem to a new partition size:

```
target:~$ resize2fs /dev/mmcblk0p2
resize2fs 1.46.1 (9-Feb-2021)
Filesystem at /dev/mmcblk0p2 is mounted on /; on-line resizing required
[ 131.609512] EXT4-fs (mmcblk0p2): resizing filesystem
```

(continues on next page)

(continued from previous page)

```
from 454136 to 7367680 blocks
old_desc_blocks = 4, new_desc_blocks = 57
[ 131.970278] EXT4-fs (mmcblk0p2): resized filesystem to 7367680
The filesystem on /dev/mmcblk0p2 is now 7367680 (1k) blocks long
```

Increasing the filesystem size can be done while it is mounted. But you can also boot the board from an SD card and then resize the file system on the e.MMC partition while it is not mounted.

7.4.5 Enable pseudo-SLC Mode

e.MMC devices use MLC or TLC (https://en.wikipedia.org/wiki/Multi-level_cell) to store the data. Compared with SLC used in NAND Flash, MLC or TLC have lower reliability and a higher error rate at lower costs.

If you prefer reliability over storage capacity, you can enable the pseudo-SLC mode or SLC mode. The method used here employs the enhanced attribute, described in the JEDEC standard, which can be set for continuous regions of the device. The JEDEC standard does not specify the implementation details and the guarantees of the enhanced attribute. This is left to the chipmaker. For the Micron chips, the enhanced attribute increases the reliability but also halves the capacity.

Warning

When enabling the enhanced attribute on the device, all data will be lost.

The following sequence shows how to enable the enhanced attribute.

- First obtain the current size of the e.MMC device with:

  ```
  target:~$ parted -m /dev/mmcblk0 unit B print
  ```

  You will receive:

  ```
  BYT;
  /dev/mmcblk0:63652757504B:sd/mmc:512:512:unknown:MMC S0J58X:;
  ```

  As you can see this device has 63652757504 Byte = 60704 MiB.

- To get the maximum size of the device after pseudo-SLC is enabled use:

  ```
  target:~$ mmc extcsd read /dev/mmcblk0 | grep ENH_SIZE_MULT -A 1
  ```

  which shows, for example:

  ```
  Max Enhanced Area Size [MAX_ENH_SIZE_MULT]: 0x000764
  i.e. 3719168 KiB
  --
  Enhanced User Data Area Size [ENH_SIZE_MULT]: 0x000000
  i.e. 0 KiB
  ```

  Here the maximum size is 3719168 KiB = 3632 MiB.

- Now, you can set enhanced attribute for the whole device, e.g. 3719168 KiB, by typing:

  ```
  target:~$ mmc enh_area set -y 0 3719168 /dev/mmcblk0
  ```

You will get:

```
Done setting ENH_USR area on /dev/mmcblk0
setting OTP PARTITION_SETTING_COMPLETED!
Setting OTP PARTITION_SETTING_COMPLETED on /dev/mmcblk0 SUCCESS
Device power cycle needed for settings to take effect.
Confirm that PARTITION_SETTING_COMPLETED bit is set using 'extcsd read' after power cycle
```

- To ensure that the new setting has taken over, shut down the system:

```
target:~$ poweroff
```

  and perform a power cycle. It is recommended that you verify the settings now.

- First, check the value of ENH_SIZE_MULT which must be 3719168 KiB:

```
target:~$ mmc extcsd read /dev/mmcblk0 | grep ENH_SIZE_MULT  -A 1
```

  You should receive:

```
Max Enhanced Area Size [MAX_ENH_SIZE_MULT]: 0x000764
i.e. 3719168 KiB
--
Enhanced User Data Area Size [ENH_SIZE_MULT]: 0x000764
i.e. 3719168 KiB
```

- Finally, check the size of the device:

```
target:~$ parted -m /dev/mmcblk0 unit B print
BYT;
/dev/mmcblk0:31742492672B:sd/mmc:512:512:unknown:MMC S0J58X:;
```

7.4.6 Erasing the Device

It is possible to erase the e.MMC device directly rather than overwriting it with zeros. The e.MMC block management algorithm will erase the underlying MLC or TLC or mark these blocks as discard. The data on the device is lost and will be read back as zeros.

- After booting from SD card execute:

```
target:~$ blkdiscard -f --secure /dev/mmcblk0
```

  The option –secure ensures that the command waits until the eMMC device has erased all blocks. The -f (force) option disables all checking before erasing and it is needed when the eMMC device contains existing partitions with data.

Tip

```
target:~$ dd if=/dev/zero of=/dev/mmcblk0 conv=fsync
```

also destroys all information on the device, but this command is bad for wear leveling and takes much longer!

7.4.7 e.MMC Boot Partitions

An e.MMC device contains four different hardware partitions: user, boot1, boot2, and rpmb.

The user partition is called the User Data Area in the JEDEC standard and is the main storage partition. The partitions boot1 and boot2 can be used to host the bootloader and are more reliable. Which partition the i.MX 93 uses to load the bootloader is controlled by the boot configuration of the e.MMC device. The partition rpmb is a small partition and can only be accessed via a trusted mechanism.

Furthermore, the user partition can be divided into four user-defined General Purpose Area Partitions. An explanation of this feature exceeds the scope of this document. For further information, see the JEDEC Standard Chapter 7.2 Partition Management.

Tip

Do not confuse e.MMC partitions with partitions of a DOS, MBR, or GPT partition table.

The current PHYTEC BSP does not use the extra partitioning feature of e.MMC devices. The U-Boot is flashed at the beginning of the user partition. The U-Boot environment is placed at a fixed location after the U-Boot. An MBR partition table is used to create two partitions, a FAT32 boot, and ext4 rootfs partition. They are located right after the U-Boot and the U-Boot environment. The FAT32 boot partition contains the kernel and device tree.

With e.MMC flash storage it is possible to use the dedicated boot partitions for redundantly storing the bootloader. The Bootloader environment still resides in the user area before the first partition. The user area also still contains the bootloader which the image first shipped during its initialization process. Below is an example, to flash the bootloader to one of the two boot partitions and switch the boot device via userspace commands.

Via userspace Commands

On the host, run:

```
host:~$ scp <bootloader> root@192.168.3.11:/tmp/
```

The partitions boot1 and boot2 are read-only by default. To write to them from user space, you have to disable `force_ro` in the sysfs.

To manually write the bootloader to the e.MMC boot partitions, first disable the write protection:

```
target:~$ echo 0 > /sys/block/mmcblk0boot0/force_ro
target:~$ echo 0 > /sys/block/mmcblk0boot1/force_ro
```

Write the bootloader to the e.MMC boot partitions:

```
target:~$ dd if=/tmp/<bootloader> of=/dev/mmcblk0boot0
target:~$ dd if=/tmp/<bootloader> of=/dev/mmcblk0boot1
```

The following table is for the offset of the i.MX 93 SoC:

SoC	Offset User Area	Offset Boot Partition	e.MMC Device
i.MX 93	32 kiB	0 kiB	/dev/mmcblk0

After that set the boot partition from user space using the `mmc` tool:

(for 'boot0') :

```
target:~$ mmc bootpart enable 1 0 /dev/mmcblk0
```

(for 'boot1') :

```
target:~$ mmc bootpart enable 2 0 /dev/mmcblk0
```

To disable booting from the e.MMC boot partitions simply enter the following command:

```
target:~$ mmc bootpart enable 0 0 /dev/mmcblk0
```

To explicitly enable booting from the e.MMC user area, run:

```
target:~$ mmc bootpart enable 7 0 /dev/mmcblk0
```

7.5 GPIOs

The phyBOARD-Segin/Nash i.MX 93 doesn't have a set of pins especially dedicated for user I/Os since all GPIOs are used by kernel device drivers or used for a specific purpose. The processor has organized its GPIOs into five banks of 32 GPIOs each (GPIO1 – GPIO4) GPIOs. gpiochip0, gpiochip32, gpiochip64 and gpiochip96 are the sysfs representation of these internal i.MX 93 GPIO banks GPIO1 – GPIO4.

The GPIOs are identified as GPIO<X>_<Y> (e.g. GPIO4_07). <X> identifies the GPIO bank and counts from 1 to 4, while <Y> stands for the GPIO within the bank. <Y> is being counted from 0 to 31 (32 GPIOs on each bank).

By contrast, the Linux kernel uses a single integer to enumerate all available GPIOs in the system. The formula to calculate the right number is:

```
Linux GPIO number: <N> = (<X> - 1) * 32 + <Y>
```

Accessing GPIOs from userspace will be done using the libgpiod. It provides a library and tools for interacting with the Linux GPIO character device. Examples of some usages of various tools:

- Detecting the gpiochips on the chip:

  ```
  target:~$ gpiodetect
  gpiochip0 [43810000.gpio] (32 lines)
  gpiochip1 [43820000.gpio] (32 lines)
  gpiochip2 [43830000.gpio] (32 lines)
  gpiochip3 [47400000.gpio] (32 lines)
  ```

Note

Order of GPIOchips in `i.MX 93 Application Processor Reference Manual` and in Linux kernel differ!

GPIOchip address	Linux	Reference Manual
0x43810000	gpiochip0	gpiochip2
0x43820000	gpiochip1	gpiochip3
0x43830000	gpiochip2	gpiochip4
0x47400000	gpiochip3	gpiochip1

- Show detailed information about the gpiochips. Like their names, consumers, direction, active state, and additional flags:

```
target:~$ gpioinfo -c gpiochip0
```

- Read the value of a GPIO (e.g GPIO 3 from chip0):

```
target:~$ gpioget -c gpiochip0 3
```

- Set the value of GPIO 3 on chip0 to 0 and daemonize:

```
target:~$ gpioset -z -c gpiochip0 3=0
```

Note

When demonizing gpioset command please note that the process is still running in the background and you need to kill it afterward to release the GPIO. Otherwise you might get an error when trying to change state of the same GPIO:

```
target:~$ gpioset -z -c gpiochip0 3=1
gpioset: unable to request lines on chip '/dev/gpiochip0': Device or resource busy
```

This is the expected behavior in libgpiod version 2.

As a workaround it is possible to use the `-t 0` switch:

```
target:~$ gpioset -t0 -c gpiochip0 3=0
```

- Help text of gpioset shows possible options:

```
target:~$ gpioset --help
Usage: gpioset [OPTIONS] <line=value>...

Set values of GPIO lines.

Lines are specified by name, or optionally by offset if the chip option
is provided.
Values may be '1' or '0', or equivalently 'active'/'inactive' or 'on'/'off'.

The line output state is maintained until the process exits, but after that
is not guaranteed.

Options:
      --banner          display a banner on successful startup
-b, --bias <bias>     specify the line bias
                        Possible values: 'pull-down', 'pull-up', 'disabled'.
                        (default is to leave bias unchanged)
      --by-name         treat lines as names even if they would parse as an offset
-c, --chip <chip>     restrict scope to a particular chip
-C, --consumer <name> consumer name applied to requested lines (default is 'gpioset')
-d, --drive <drive>   specify the line drive mode
                        Possible values: 'push-pull', 'open-drain', 'open-source'.
                        (default is 'push-pull')
-h, --help            display this help and exit
-l, --active-low      treat the line as active low
-p, --hold-period <period>
                        the minimum time period to hold lines at the requested values
```

(continues on next page)

(continued from previous page)

```
-s, --strict          abort if requested line names are not unique
-t, --toggle <period>[,period]...
                        toggle the line(s) after the specified period(s)
                        If the last period is non-zero then the sequence repeats.
      --unquoted        don't quote line names
-v, --version         output version information and exit
-z, --daemonize       set values then detach from the controlling terminal

Chips:
   A GPIO chip may be identified by number, name, or path.
   e.g. '0', 'gpiochip0', and '/dev/gpiochip0' all refer to the same chip.

Periods:
   Periods are taken as milliseconds unless units are specified. e.g. 10us.
   Supported units are 's', 'ms', and 'us'.

*Note*
   The state of a GPIO line controlled over the character device reverts to default
   when the last process referencing the file descriptor representing the device file exits.
   This means that it's wrong to run gpioset, have it exit and expect the line to continue
   being driven high or low. It may happen if given pin is floating but it must be␣
↪interpreted
   as undefined behavior.
```

Warning

Some of the user IOs are used for special functions. Before using a user IO, refer to the schematic or the hardware manual of your board to ensure that it is not already in use.

7.5.1 GPIOs via sysfs

Warning

Accessing gpios via sysfs is deprecated and we encourage to use libgpiod instead.

Support to access GPIOs via sysfs is not enabled by default any more. It is only possible with manually enabling CONFIG_GPIO_SYSFS in the kernel configuration. To make CONFIG_GPIO_SYSFS visible in menuconfig the option CONFIG_EXPERT has to be enabled first.

You can also add this option for example to the imx9_phytec_defconfig config in the linux kernel sources under arch/arm64/configs

```
..
CONFIG_GPIO_SYSFS=y
..
```

7.6 ADC

The PHYTEC i.MX 93 include general purpose Analog-to-Digital Converters (ADC) which can be used for interfacing analog sensors.

Reading the ADC values can be done through sysfs:

```
target:~$ cat /sys/bus/iio/devices/iio:deviceX/in_voltageY_raw
```

On phyBOARD-Nash i.MX 93 the ADC lines are accessible on X16 expansion connector:

ADC input	X16 pin
ADC_IN0	47
ADC_IN2	49

7.7 LEDs

If any LEDs are connected to GPIOs, you have the possibility to access them by a special LED driver interface instead of the general GPIO interface (section GPIOs). You will then access them using `/sys/class/leds/` instead of `/sys/class/gpio/`. The maximum brightness of the LEDs can be read from the `max_brightness` file. The brightness file will set the brightness of the LED (taking a value from 0 up to max_brightness). Most LEDs do not have hardware brightness support and will just be turned on by all non-zero brightness settings.

Below is a simple example.

To get all available LEDs, type:

```
target:~$ ls /sys/class/leds
green:heartbeat@  mmc0::@  mmc1::@  yellow:@
```

Here the LEDs `green:heartbeat` is on the phyCORE-i.MX 93. If you are using phyBOARD-Segin there is also `yellow` LED which is populated on the PEB-EVAL-01.

- To toggle the LEDs ON:

  ```
  target:~$ echo 1 > /sys/class/leds/green\:heartbeat/brightness
  ```

- To toggle OFF:

  ```
  target:~$ echo 0 > /sys/class/leds/green\:heartbeat/brightness
  ```

Device tree configuration for the User I/O configuration can be found here: https://github.com/phytec/linux-phytec-imx/blob/v6.6.23-2.0.0-phy8/arch/arm64/boot/dts/freescale/imx93-phyboard-segin-peb-eval-01.dtso#L33

7.8 I²C Bus

The i.MX 93 contains several Multimaster fast-mode I²C modules. PHYTEC boards provide plenty of different I²C devices connected to the I²C modules of the i.MX 93. This section describes the basic device usage and its DT representation of some I²C devices integrated into our phyBOARD-Segin/Nash i.MX 93.

The device tree node for i2c contains settings such as clock-frequency to set the bus frequency and the pin control settings including scl-gpios and sda-gpios which are alternate pin configurations used for bus recovery.

General I²C3 bus configuration (e.g. imx93-phycore-som.dtsi): https://github.com/phytec/linux-phytec-imx/blob/v6.6.23-2.0.0-phy8/arch/arm64/boot/dts/freescale/imx93-phycore-som.dtsi#L88

General I²C2 bus configuration for imx93-phyboard-segin.dts: https://github.com/phytec/linux-phytec-imx/blob/v6.6.23-2.0.0-phy8/arch/arm64/boot/dts/freescale/imx93-phyboard-segin.dts#L155 or for imx93-phyboard-nash.dts: https://github.com/phytec/linux-phytec-imx/blob/v6.6.23-2.0.0-phy8/arch/arm64/boot/dts/freescale/imx93-phyboard-nash.dts#L113

7.9 EEPROM

There are two different I2C EEPROM flashes populated on phyCORE-i.MX 93 SoM and on the phyBOARD-Segin/Nash i.MX 93. For now only the one on the phyCORE-i.MX 93 is enabled, and it is used for board detection.

7.9.1 I2C EEPROM on phyCORE-i.MX 93

The I2C EEPROM on the phyCORE-i.MX 93 SoM has its memory divided into two parts.

- normal area (size: 4096 bytes, bus: I2C-2, addr: 0x50)
- ID page (size: 32 bytes, bus: I2C-2, addr: 0x58)

It is possible to read and write from the device populated:

```
target:~$ hexdump -C /sys/class/i2c-dev/i2c-2/device/2-0058/eeprom
```

To read and print the first 1024 bytes of the EEPROM as a hex number, execute:

```
target:~$ dd if=/sys/class/i2c-dev/i2c-2/device/2-0050/eeprom bs=1 count=1024  | od -x
```

To fill the whole EEPROM (ID page) with zeros we first need to disable the EEPROM write protection, use:

```
target:~$ gpioset -t0 -c 2 21=0
```

Then the EEPROM can be written to:

```
target:~$ dd if=/dev/zero of=/sys/class/i2c-dev/i2c-2/device/2-0058/eeprom bs=32 count=1
```

To re-enable EEPROM wire protection, use:

```
target:~$ gpioset -t0 -c 2 21=1
```

Warning

The first 256 bytes of the normal EEPROM area (bus: I2C-2 addr: 0x50) are reserved and should not be overwritten! (See below)

7.9.2 EEPROM SoM Detection

PHYTEC uses first 256 bytes in EEPROM normal area to store information about the SoM. This includes PCB revision and mounting options.

The EEPROM data is read at a really early stage during startup. It is used to select the correct RAM configuration. This makes it possible to use the same bootloader image for different RAM sizes and choose the correct DTS overlays automatically.

If the first 256 bytes of the normal area are deleted, the bootloader will fall back to the phyCORE-i.MX 93 Kit RAM setup, which is 1GiB RAM.

Warning

Data in the first 256 bytes of the normal EEPROM area (bus: I2C-2 addr: 0x50) shouldn't be erased or corrupted! This might influence the behavior of the bootloader. The board might not boot correctly anymore.

7.9.3 Rescue EEPROM Data

The hardware introspection data is pre-written on the EEPROM data spaces. If you have accidentally deleted or overwritten the HW data, you could contact our support!

DT representation, e.g. in phyCORE-i.MX 93 file can be found in our PHYTEC git: https://github.com/phytec/linux-phytec-imx/blob/v6.6.23-2.0.0-phy8/arch/arm64/boot/dts/freescale/imx93-phycore-som.dtsi#L172

7.10 RTC

RTCs can be accessed via `/dev/rtc*`. Because PHYTEC boards have often more than one RTC, there might be more than one RTC device file.

- To find the name of the RTC device, you can read its sysfs entry with:

```
target:~$ cat /sys/class/rtc/rtc*/name
```

- You will get, for example:

```
rtc-rv3028 0-0052
snvs_rtc 30370000.snvs:snvs-rtc-lp
```

Tip

This will list all RTCs including the non-I²C RTCs. Linux assigns RTC device IDs based on the device tree/aliases entries if present.

Date and time can be manipulated with the `hwclock` tool and the date command. To show the current date and time set on the target:

```
target:~$ date
Thu Jan  1 00:01:26 UTC 1970
```

Change the date and time with the date command. The date command sets the time with the following syntax "YYYY-MM-DD hh:mm:ss (+|-)hh:mm":

```
target:~$ date -s "2022-03-02 11:15:00 +0100"
Wed Mar  2 10:15:00 UTC 2022
```

Note

Your timezone (in this example +0100) may vary.

Using the date command does not change the time and date of the RTC, so if we were to restart the target those changes would be discarded. To write to the RTC we need to use the `hwclock` command. Write the current date and time (set with the date command) to the RTC using the `hwclock` tool and reboot the target to check if the changes were applied to the RTC:

```
target:~$ hwclock -w
target:~$ reboot
    .
    .
    .
target:~$ date
Wed Mar  2 10:34:06 UTC 2022
```

To set the time and date from the RTC use:

```
target:~$ date
Thu Jan  1 01:00:02 UTC 1970
target:~$ hwclock -s
target:~$ date
Wed Mar  2 10:45:01 UTC 2022
```

7.10.1 RTC Wakealarm

It is possible to issue an interrupt from the RTC to wake up the system. The format uses the Unix epoch time, which is the number of seconds since UTC midnight on 1 January 1970. To wake up the system after 4 minutes from suspend to ram state, type:

```
target:~$ echo "+240" > /sys/class/rtc/rtc0/wakealarm
target:~$ echo mem > /sys/power/state
```

Note

Internally the wake alarm time will be rounded up to the next minute since the alarm function doesn't support seconds.

7.10.2 RTC Parameters

RTCs have a few abilities which can be read/set with the help of `hwclock` tool.

- We can check RTC supported features with:

  ```
  target:~$ hwclock --param-get features
  The RTC parameter 0x0 is set to 0x71.
  ```

  What this value means is encoded in kernel, each set bit translates to:

```
#define RTC_FEATURE_ALARM               0
#define RTC_FEATURE_ALARM_RES_MINUTE    1
#define RTC_FEATURE_NEED_WEEK_DAY       2
#define RTC_FEATURE_ALARM_RES_2S        3
#define RTC_FEATURE_UPDATE_INTERRUPT    4
#define RTC_FEATURE_CORRECTION          5
#define RTC_FEATURE_BACKUP_SWITCH_MODE  6
#define RTC_FEATURE_ALARM_WAKEUP_ONLY   7
#define RTC_FEATURE_CNT                 8
```

- We can check RTC BSM (Backup Switchover Mode) with:

```
target:~$ hwclock --param-get bsm
The RTC parameter 0x2 is set to 0x1.
```

- We can set RTC BSM with:

```
target:~$ hwclock --param-set bsm=0x2
The RTC parameter 0x2 will be set to 0x2.
```

What BSM values mean translates to these values:

```
#define RTC_BSM_DISABLED   0
#define RTC_BSM_DIRECT     1
#define RTC_BSM_LEVEL      2
#define RTC_BSM_STANDBY    3
```

Tip

You should set BSM mode to DSM or LSM for RTC to switch to backup power source when the initial power source is not available. Check **RV-3028** RTC datasheet to read what LSM (Level Switching Mode) and DSM (Direct Switching Mode) actually mean.

DT representation for I²C RTCs: https://github.com/phytec/linux-phytec-imx/blob/v6.6.23-2.0.0-phy8/arch/arm64/boot/dts/freescale/imx93-phyboard-segin.dts#L173 or https://github.com/phytec/linux-phytec-imx/blob/v6.6.23-2.0.0-phy8/arch/arm64/boot/dts/freescale/imx93-phyboard-nash.dts#L122

7.11 USB Host Controller

The USB controller of the i.MX 93 SoC provides a low-cost connectivity solution for numerous consumer portable devices by providing a mechanism for data transfer between USB devices with a line/bus speed of up to 480 Mbps (HighSpeed 'HS'). The USB subsystem has two independent USB controller cores. Both cores are capable of acting as a USB peripheral device or a USB host, but on the phyBOARD-Segin/Nash i.MX 93 one of them is used as a host-only port (USB-A connector).

The unified BSP includes support for mass storage devices and keyboards. Other USB-related device drivers must be enabled in the kernel configuration on demand. Due to udev, all mass storage devices connected get unique IDs and can be found in `/dev/disk/by-id`. These IDs can be used in `/etc/fstab` to mount the different USB memory devices in different ways.

The OTG port provides an additional pin for over-current protection, which is not used on the phyBOARD-Segin/Nash i.MX 93. Since it's not used, the driver part is also disabled from within the device tree. In case

this pin is used, activate this over-current in the device tree and set the correct polarity (active high/low) according to the device specification. For the correct setup, please refer to the Kernel documentation under Linux/Documentation/devicetree/bindings/usb/ci-hdrc-usb2.txt.

DT representation for USB Host: https://github.com/phytec/linux-phytec-imx/blob/v6.6.23-2.0.0-phy8/arch/arm64/boot/dts/freescale/imx93-phyboard-segin.dts#L193 or https://github.com/phytec/linux-phytec-imx/blob/v6.6.23-2.0.0-phy8/arch/arm64/boot/dts/freescale/imx93-phyboard-nash.dts#L181

7.12 RS232/RS485

The phyBOARD-Nash i.MX 93 i.MX 93 SoC provides one RS232/RS485 serial port.

Warning

RS232 with HW flow control and RS485 are not working due to HW bug on the phyBOARD-Nash i.MX 93 PCB revision 1616.0

7.12.1 RS232

- Display the current settings of a terminal in a human-readable format:

```
target:~$ stty -a
```

- Configuration of the UART interface can be done with stty. For example:

```
target:~$ stty -F /dev/ttyLP6 115200 crtscts raw -echo
```

- With a simple echo and cat, basic communication can be tested. Example:

```
target:~$ echo 123 > /dev/ttyLP6
```

```
host:~$ cat /dev/ttyUSB2
```

The host should print out “123”.

7.12.2 RS485

Hint

Remember to use bus termination resistors of 120 Ohm at each end of the bus, when using longer cables.

For easy testing, look at the linux-serial-test. This tool is called the IOCTL for RS485 and sends a constant stream of data.

```
target:~$ linux-serial-test -p /dev/ttyLP6 -b 115200 --rs485 0
```

More information about the linux-serial-test tool and its parameters can be found here: linux-serial-test

The linux-serial-test will automatically set ioctls, but they can also be set manually with rs485conf.

You can show the current config with:

```
target:~$ rs485conf /dev/ttyLP6
```

You can show all options with:

```
target:~$ rs485conf /dev/ttyLP6 -h
```

Documentation for calling the IOCTL within c-code is described in the Linux kernel documentation: https://www.kernel.org/doc/Documentation/serial/serial-rs485.txt

The device tree representation for RS232 and RS485: https://github.com/phytec/linux-phytec-imx/blob/v6.6.23-2.0.0-phy8/arch/arm64/boot/dts/freescale/imx93-phyboard-nash.dts#L174

7.13 CAN FD

The phyBOARD-Segin/Nash i.MX 93 has one flexCAN interface supporting CAN FD. They are supported by the Linux standard CAN framework which builds upon the Linux network layer. Using this framework, the CAN interfaces behave like an ordinary Linux network device, with some additional features special to CAN. More information can be found in the Linux Kernel documentation: https://www.kernel.org/doc/html/latest/networking/can.html

- Use:

  ```
  target:~$ ip link
  ```

  to see the state of the interfaces. The CAN interface should show up as can0.

- To get information on can0, such as bit rate and error counters, type:

  ```
  target:~$ ip -d -s link show can0
  4: can0: <NOARP,UP,LOWER_UP,ECHO> mtu 16 qdisc pfifo_fast state UP mode DEFAULT group␣
  ↪default qlen 10
     link/can  promiscuity 0  allmulti 0 minmtu 0 maxmtu 0
     can state ERROR-ACTIVE (berr-counter tx 0 rx 0) restart-ms 0
           bitrate 500000 sample-point 0.875
           tq 25 prop-seg 37 phase-seg1 32 phase-seg2 10 sjw 1 brp 1
           flexcan: tseg1 2..96 tseg2 2..32 sjw 1..16 brp 1..1024 brp_inc 1
           flexcan: dtseg1 2..39 dtseg2 2..8 dsjw 1..4 dbrp 1..1024 dbrp_inc 1
           clock 40000000
           re-started bus-errors arbit-lost error-warn error-pass bus-off
           0          0          0          0          0          0         numtxqueues 1␣
  ↪numrxqueues 1 gso_max_size 65536 gso_max_segs 65535 tso_max_size 65536 tso_max_segs 65535␣
  ↪gro_max_size 65536 parentbus platform parentdev 443a0000.can
     RX:  bytes packets errors dropped  missed   mcast
              0       0      0       0       0       0
     TX:  bytes packets errors dropped carrier collsns
              0       0      0       0       0       0
  ```

The output contains a standard set of parameters also shown for Ethernet interfaces, so not all of these are necessarily relevant for CAN (for example the MAC address). The following output parameters contain useful information:

can0	Interface Name
NOARP	CAN cannot use ARP protocol
MTU	Maximum Transfer Unit
RX packets	Number of Received Packets
TX packets	Number of Transmitted Packets
RX bytes	Number of Received Bytes
TX bytes	Number of Transmitted Bytes
errors…	Bus Error Statistics

The CAN configuration is done in the systemd configuration file `/lib/systemd/network/can0.network`. For a persistent change of (as an example, the default bitrates), change the configuration in the BSP under `./meta-ampliphy/recipes-core/systemd/systemd-conf/can0.network` in the root filesystem and rebuild the root filesystem.

```
[Match]
Name=can0

[Can]
BitRate=500000
```

The bitrate can also be changed manually, for example, to make use of the flexible bitrate:

```
target:~$ ip link set can0 down
target:~$ ip link set can0 txqueuelen 10 up type can bitrate 500000 sample-point 0.75 dbitrate␣
↪4000000 dsample-point 0.8 fd on
```

You can send messages with cansend or receive messages with candump:

```
target:~$ cansend can0 123#45.67
target:~$ candump can0
```

To generate random CAN traffic for testing purposes, use cangen:

```
target:~$ cangen
```

`cansend --help` and `candump --help` provide help messages for further information on options and usage.

Device Tree CAN configuration of imx93-phyboard-segin.dts: https://github.com/phytec/linux-phytec-imx/blob/v6.6.23-2.0.0-phy8/arch/arm64/boot/dts/freescale/imx93-phyboard-segin.dts#L147 or https://github.com/phytec/linux-phytec-imx/blob/v6.6.23-2.0.0-phy8/arch/arm64/boot/dts/freescale/imx93-phyboard-nash.dts#L105

7.14 Audio on phyBOARD-Segin i.MX 93

On phyBOARD-Segin i.MX 93 the TI TLV320AIC3007 audio codec is used. It uses I2S for data transmission and I2C for codec control. The audio signals available are:

- Stereo LINE IN,
- Stereo LINE OUT,
- Output where D-Class 1W speaker can be connected

To check if your soundcard driver is loaded correctly and what the device is called, type for playback devices:

```
target:~$ aplay -L
```

Or type for recording devices:

```
target:~$ arecord -L
```

7.14.1 Alsamixer

To inspect the capabilities of your soundcard, call:

```
target:~$ alsamixer
```

You should see a lot of options as the audio-IC has many features you can experiment with. It might be better to open alsamixer via ssh instead of the serial console, as the console graphical effects are better. You have either mono or stereo gain controls for all mix points. "MM" means the feature is muted (both output, left & right), which can be toggled by hitting '**m**'. You can also toggle by hitting '<' for left and '>' for right output. With the **tab** key, you can switch between controls for playback and recording.

7.14.2 Restore default volumes

There are some default settings stored in `/var/lib/alsa/asound.state`. You can save your current alsa settings with:

```
target:~$ alsactl --file </path/to/filename> store
```

You can restore saved alsa settings with:

```
target:~$ alsactl --file </path/to/filename> restore
```

7.14.3 Playback

Run speaker-test to check playback availability:

```
target:~$ speaker-test -c 2 -t wav
```

To playback simple audio streams, you can use aplay. For example to play the ALSA test sounds:

```
target:~$ aplay /usr/share/sounds/alsa/*
```

To playback other formats like mp3 for example, you can use Gstreamer:

```
target:~$ gst-launch-1.0 playbin uri=file:/path/to/file.mp3
```

If Speaker volume it too low you can increase its volume with (values 0-3):

```
target:~$ amixer -c 0 sset Class-D 3
```

Hint

Speaker output is only mono so when stereo track is played only left channel will be played by speaker.

7.14.4 Capture

`arecord` is a command-line tool for capturing audio streams which use Line In as the default input source.

```
target:~$ arecord -t wav -c 2 -r 44100 -f S16_LE test.wav
```

Hint

Since playback and capture share hardware interfaces, it is not possible to use different sampling rates and formats for simultaneous playback and capture operations.

Device Tree Audio configuration: https://github.com/phytec/linux-phytec-imx/blob/v6.6.23-2.0.0-phy8/arch/arm64/boot/dts/freescale/imx93-phyboard-segin.dts#L62

7.15 Audio on phyBOARD-Nash i.MX 93

Warning

Due to HW bug Audio is broken on phyBOARD-Nash i.MX 93 PCB revision: 1616.0

To use audio with phyBOARD-Nash i.MX 93 an additional adapter for the Audio/Video connector is needed. The PEB-AV-10 (1531.1 revision) can be bought separately to the Kit. PEB-AV-10 is populated with a TI TLV320AIC3007 audio codec. Audio support is done via the I2S interface and controlled via I2C.

There is a 3.5mm headset jack with OMTP standard and an 8-pin header to connect audio devices with the AV-Connector. The 8-pin header contains a mono speaker, headphones, and line-in signals.

To check if your soundcard driver is loaded correctly and what the device is called, type for playback devices:

```
target:~$ aplay -L
```

Or type for recording devices:

```
target:~$ arecord -L
```

7.15.1 Alsamixer

To inspect the capabilities of your soundcard, call:

```
target:~$ alsamixer
```

You should see a lot of options as the audio-IC has many features you can experiment with. It might be better to open alsamixer via ssh instead of the serial console, as the console graphical effects are better. You have either mono or stereo gain controls for all mix points. “MM” means the feature is muted (both output, left & right), which can be toggled by hitting ‘**m**’. You can also toggle by hitting ‘<’ for left and ‘>’ for right output. With the **tab** key, you can switch between controls for playback and recording.

7.15.2 Restore default volumes

There are some default settings stored in `/var/lib/alsa/asound.state`. You can save your current alsa settings with:

```
target:~$ alsactl --file </path/to/filename> store
```

You can restore saved alsa settings with:

```
target:~$ alsactl --file </path/to/filename> restore
```

7.15.3 ALSA configuration

Our BSP comes with a ALSA configuration file `/etc/asound.conf`.

The ALSA configuration file can be edited as desired or deleted since it is not required for ALSA to work properly.

```
target:~$ vi /etc/asound.conf
```

To set PEB-AV-10 as output, set *playback.pcm* from "dummy" to "pebav10":

```
[...]

pcm.asymed {
        type asym
        playback.pcm "pebav10"
        capture.pcm "dsnoop"
}

[...]
```

If the sound is not audible change playback devices to the software volume control playback devices, set *playback.pcm* to the respective softvol playback device e.g. "softvol_pebav10". Use alsamixer controls to vary the volume levels.

```
[...]

pcm.asymed {
        type asym
        playback.pcm "softvol_pebav10"
        capture.pcm "dsnoop"
}

[...]
```

7.15.4 Pulseaudio Configuration

For applications using *Pulseaudio*, check for available sinks:

```
target:~$ pactl list short sinks
```

To select the output device, type:

```
target:~$ pactl set-default-sink <sink_number>
```

7.15.5 Playback

Run speaker-test to check playback availability:

```
target:~$ speaker-test -c 2 -t wav
```

To playback simple audio streams, you can use aplay. For example to play the ALSA test sounds:

```
target:~$ aplay /usr/share/sounds/alsa/*
```

To playback other formats like mp3 for example, you can use Gstreamer:

```
target:~$ gst-launch-1.0 playbin uri=file:/path/to/file.mp3
```

7.15.6 Capture

`arecord` is a command-line tool for capturing audio streams which use Line In as the default input source. To select a different audio source you can use `alsamixer`. For example, switch on *Right PGA Mixer Mic3R* and *Left PGA Mixer Mic3R* in order to capture the audio from the microphone input of the TLV320-Codec using the 3.5mm jack.

```
target:~$ amixer -c "sndpebav10" sset 'Left PGA Mixer Mic3R' on
target:~$ amixer -c "sndpebav10" sset 'Right PGA Mixer Mic3R' on
```

```
target:~$ arecord -t wav -c 2 -r 44100 -f S16_LE test.wav
```

Hint

Since playback and capture share hardware interfaces, it is not possible to use different sampling rates and formats for simultaneous playback and capture operations.

Device Tree Audio configuration: https://github.com/phytec/linux-phytec-imx/blob/v6.6.23-2.0.0-phy8/arch/arm64/boot/dts/freescale/imx93-phyboard-nash-peb-av-10.dtso#L56

7.16 Video

7.16.1 Videos with Gstreamer

One example video is installed by default in the BSP at */usr/share/qtphy/videos/*. Start the video playback with one of these commands:

```
target:~$ gst-launch-1.0 playbin uri=file:///usr/share/qtphy/videos/caminandes_3_llamigos_720p_
↪vp9.webm
```

- Or:

```
target:~$ gst-launch-1.0 -v filesrc location=/usr/share/qtphy/videos/caminandes_3_llamigos_720p_
↪vp9.webm ! decodebin name=decoder decoder. ! videoconvert ! waylandsink
```

- Or:

```
target:~$ gst-play-1.0 /usr/share/qtphy/videos/caminandes_3_llamigos_720p_vp9.webm --videosink␣
↪waylandsink
```

7.17 Display

The **phyBOARD-Segin** i.MX 93 supports PEB-AV-02 with 7'' `edt,etm0700g0edh6` parallel display with capacitive touchscreen. Device-tree overlay for the aforementioned display is enabled in `/boot/bootenv.txt` by default!

The **phyBOARD-Nash** i.MX 93 needs additional adapter to support 10'' `edt,etml1010g3dra` LVDS display with capacitive touchscreen. The PEB-AV-10 (1531.1 revision) can be bought separately to the Kit. Device-tree overlay for the aforementioned adapter is enabled in `/boot/bootenv.txt` by default!

7.17.1 Qt Demo

With the `phytec-qt6demo-image`, Weston starts during boot. Our Qt6 demo application named "qtphy" can be stopped with:

```
target:~$ systemctl stop qtphy
```

- To start the demo again, run:

  ```
  target:~$ systemctl start qtphy
  ```

- To disable autostart of the demo, run:

  ```
  target:~$ systemctl disable qtphy
  ```

- To enable autostart of the demo, run:

  ```
  target:~$ systemctl enable qtphy
  ```

- Weston can be stopped with:

  ```
  target:~$ systemctl stop weston
  ```

Note

The Qt demo must be closed before Weston can be closed.

7.17.2 Backlight Control

If a display is connected to the PHYTEC board, you can control its backlight with the Linux kernel sysfs interface. All available backlight devices in the system can be found in the folder /sys/class/backlight. Reading the appropriate files and writing to them allows you to control the backlight.

Note

Some boards with multiple display connectors might have multiple backlight controls in /sys/class/backlight. For example: backlight0 and backlight1

- To get, for example, the maximum brightness level (max_brightness) execute:

  ```
  target:~$ cat /sys/class/backlight/backlight/max_brightness
  ```

  Valid brightness values are 0 to <max_brightness>.

- To obtain the current brightness level, type:

```
target:~$ cat /sys/class/backlight/backlight/brightness
```

- Write to the file brightness to change the brightness:

```
target:~$ echo 0 > /sys/class/backlight/backlight/brightness
```

  turns the backlight off for example.

  For documentation of all files, see https://www.kernel.org/doc/Documentation/ABI/stable/sysfs-class-backlight.

The device tree of PEB-AV-02 can be found here: https://github.com/phytec/linux-phytec-imx/blob/v6.6.23-2.0.0-phy8/arch/arm64/boot/dts/freescale/imx93-phyboard-segin-peb-av-02.dtso

The device tree of PEB-AV-10 can be found here: https://github.com/phytec/linux-phytec-imx/blob/v6.6.23-2.0.0-phy8/arch/arm64/boot/dts/freescale/imx93-phyboard-nash-peb-av-10.dtso

7.18 Power Management

7.18.1 CPU Core Frequency Scaling

The CPU in the i.MX 93 SoC is able to scale the clock frequency and the voltage. This is used to save power when the full performance of the CPU is not needed. Unlike i.MX8 M family the i.MX 93 doesn't support *Dynamic* Voltage and Frequency Scaling (DVFS), but has the support of basic **Voltage and Frequency Scaling (VFS)**. The board can be put into these modes:

- nominal (ND),
- overdrive (OD),
- Low Drive (LD) and
- Low Drive (LD) with Software Fast Frequency Change (SWFFC).

Mode	CPU freq	DDR data rate	VDD_SOC
OverDrive (OD)	1.7 GHz	3733 MT/s	900mV
NominalDrive (ND)	1.4 GHz	1866 MT/s	850mV
LowDrive (LD)	900 MHz	1866 MT/s	800mV
LowDrive (LD) with SWFFC	900 MHz	625 MT/s	800mV

The i.MX 93 BSP supports the VFS feature. The Linux kernel provides a LPM driver that allows setting VDD_SOC, CPU freq and DDR speed.

Note

Low-cost i.MX 93 SoC variants such as parts numbers NXP IMX9301/IMX9302 do not support VFS features. Those SoCs always run in LowDrive (LD) mode. Hence, the Linux LPM driver is disabled automatically for SoMs with such SoCs.

- To put the device in **OverDrive (OD)** mode type:

```
target:~$ echo 0 > /sys/devices/platform/imx93-lpm/mode
```

- To put the device in **NominalDrive (ND)** mode type:

```
target:~$ echo 1 > /sys/devices/platform/imx93-lpm/mode
```

- To put the device in **LowDrive (LD)** mode type:

```
target:~$ echo 2 > /sys/devices/platform/imx93-lpm/mode
```

- To put the device in **LowDrive (LD)** mode with the lowest DDR speed with SWFFC type:

```
target:~$ echo 3 > /sys/devices/platform/imx93-lpm/mode
```

- To check the current CPU frequency type:

```
target:~$ mhz
```

- To check the current mode and DDR frequency type:

```
target:~$ cat /sys/devices/platform/imx93-lpm/mode
```

- To check the current VDD_SOC type:

```
target:~$ cat /sys/kernel/debug/regulator/regulator_summary
```

For more detailed information about the LPM driver and modes, refer to the NXPs documentation: https://docs.nxp.com/bundle/AN13917/page/topics/low_power_mode_use_cases.html

7.18.2 CPU Core Management

The i.MX 93 SoC can have multiple processor cores on the die. The i.MX 93, for example, has 2 ARM Cores which can be turned on and off individually at runtime.

- To see all available cores in the system, execute:

```
target:~$ ls /sys/devices/system/cpu  -1
```

- This will show, for example:

```
cpu0/
cpu1/
cpufreq/
[...]
```

  Here the system has two processor cores. By default, all available cores in the system are enabled to get maximum performance.

- To switch off a single-core, execute:

```
target:~$ echo 0 > /sys/devices/system/cpu/cpu1/online
```

  As confirmation, you will see:

```
[  110.505012] psci: CPU1 killed (polled 0 ms)
```

  Now the core is powered down and no more processes are scheduled on this core.

- You can use top to see a graphical overview of the cores and processes:

```
target:~$ htop
```

- To power up the core again, execute:

```
target:~$ echo 1 > /sys/devices/system/cpu/cpu1/online
```

7.18.3 Suspend to RAM

The phyCORE-i.MX 93 supports basic suspend and resume. Different wake-up sources can be used. Suspend/resume is possible with:

```
target:~$ echo mem > /sys/power/state
#resume with pressing on/off button
```

To wake up with serial console run

```
target:~$ echo enabled > /sys/class/tty/ttyLP0/power/wakeup
target:~$ echo mem > /sys/power/state
```

Device can be put into suspend and waken-up with PEB-EVAL-01 S2 button

To wake up with RTC alarm check: *RTC Wakealarm*

7.19 Thermal Management

7.19.1 U-Boot

The previous temperature control in the U-Boot was not satisfactory. Now the u-boot has a temperature shutdown to prevent the board from getting too hot during booting. The temperatures at which the shutdown occurs are identical to those in the kernel.

The individual temperature ranges with the current temperature are displayed in the boot log:

```
CPU:   Industrial temperature grade (-40C to 105C) at 33C
```

7.19.2 Kernel

The Linux kernel has integrated thermal management that is capable of monitoring SoC temperatures, reducing the CPU frequency, driving fans, advising other drivers to reduce the power consumption of devices, and – worst-case – shutting down the system gracefully (https://www.kernel.org/doc/Documentation/thermal/sysfs-api.txt).

This section describes how the thermal management kernel API is used for the i.MX 93 SoC platform. The i.MX 9 has internal temperature sensors for the SoC.

- The current temperature can be read in millicelsius with:

```
target:~$ cat /sys/class/thermal/thermal_zone0/temp
```

- You will get, for example:

```
49000
```

There are two trip points registered by the imx_thermal kernel driver. These differ depending on the CPU variant. A distinction is made between Commercial, Industrial and Extended Industrial.

	Commercial	Industrial	Extended Industrial
passive (warning)	85°C	95°C	115°C
critical (shutdown)	90°C	100°C	120°C

(see kernel sysfs folder `/sys/class/thermal/thermal_zone0/`)

The kernel thermal management uses these trip points to trigger events and change the cooling behavior. The following thermal policies (also named thermal governors) are available in the kernel: Step Wise and Power Allocator. The default policy used in the BSP is step_wise.

Tip

If the value of the SoC temperature in the sysfs file temp reaches *trip_point_1*, the board immediately shuts down to avoid any heat damage. If this doesn't meet you expectations, an external supervisor circuit that starts the module again with X_ONOFF signal when the temperature drops below a selected trip point can be implemented

Note

The actual values of the thermal trip points may differ since we mount CPUs with different temperature grades.

7.19.3 PWM Fan

A PWM fan can be connected to the phyBOARD-Nash i.MX 93 connector X48 (label FAN).

Afterwards, a PWM fan overlay needs to be activated, otherwise PWM fan won't be recognized.

```
target:~$ vi /boot/bootenv.txt
```

The bootenv.txt file should look like this (it can also contain other devicetree overlays!):

```
overlays=imx93-phyboard-nash-pwm-fan.dtbo
```

The changes will be applied after a reboot:

```
target:~$ reboot
```

For further information about devicetree overlays, read the *device tree* chapter.

The SoC only contains one temperature sensor which is already used by the thermal frequency scaling. The fan thus can not be controlled by the kernel. We use lmsensors with hwmon for this instead. lmsensors reads the temperature periodically and adjusts output PWM duty-cycle accordingly. By default, temperature threshold for PWM fan to activate is set to 60°C.

The settings can be configured in the configuration file:

```
/etc/fancontrol
```

Fan control is started by a systemd service during boot. This can be disabled with:

```
target:~$ systemctl disable fancontrol
```

7.20 Watchdog

The PHYTEC i.MX 93 modules include a hardware watchdog that is able to reset the board when the system hangs. The watchdog is started on default in U-Boot with a timeout of 60s. So even during early kernel start, the watchdog is already up and running. The Linux kernel driver takes control over the watchdog and makes sure that it is fed. This section explains how to configure the watchdog in Linux using systemd to check for system hangs and during reboot.

7.20.1 Watchdog Support in systemd

Systemd has included hardware watchdog support since version 183.

- To activate watchdog support, the file system.conf in `/etc/systemd/` has to be adapted by enabling the options:

  ```
  RuntimeWatchdogSec=60s
  ShutdownWatchdogSec=10min
  ```

RuntimeWatchdogSec defines the timeout value of the watchdog, while *ShutdownWatchdogSec* defines the timeout when the system is rebooted. For more detailed information about hardware watchdogs under systemd can be found at http://0pointer.de/blog/projects/watchdog.html. The changes will take effect after a reboot or run:

```
target:~$  systemctl daemon-reload
```

7.21 bbnsm Power Key

The X_ONOFF pin connected to the ON/OFF button can be pressed long (for 5 seconds) to trigger Power OFF without SW intervention or used to wake up the system out of suspend. With the *bbnsm_pwrkey* driver, the KEY_POWER event is also reported to userspace when the button is pressed. On default, systemd is configured to ignore such events. The function of Power OFF without SW intervention are not configured. Triggering a power off with systemd when pushing the ON/OFF button can be configured under `/etc/systemd/logind.conf` and set using:

```
HandlePowerKey=poweroff
```

7.22 PXP

The i.MX 93 SoC contains an PiXel Pipeline (PXP). The PXP combines the following into a single processing engine:

- Scaling
- Color Space Conversion (CSC)
- Secondary Color Space Conversion (CSC2)
- Rotation

and thus minimizes the memory footprint required for the display pipeline. How to use the PXP with Gstreamer and Wayland check the *How to Use PXP in GStreamer and Wayland* (AN13829) Application note from NXP.

7.23 On-Chip OTP Controller (OCOTP_CTRL) - eFuses

The i.MX 93 provides one-time programmable fuses to store information such as the MAC address, boot configuration, and other permanent settings ("On-Chip OTP Controller (OCOTP_CTRL)" in the i.MX 93 Reference Manual). The following list is an abstract from the i.MX 93 Reference Manual and includes some useful registers in the OCOTP_CTRL (at base address 0x47510000):

Name	Bank	Word	Memory offset at 0x47510000	Description
BOOT_CF		3	0 0x60	boot fuse settings
BOOT_CF		3	1 0x64	boot fuse settings
BOOT_CF		3	2 0x68	boot fuse settings
BOOT_CF		3	3 0x6c	boot fuse settings
MAC1_AD	39	3	0x4ec	contains lower 32 bits of ENET0 MAC address
MAC1/2_A	39	4	0x4f0	contains upper 16 bits of ENET0 MAC address and the lower 16 bits of ENET1 MAC address
MAC2_AD	39	5	0x4f4	contains upper 32 bits of ENET1 MAC address

A complete list and a detailed mapping between the fuses in the OCOTP_CTRL and the boot/mac/... configuration are available in the section "Fuse Map" of the i.MX 93 Security Reference Manual.

7.23.1 Reading Fuse Values in uBoot

MAC1_ADDR:

```
u-boot=> fuse read 39 3
```

7.23.2 Reading Fuse Values in Linux

To access the content of the fuses in Linux NXP provides the NVMEM_IMX_OCOTP module. All fuse content of the memory-mapped shadow registers is accessible via sysfs:

```
target:~$ hexdump /sys/devices/platform/soc\@0/47510000.efuse/fsb_s400_fuse0/nvmem
```

7.23.3 Burning MAC addresses

Let's say we want to burn the following MAC addresses:

MAC1	12:34:56:78:90:Aa
MAC2	Bb:Cc:Dd:Ee:Ff:D0

We would execute this in u-boot:

```
u-boot=> fuse prog 39 3 0x567890Aa
u-boot=> fuse prog 39 4 0xFfD01234
u-boot=> fuse prog 39 5 0xBbCcDdEe
```

7.23.4 Burning Boot Fuses

Warning

Fuses can only be written once! You can brick your board easily by burning the wrong boot configuration. It cannot be reversed!

Which fuse bank/word should be used to program the BOOT_CFGX can be checked in *i.MX 93 Applications Processor Reference Manual* attached spreadsheet named **i.MX93_Fusemap.xlsx**.

These values should be written to the BOOT_CFG0, which can be read/written from fuses on Bank 3, Word 0.

Boot Device	BOOT_CFG0
eMMC	0x20020002
SD Card	0x20000103

To set internal fuses to boot from eMMC one can program them with:

```
u-boot=> fuse prog 3 0 0x20020002
```

In this example we:

- set the Boot_Mode to 0b0010 (eMMC) with BOOT_CFG0[3:0],
- set the eMMC Bus width to 0b01 (8 bit) with BOOT_CFG0[18:17]
- set the BT_FUSE_SEL (Boot fuses already programmed) bit with BOOT_CFG0[29]

Make sure you set the right bits by reading the **Boot Fusemap** chapter in *i.MX 93 Applications Processor Reference Manual*.

7.24 TPM

The **phyBOARD-Nash** i.MX 93 is equipped with a Trusted Platform Module (TPM) that provides hardware-based security functions.

Here are some useful examples to work with the TPM

Generate 4-byte random value with TPM2 tools:

```
target:~$ tpm2_getrandom --hex 4
```

Generate 4-byte random value with OpenSSL tools:

```
target:~$ openssl rand -engine libtpm2tss --hex 4
```

Generate RSA private key and validate its contents:

```
target:~$ openssl genrsa -engine libtpm2tss -out /tmp/priv_key 512
Engine "tpm2tss" set.
target:~$ openssl rsa -check -in /tmp/priv_key -noout
RSA key ok
target:~$ cat /tmp/priv_key
```

(continues on next page)

(continued from previous page)

```
-----BEGIN PRIVATE KEY-----
MIIBVQIBADANBgkqhkiG9w0BAQEFAASCAT8wggE7AgEAAkEAxsvmcbxjwuKnYeuZ
2AVBmuLvYyqF/LpYOD3IB/v+YvEolxdGGmjiFLECU6xZ1j3+dIt4Y1zbcKS1OcWT
I8mbSwIDAQABAkBoy8wrYNhmP/1kzUJIclznPYJckGoZlFI1M7xjGSA9H1xDK6if
5g5CYCHPrbBp8e0mEokPRZoihxxzGTxGPiahAiEA/7OYMOpVZ5SD3YcRsWcQlkWI
MOSPUYg6vxvGG9xp4FcCIQDHB01RoHr+qXJwxIu3/3oQAUBI4ACJ4JRp0KelwhC0
LQIhANJzSvg/dak5l8pU55/99q3nbm7nPnnZSJiP0F6P62gjAiEAjf7qrfMF7Uyt
RkEjwbl2t5Z868FNARGGMVxZT4x+aF0CIGxlmP2pL8xFu1bWB282LSedqZUdQwel
Lxi7+svb2+uJ
-----END PRIVATE KEY-----
```

Note

Do NOT share your private RSA keys if you are going to use these keys for any security purposes.

Generate RSA public key and validate its contents:

```
target:~$ openssl rsa -in /tmp/test_key -pubout -out /tmp/pub_key
writing RSA key
target:~$ openssl pkey -inform PEM -pubin -in /tmp/pub_key -noout
target:~$ cat /tmp/pub_key
-----BEGIN PUBLIC KEY-----
MFwwDQYJKoZIhvcNAQEBBQADSwAwSAJBAMbL5nG8Y8Lip2HrmdgFQZri72Mqhfy6
WDg9yAf7/mLxKJcXRhpo4hSxAlOsWdY9/nSLeGNc23CktTnFkyPJm0sCAwEAAQ==
-----END PUBLIC KEY-----
```

Device tree TPM configuration can be found here: https://github.com/phytec/linux-phytec-imx/blob/v6.6.23-2.0.0-phy8/arch/arm64/boot/dts/freescale/imx93-phyboard-nash.dts#L151

CHAPTER

EIGHT

I.MX 93 M33 CORE

In addition to the Cortex-A55 cores, there is a Cortex-M33 Core as MCU integrated into the i.MX 93 SoC. Our Yocto-Linux-BSP runs on the A55-Cores and the M33 Core can be used as a secondary core for additional tasks using bare-metal firmware. Both cores have access to the same peripherals and thus peripheral usage needs to be limited either in the M33 Core's firmware or the devicetree for the Linux operating system.

Our Yocto-BSP contains pre-built firmware examples for M33 Core from NXP.

This section describes how to run pre-built M33 Core firmware examples on phyBOARD-Segin/Nash i.MX 93.

8.1 Running M33 Core Examples

There are two ways to run the M33 Core firmware examples, from U-Boot bootloader and from Remoteproc subsystem within a running Linux.

To receive debug messages start your favorite terminal software (e.g. Minicom, Tio, or Tera Term) on your host PC and configure it for 115200 baud, 8 data bits, no parity, and 1 stop bit (8n1) with no handshake.

On phyBOARD-Segin/Nash i.MX 93 an external "USB TTL to serial adapter" is required. Adapter's I/O pins should be able to operate at 3.3V voltage levels.

Connect external "USB TTL to serial adapter" signals to the *X16* connector on the board according to the following table:

USB-TTL adapter pins	X16 signal	X16 pin
RXD	X_UART2_TX	5
TXD	X_UART2_RX	8
GND	GND	4

8.1.1 Running Examples from U-Boot

To load firmware examples using the U-Boot bootloader, the `bootaux` command can be used:

1. Prepare an SD Card with our Yocto-BSP
2. Stop the autoboot by pressing any key
3. List available M33 Core firmware examples on the first partition of SD Card:

```
u-boot=> ls mmc 1
```

Note

Available firmware examples start with `imx93-11x11-evk_m33_TCM_*` and end with `*.bin`. Examples come from NXP's Yocto layer meta-imx and are selected based on compatibility with phyBOARD-Segin/Nash i.MX 93 hardware.

1. Load desired firmware example:

```
u-boot=> fatload mmc 1 ${loadaddr} <firmware.bin>
u-boot=> cp.b ${loadaddr} 0x201e0000 ${filesize}
u-boot=> run prepare_mcore
u-boot=> bootaux 0x1ffe0000 0
## Starting auxiliary core addr = 0x1FFE0000...
```

The program's output should appear on the M33 Core's debug UART.

8.1.2 Running Examples from Linux using Remoteproc

Remoteproc is a module that allows you to control the M33 Core from Linux during runtime. Firmware examples for M33 Core can be loaded and the execution started or stopped within Linux. To use Remoteproc a devicetree overlay needs to be set:

Edit the `bootenv.txt` file located in the `/boot` directory on the target by adding `imx93-phycore-rpmsg.dtbo`:

```
overlays=imx93-phyboard-segin-peb-av-02.dtbo imx93-phycore-rpmsg.dtbo
```

Restart the target and execute in U-Boot:

```
u-boot=> run prepare_mcore
```

Firmware examples `*.elf` files for the M33 Core can be found under `/lib/firmware`. List available firmware examples:

```
target:~$ ls /lib/firmware/*.elf
```

To load the firmware, type:

```
target:~$ echo /lib/firmware/<firmware>.elf > /sys/class/remoteproc/remoteproc0/firmware
target:~$ echo start > /sys/class/remoteproc/remoteproc0/state
```

To load a different firmware, the M33 Core needs to be stopped:

```
target:~$ echo stop > /sys/class/remoteproc/remoteproc0/state
```

Note

The samples found in `/lib/firmware` on the target come from NXP's Yocto layer meta-imx and are selected based on compatibility with phyBOARD-Segin/Nash i.MX 93 hardware.

Some firmware examples from NXP require additional Linux kernel modules to be loaded.

For example, when loading `imx93-11x11-evk_m33_TCM_rpmsg_lite_str_echo_rtos.elf` firmware, one requires corresponding `imx_rpmsg_tty` module to be loaded:

```
target:~$ modprobe imx_rpmsg_tty
```

This exposes an RPMsg endpoint as a virtual TTY at `/dev/ttyRPMSG30`. Now it is possible to send messages from A55 Core to M33 Core by typing:

```
target:~$ echo "PHYTEC" > /dev/ttyRPMSG30
```

Observing M33 Core debug UART should result in the following output:

```
RPMSG String Echo FreeRTOS RTOS API Demo...

Nameservice sent, ready for incoming messages...
Get Message From Master Side : "PHYTEC" [len : 6]
```