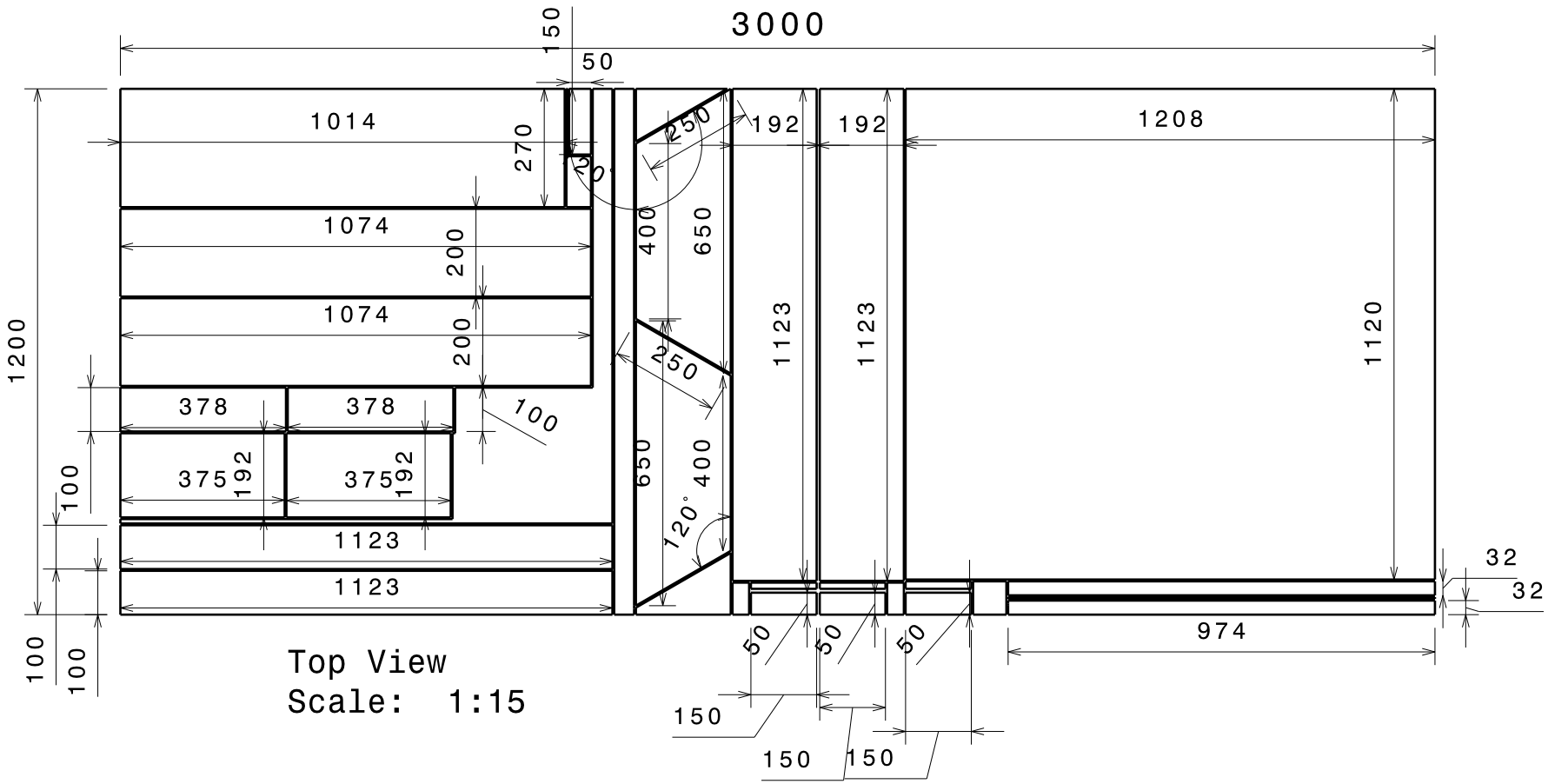

Projeto da disciplina de Projeto Integrador 2		Perfilômetro			
		DRAWING TITLE			
DRAWN BY Antonino	DATE 04/06/2019				
CHECKED BY XXX	DATE XXX	SIZE A4	DRAWING NUMBER Part12		REV X
DESIGNED BY Antonino	DATE 04/06/2019	SCALE 1:15	WEIGHT(kg) 0,00		SHEET 1/1