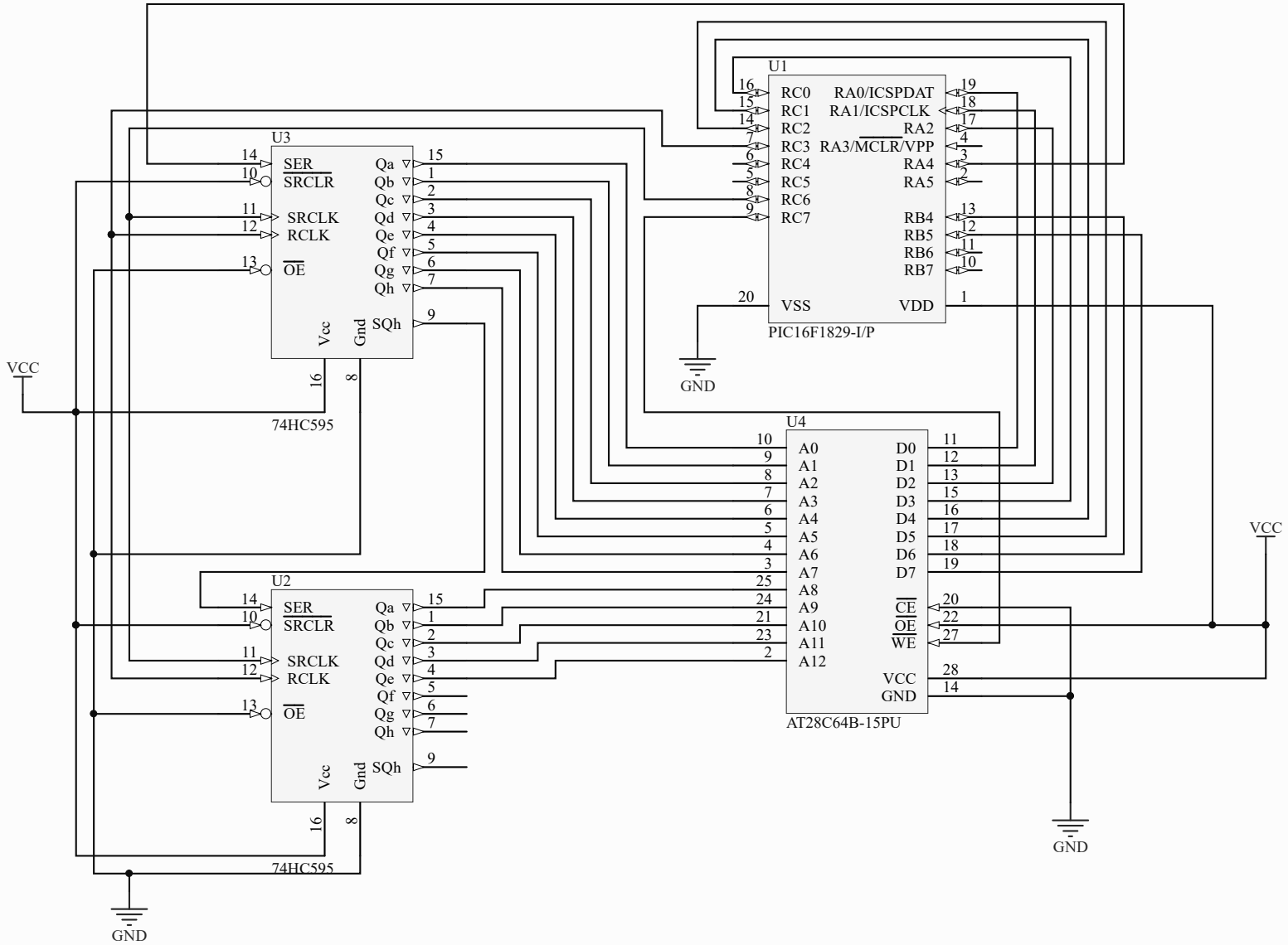

Title		
EEPROM Programmer Wiring		
Size: A	Number	Revision
Date: 4/25/2021	Sheet of	
File: eeprom.SchDoc	Drawn By: Jacob Picardat	