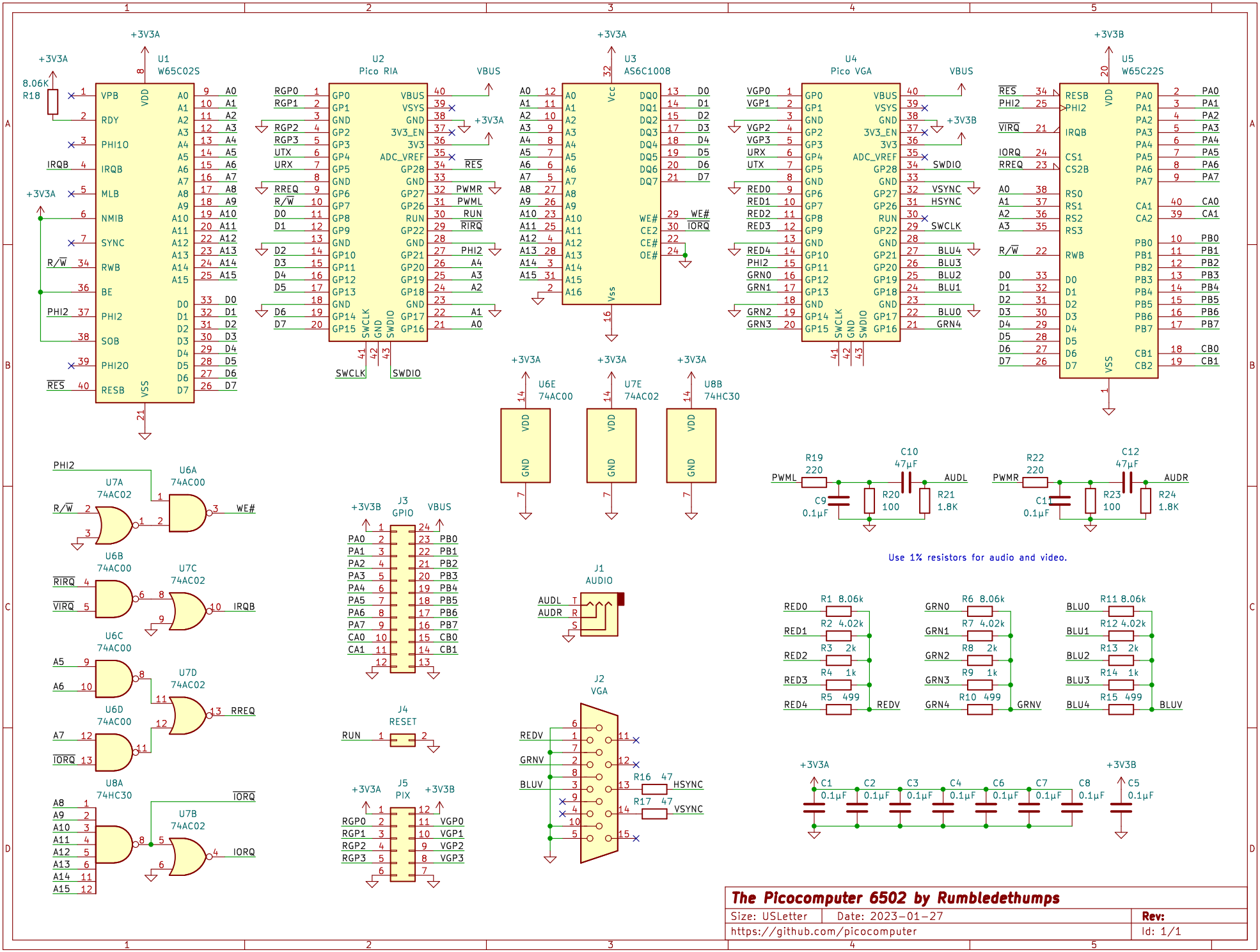

The Picocomputer 6502 by Rumbledethumps

Size: USLetter	Date: 2023-01-27	Rev:
https://github.com/picocomputer		Id: 1/1