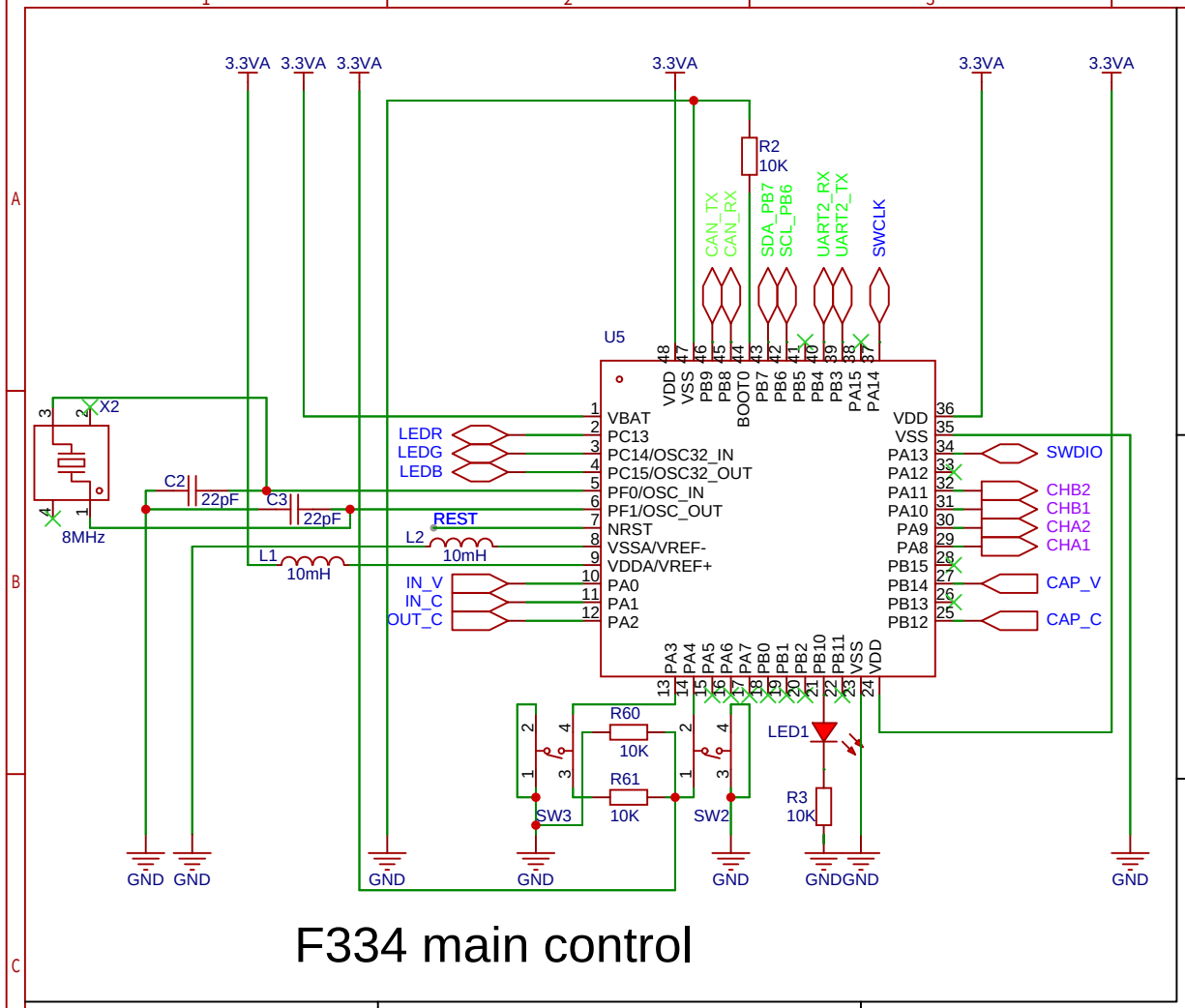


F334 main control

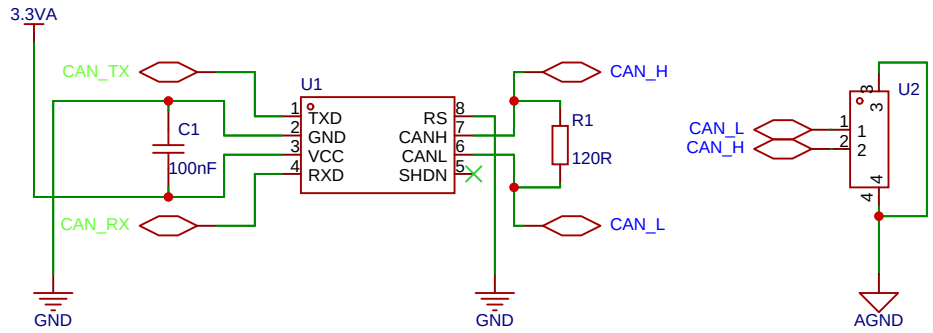


CAN controller

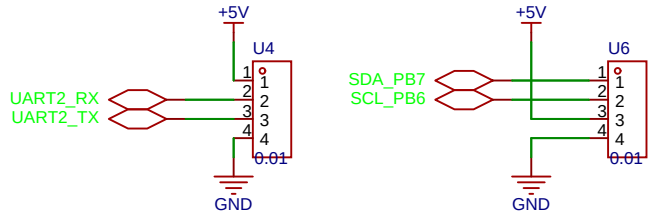


port

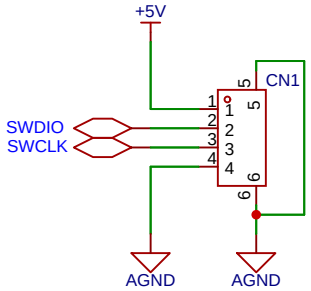


serial wire debug

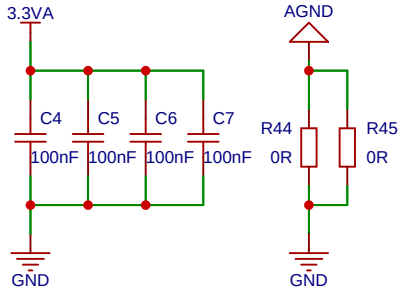


power

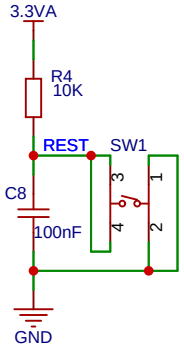


program reset

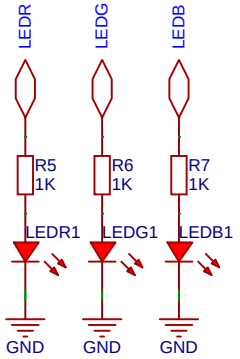


indicator LED

| | | | |
|---|---|---|---|
| Schematic | 超级电容管理_3 | Update Date | 2024-03-24 |
| | | Create Date | 2024-03-23 |
| Page | 主控 | Part Number | |
| Drawed | super_capacitor_control | | |
| Reviewed | | | |
| | | VER | SIZE |
| | | PAGE 1 OF 3 | |
| 嘉立创EDA | | V1.0 | B |
| | | 嘉立创EDA | |