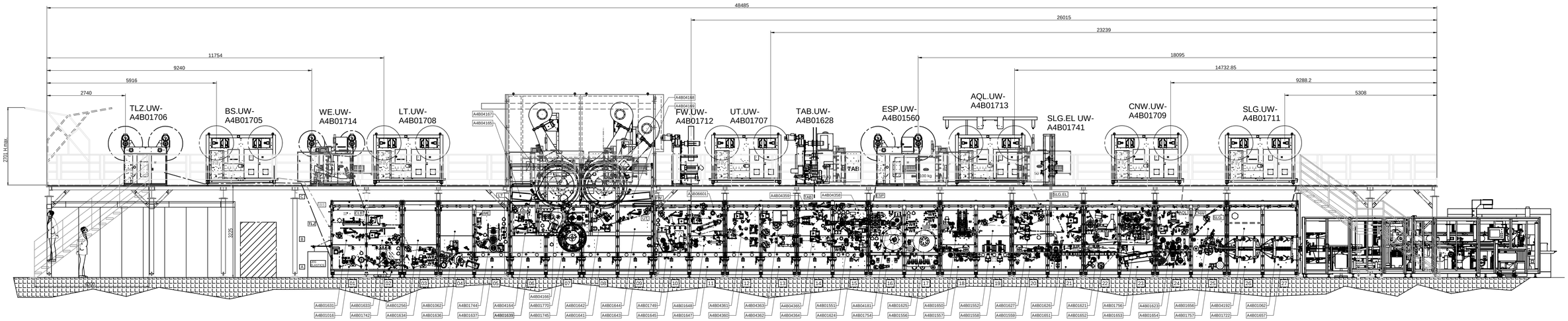

SECTION "A-A"

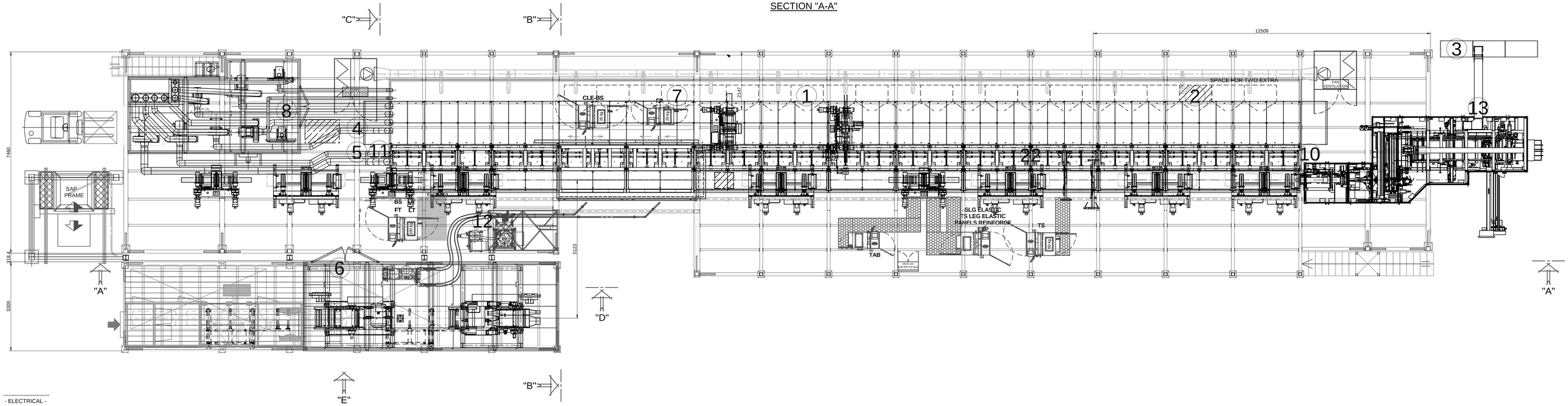

- ELECTRICAL -
---

1 Converting machine main power supply.
400VAC-50Hz 3ph+N+PE.
Consumption = 330 A.
Size of the main breaker = 1.000 Amps.

1 Converting machine aux. power supply.
230VAC-50Hz 1ph+PE / max. 10 Amps (main cabinet internal lighting).

2 Herrmann equipment.
400VAC-50Hz 3ph+N+PE.
Estimated power consumption = 6 KVA, approx. 8,7A.
Size of line fuses = max. 16 Amps.

2 Herrmann equipment.
230VAC-50Hz 1ph+PE / max. 10 Amps (electrical cabinet internal lighting).

3 Optima equipment.
400VAC-50Hz 3ph+PE (without neutral)
Estimated power consumption = 15 KVA.

3 Optima equipment.
230VAC-50Hz 1ph+PE / max. 10 Amps (electrical cabinet internal lighting).

4 Ambient lighting (workshop)
230VAC-50Hz 1ph+PE / max. 10 Amps.

5 Ambient lighting (illumination of converting machine modules)
230VAC-50Hz 1ph+PE / max. 10 Amps.

6 Ambient lighting (sound-house) - Mills room
230VAC-50Hz 1ph+PE / max. 10 Amps.

7 Fans cabinet power supply
400VAC-50Hz 3ph+N+PE.
Consumption = 340 A.
Size of the main breaker = 1.000 Amps.

8 Ambient lighting (sound-house) - Fans room
230VAC-50Hz 1ph+PE / max. 10 Amps.

- PNEUMATICAL -

- Converting machine.
10-11 No. 2 air pressure inlet (both end of the machine) : pipe connection 1 inch.
12 No. 1 air pressure inlet for SAP unit : pipe connection 1/2 inch.

13 Optima equipment.
No. 1 air pressure inlet : size of connection 1 inch.

- WATER -

- Converting machine.
22 No. 1 water inlet (standing gathers folding table) : pipe connection diam. 8 mm.

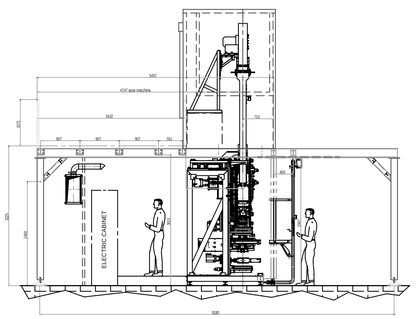

SECTION "B-B"

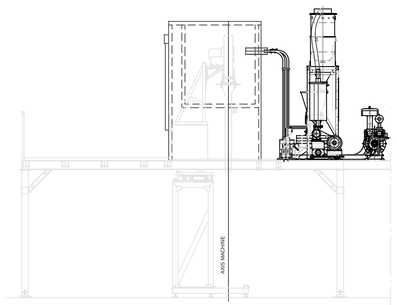

VIEW "C"

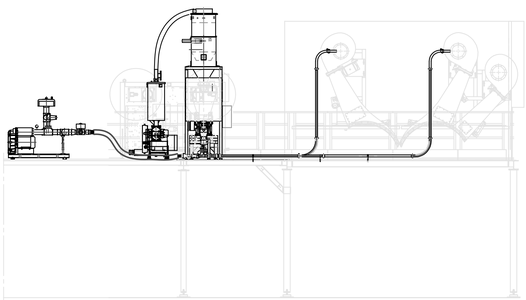

VIEW "D"

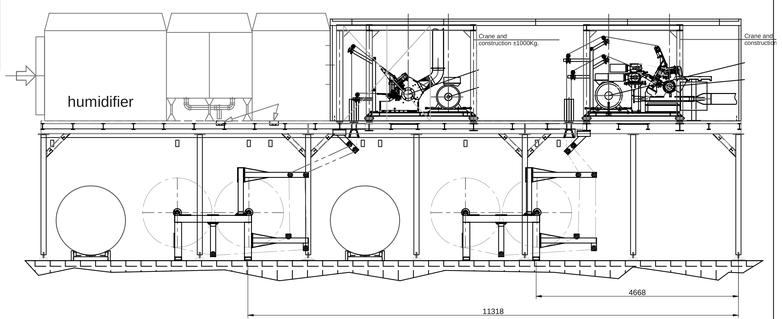

VIEW "E"

gem GOM SPA MACHINERY FOR THE PAPER INDUSTRY - PRINT - OFFAMMENTO DEL TIRO - VIA DELLA CHIESA, 1 - 20010 CORNAREDO (MI) - ITALY	TESTO AGGIUNTIVO	STATO Rilasciato	SCALA 1:50	FOGLIO 1	
		PESO 0.0	PROGETTISTA 127 Bressanelli Luca	MODIFICATO DA zavalist	
	CLIENTE -	SIMILE A	DATA CREAZIONE 30/6/2006 10:25:21 AM	DATA ULTIMA MODIFICA 05/19/08 04:59:39 PM	
ESCLUSIVA PROPRIETÀ TERZA. VIETATO COPIARE O RIPRODURRE SENZA ESPRESSA AUTORIZZAZIONE DELLA GOM SPA ELEVATA RESPONSABILITÀ	DESCRIZIONE LAYOUT PETER PAN 2		CODICE C0BT060896M1		