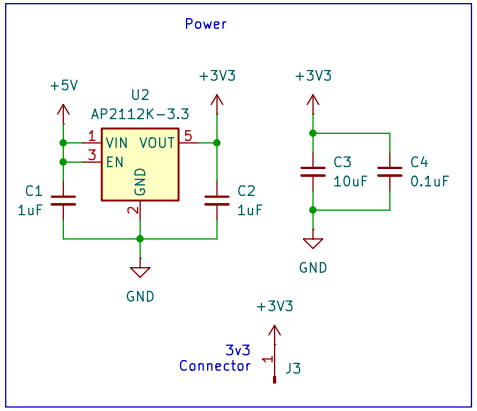

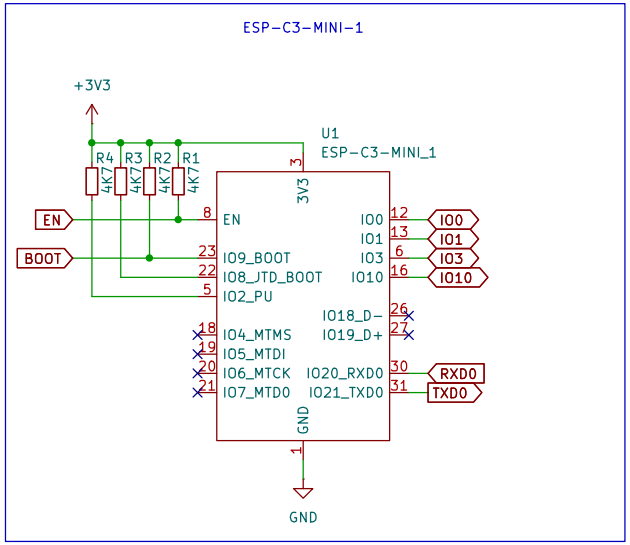

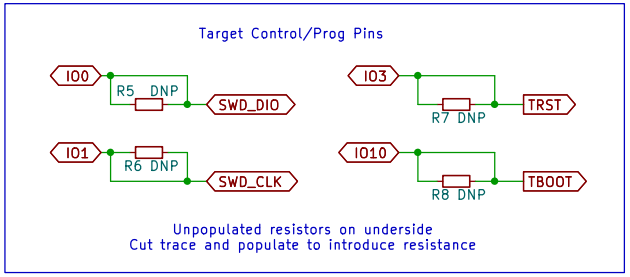

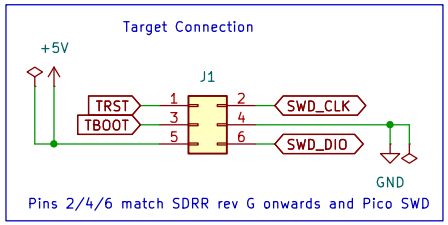

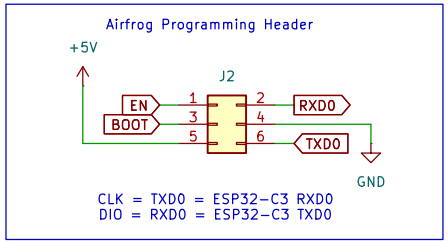

(c) Piers Finlayson 2025
piers.rocks

Sheet: /
File: airfrog rev b.kicad_sch

Title: airfrog

Size: A4	Date: 2025-08-15	**Rev: B**
KiCad E.D.A. 9.0.4		Id: 1/1