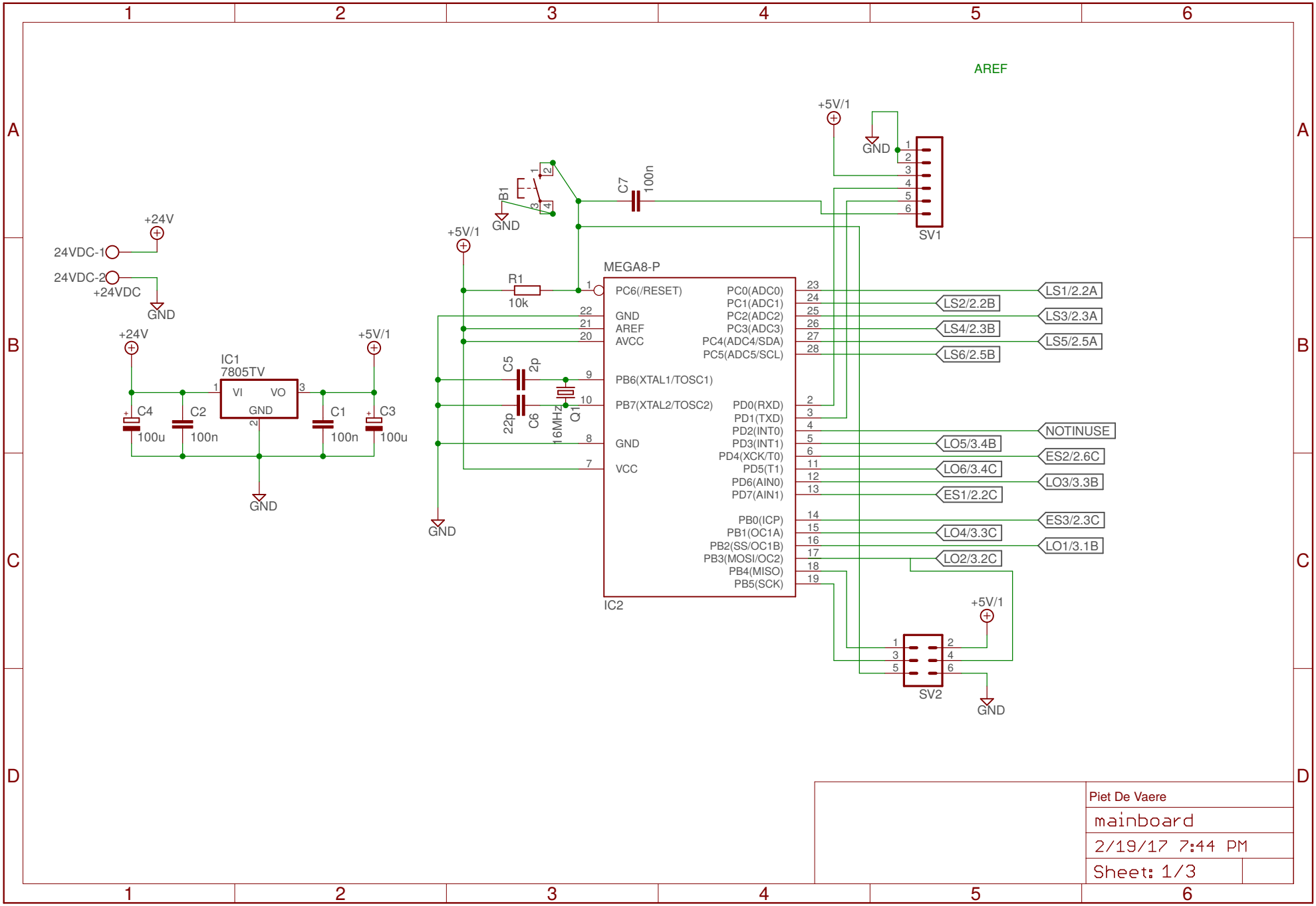
AREF
+24V
24VDC-1
24VDC-2
+24VDC
GND
IC1
7805TV
VI
VO
GND
C4
100u
C2
100n
C1
100n
C3
100u
+5V/1
B1
C7
100n
R1
10k
MEGA8-P
PC6(/RESET)
GND
AREF
AVCC
PB6(XTAL1/TOSC1)
PB7(XTAL2/TOSC2)
GND
VCC
C5
2p
22p
C6
16MHz
Q1
PC0(ADC0)
PC1(ADC1)
PC2(ADC2)
PC3(ADC3)
PC4(ADC4/SDA)
PC5(ADC5/SCL)
PD0(RXD)
PD1(TXD)
PD2(INT0)
PD3(INT1)
PD4(XCK/T0)
PD5(T1)
PD6(AIN0)
PD7(AIN1)
PB0(ICP)
PB1(OC1A)
PB2(SS/OC1B)
PB3(MOSI/OC2)
PB4(MISO)
PB5(SCK)
IC2
SV1
SV2
LS1/2.2A
LS2/2.2B
LS3/2.3A
LS4/2.3B
LS5/2.5A
LS6/2.5B
NOTINUSE
LO5/3.4B
ES2/2.6C
LO6/3.4C
LO3/3.3B
ES1/2.2C
ES3/2.3C
LO4/3.3C
LO1/3.1B
LO2/3.2C
Piet De Vaere
mainboard
2/19/17 7:44 PM
Sheet: 1/3

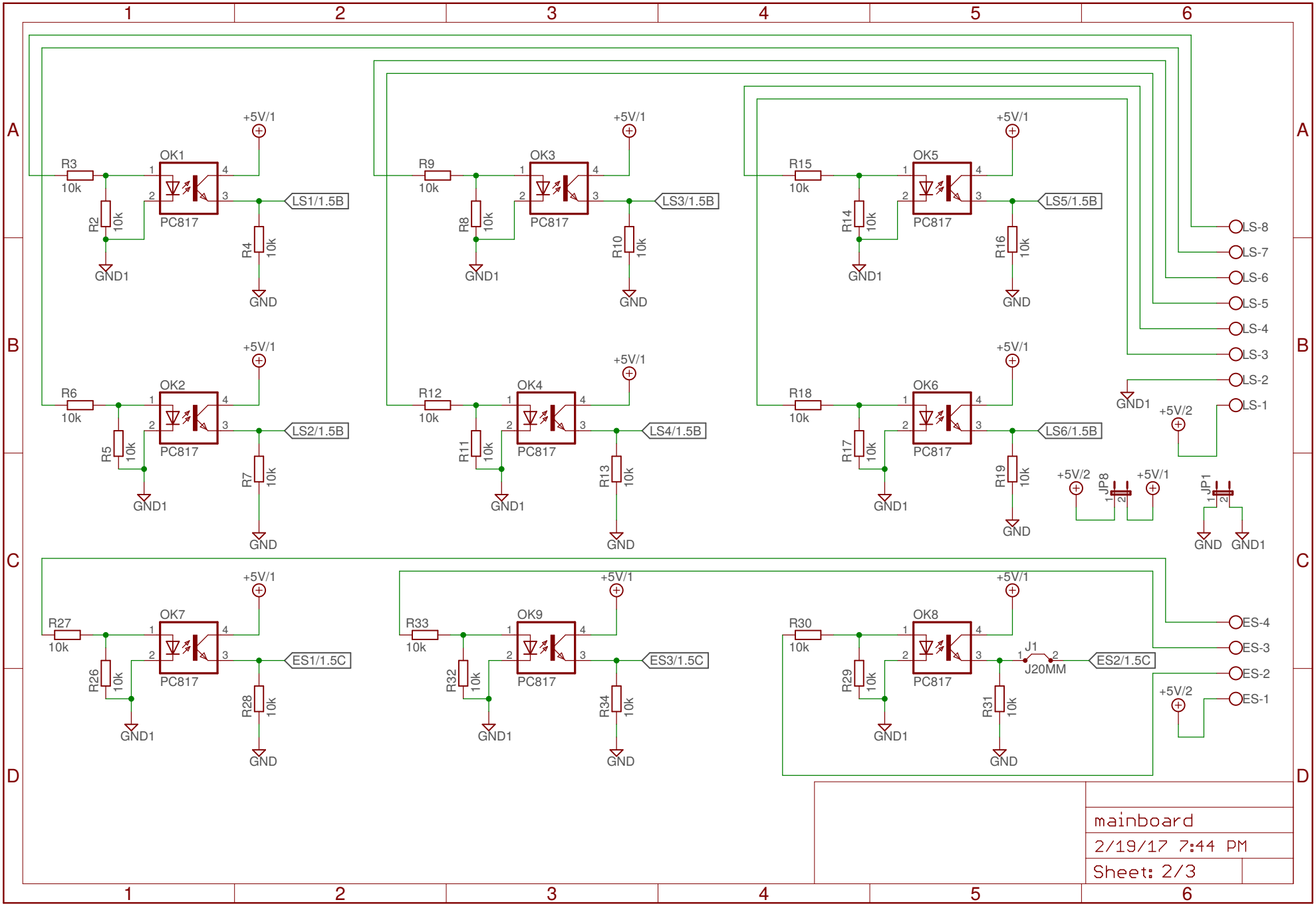
OK1
OK2
OK3
OK4
OK5
OK6
OK7
OK8
OK9
PC817
R3
R2
R4
R6
R5
R7
R9
R8
R10
R12
R11
R13
R15
R14
R16
R18
R17
R19
R27
R26
R28
R33
R32
R34
R30
R29
R31
10k
+5V/1
GND1
GND
LS1/1.5B
LS2/1.5B
LS3/1.5B
LS4/1.5B
LS5/1.5B
LS6/1.5B
ES1/1.5C
ES2/1.5C
ES3/1.5C
LS-8
LS-7
LS-6
LS-5
LS-4
LS-3
LS-2
LS-1
ES-4
ES-3
ES-2
ES-1
+5V/2
JP8
JP1
J1
J20MM
mainboard
2/19/17 7:44 PM
Sheet: 2/3

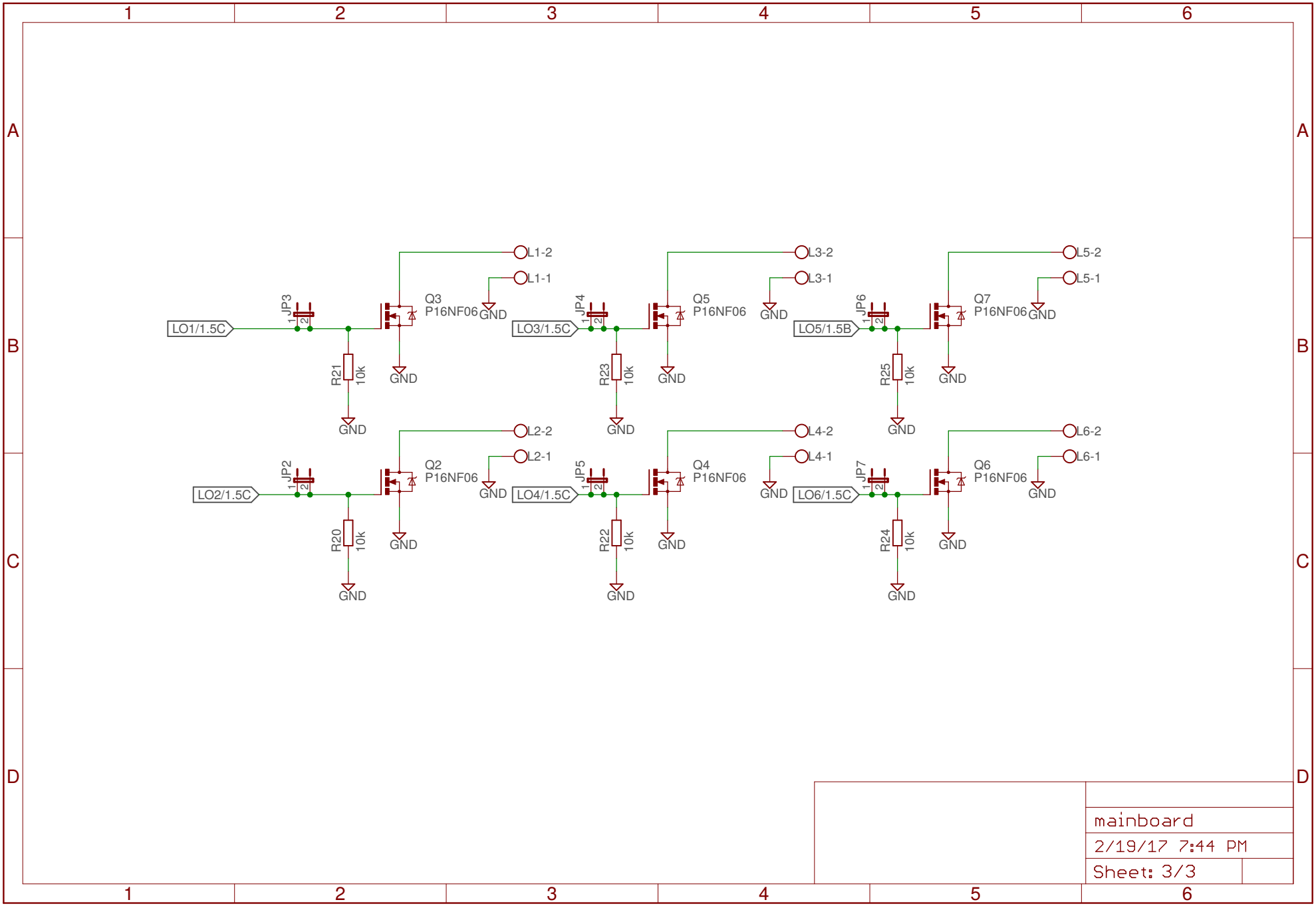
LO1/1.5C
JP3
R21
10k
Q3
P16NF06
L1-2
L1-1
GND
LO2/1.5C
JP2
R20
10k
Q2
P16NF06
L2-2
L2-1
LO3/1.5C
JP4
R23
10k
Q5
P16NF06
L3-2
L3-1
LO4/1.5C
JP5
R22
10k
Q4
P16NF06
L4-2
L4-1
LO5/1.5B
JP6
R25
10k
Q7
P16NF06
L5-2
L5-1
LO6/1.5C
JP7
R24
10k
Q6
P16NF06
L6-2
L6-1
mainboard
2/19/17 7:44 PM
Sheet: 3/3