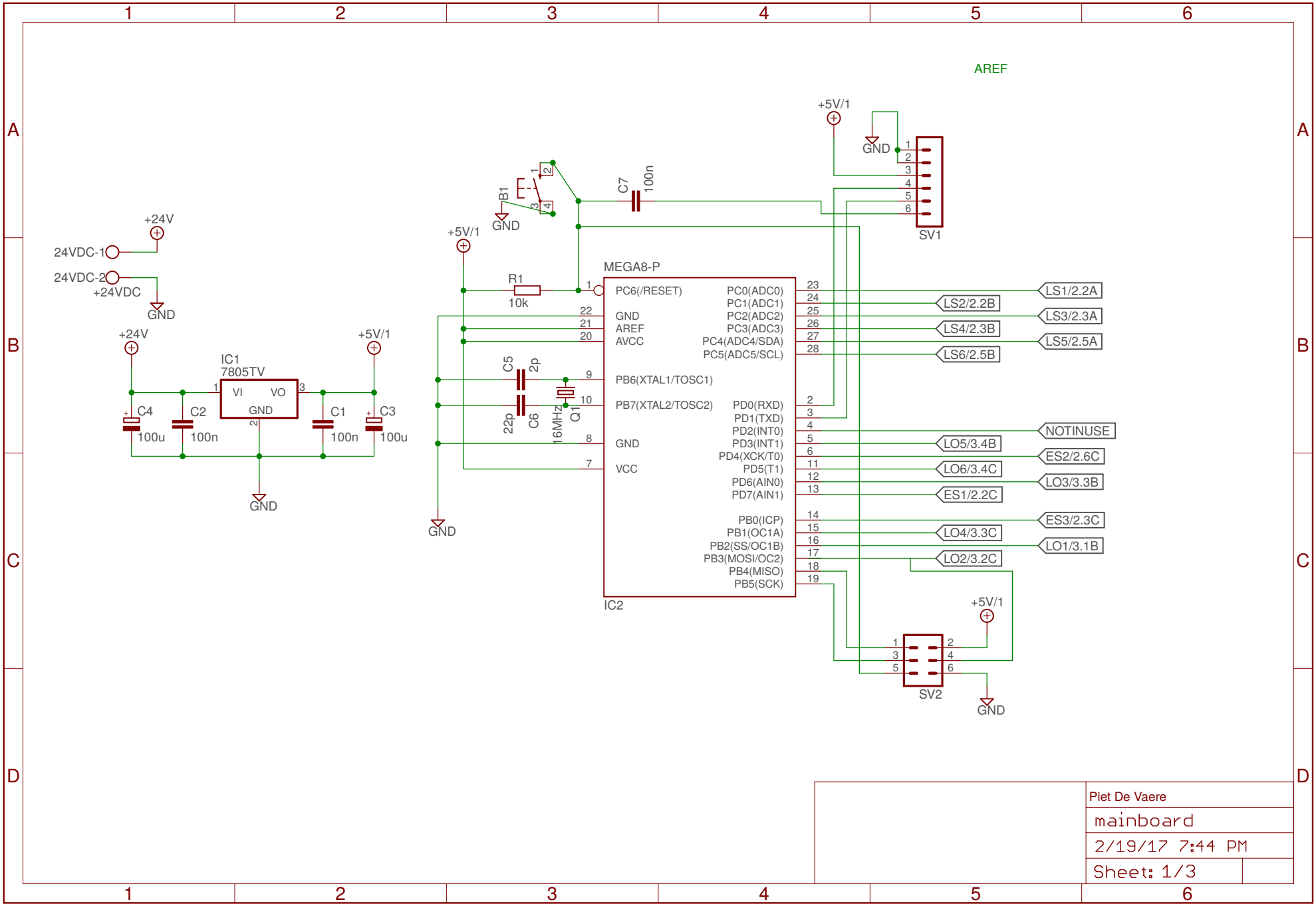

Piet De Vaere

mainboard

2/19/17 7:44 PM

Sheet: 1/3