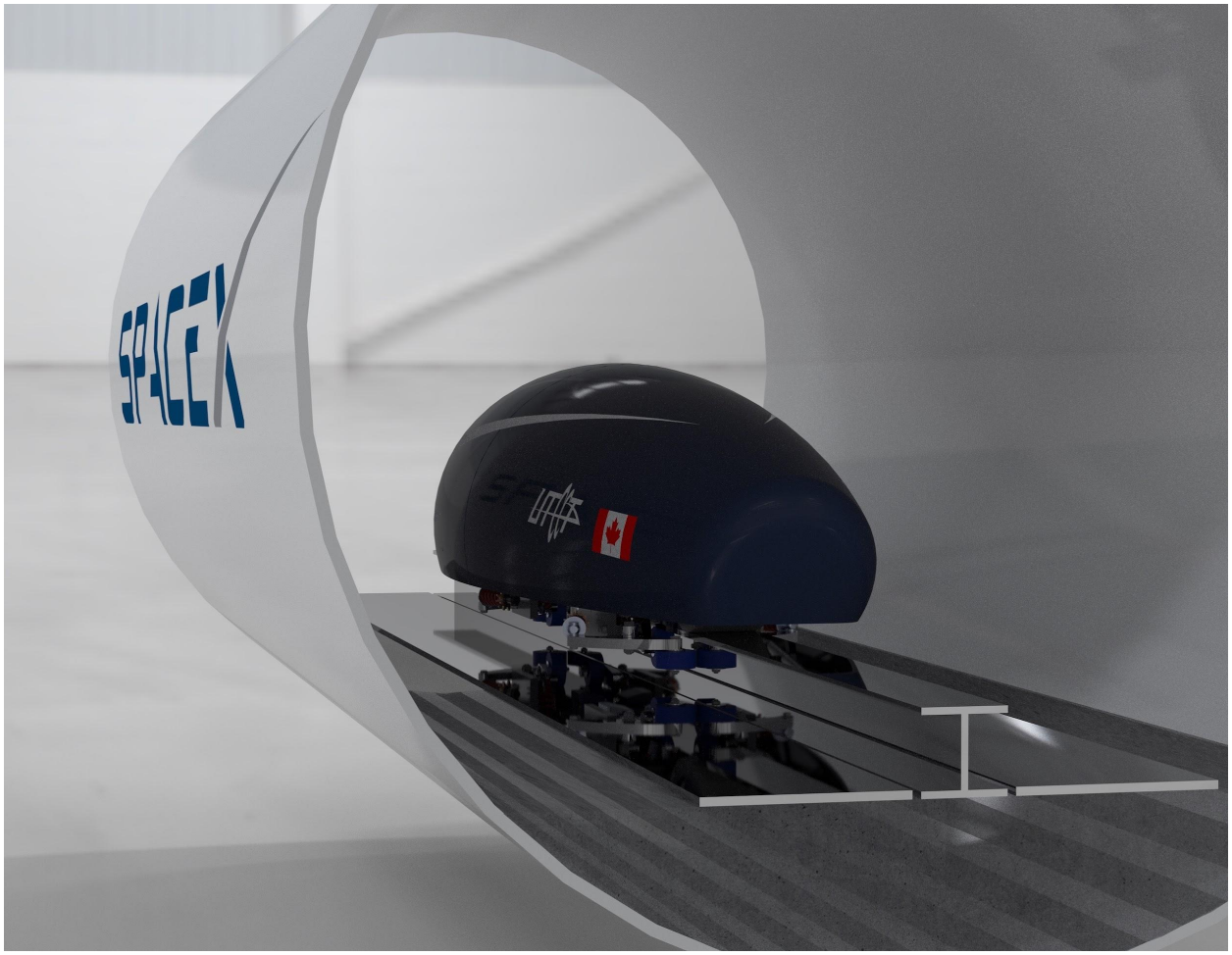

Pod I Intent to Demonstrate

European Hyperloop Competition 2021

University of Toronto Hyperloop Team

December 13, 2020

TABLE OF CONTENTS

INTRODUCTION **5**
UTHT and Members 5
POD I 5

INTEGRATION OF VARIOUS RELEVANT SUBSYSTEMS **7**
Structure System 7
Propulsion System 7
Stability System 7
Braking Subsystem 8
Energy System 8
Electronics System 9

STRUCTURES **10**
General Overview 10
Safety 13

PROPULSION **15**
General Overview 15
Front Wheel Assembly 16
Rear Wheel Assembly 17
Safety 19

BRAKING **21**
General Overview 21
Safety 23

STABILITY **24**
General Overview 24
Lateral Mechanism 24
Clamping Suspension Mechanism 25
Safety 27

ENERGY SYSTEMS **30**
General Overview 30
HV Power System 30
LV Power System 30
Energy Systems Integration 31
Energy Systems Safety 32

ELECTRONICS & SOFTWARE **34**
General Overview 34

Sensor System 35
Sensor Integration 35
Sensor System Safety 36
Communication System 37
Internal Communication 37
External Communication 38
Communication Safety 39
Control System 40
High Level Control System 40
Low Level System 41
Braking System 42
Propulsion System 43
Control Systems Safety 43
Controls Systems Safety-Critical Software 44

APPENDIX 47

Appendix AES: Energy Systems Detailed Description 47
LV Power System 47
LV Battery System 48
LV Power Distribution System 50
HV Power System 52
HV Battery System 53
Inverter Pre-Charge System 56
Inverter Cooling System 58
Charging System 63

Appendix AE: Electronics & Software Detailed Info 66
AE1: Primary and Auxiliary Sensors 66
AE1.1 Primary Sensors 66
AE1.2 Auxiliary Sensors 72
AE1.3 Microcontrollers & Master Computer 73
AE2: Complete Wiring Diagrams for Sensor Integration 75
AE2.1 Printed Circuit Board #1 Wiring Diagram 75
AE2.2 Printed Circuit Board #2 Wiring Diagram 77
AE2.3 Printed Circuit Board #3 Wiring Diagram 78
AE3: Complete Detailed Testing Procedure 79
AE4: MCP2515 CANBUS Connection to PM100DX 80
AE5: PM100DX Inverter Startup Sequence 82

INTRODUCTION

UTHT and Members

The University of Toronto's Hyperloop Team (UTHT) is an engineering design team consisting of more than 200 members mostly from the various engineering disciplines at the University of Toronto. UTHT's mission is to develop world-class talent at the intersection of business and engineering that contributes to the advancement of high speed transportation - this has led it to develop work on its first pod (Pod I). With funding from the University of Toronto's Faculty of Engineering and industry sponsors, the manufacturing and assembly of Pod I is underway with an expected completion in early 2021.The team responsible for Pod I is listed below.

Team Captain	Juan Egas*
Chief Mechanical Engineer	Hamza Arshad
Propulsion Lead I	Javad Siahkamari
Propulsion Lead II	Hongchen Wang
Braking Lead	Anton Liu
Stability Lead	Fernando Estrada
Structures Lead I	Jovan Phull
Structures Lead II	Phil Cuvin
Chief Electrical Engineer	Sasha Rudolf
Energy Systems Lead	Anaqi Muhamad Afendi
Electronics Lead I	Urmilkumar Modi
Electronics Lead II	Orest Cobani
Software Lead	Davendra Seunarine
Six Sigma Lead	George Su

* Juan Egas will be UTHT's representative in contact with the EHW committee.

POD I

Pod's major subsystems and components have all been designed on a CAD platform with some starting the physical machining and sourcing of parts necessary in early 2020. Pod's physical development is occurring mainly on the University of Toronto's campus - this includes manufacturing of small, machinable parts at the university's machine shop. It is expected that subsystems will be able to assemble the pod on campus in early 2021, following COVID-19 guidelines outlined by the University of Toronto's Faculty of Engineering.

Pod I is a precursor to UTHT's Pod II which will utilize a fully functional, non-contacting propulsion system (ie. hovering/contactless). For this reason, Pod I's main objective is to demonstrate a functioning hyperloop pod system with integrated subsystems that can be adopted to a more advanced Pod II - the development of this pod is also underway. Other objectives of Pod I include to:

- understand how to create a better stability system at high speeds by taking sensor measurements of the current system's performance
- create an efficient energy system design and eventually reiterate to create an energy dense system in the next pod
- demonstrate that this technology can be scaled up for human transportation.

UTHT's Pod I can be divided into six subsystems: structures, propulsion, braking, stability, energy systems, and electronics. These will be discussed in the sections that follow. Figure 1 illustrates the pod and its associated subsystems.

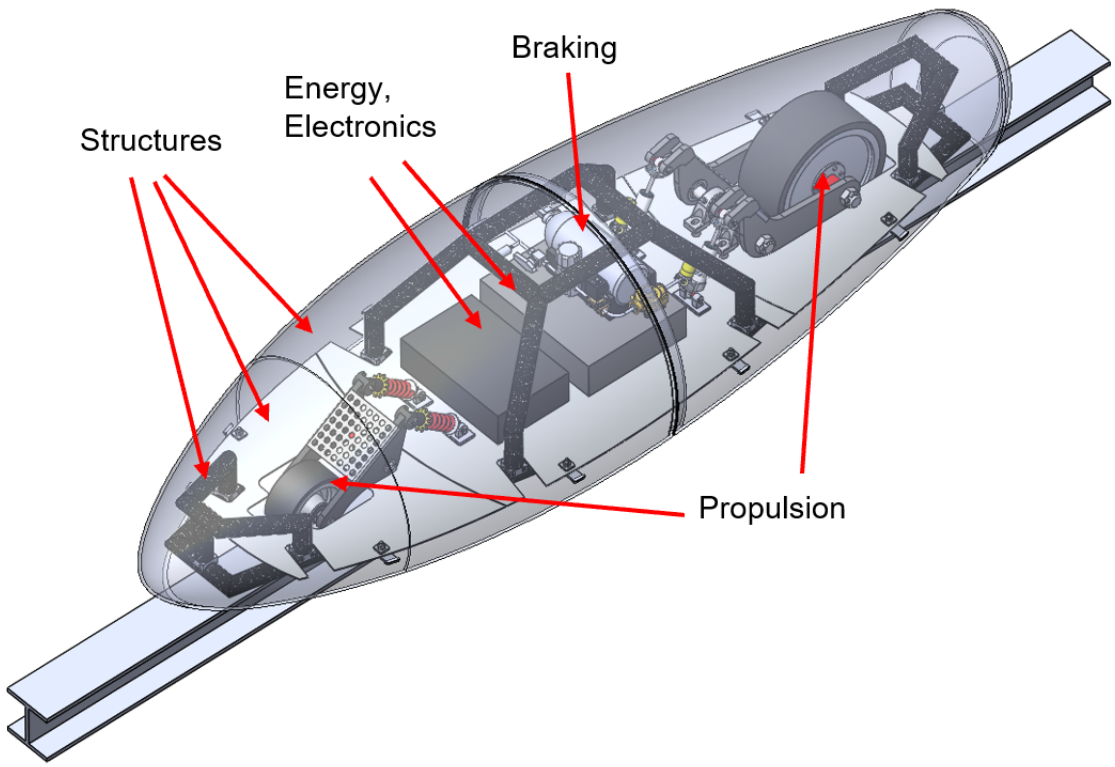

Figure 1: Isometric view of Pod I with subsystems (stability system not shown, located on the bottom of the pod)

INTEGRATION OF VARIOUS RELEVANT SUBSYSTEMS

Structure System

The structure system is responsible for both the pod's shell and its frame. All components of the other subsystems are mounted on the frame, which is split into two subcomponents: the sheet metal base and carbon fiber tube backbone. The structural components were designed to allow sufficient space for other components, while avoiding the risk of comprising aerodynamics. The aerodynamic shell covers and aims to protect all components from any external (mainly aerodynamics) forces.

Propulsion System

The propulsion system's components are designed to fit within the confines of the geometry developed by the structures team, encouraging weight savings. The motor at the rear of the pod sits on the metal base as low as possible to ensure that the center of mass of the pod is as close to the track as possible. Additionally the braking system integrates into the propulsion system via two pairs of braking pads placed at the center of the pod responsible for bringing the pod to a stop at the end of each run as well as in the case of any emergency brakings.

The electric motor operates on a 3-phase AC current. This is supplied by a set of lithium ion batteries whose DC current is converted to 3-phase AC via an inverter, which is also responsible for drive frequency control. The aforementioned mechanisms are conducted by the energy system integration into the propulsion system. For optimal and safe operation, the pod's vertical and lateral distance from the track, its spatial orientation, and the motor temperature are monitored during the run. This is done via placing a set of sensors in close proximity to the wheels for distance monitoring, a gyroscopic sensor for the pod's spatial orientation, and feeding the motor temperature profile to the controls which is all done by working with the electronics system.

Stability System

The pod operates on a bilateral stability system: two pairs of wheels run along the bottom of the top flange of the track's I-beam and are situated at the front and back ends of the pod. This clamping system is responsible for vertical stability and uses shocks to mitigate the effects of any vertical accelerations. Additionally, two pairs of wheels also at the front and back of the pod run along the web of the track's I-beam. This second set is responsible for the lateral stability and prevents yaw and roll. These wheels as well as their respective suspension systems are classified under the Stability System and are integral in the propulsion of the pod as they mitigate energy losses and help in stabilizing the pod.

Braking Subsystem

Two pairs of braking pads are located to the left and right of the pod's center which pneumatically lift the pod for the pads to make contact with the track and stop the pod at the end of the runs and in the case of emergency stops.

Electronics system connects solenoid valves and pressure transducers to the main control board and the energy system supplies the power needed to open the solenoid valve. Sensors send instructions to electronics whether to open or close the solenoid valve and help to monitor pressure inside the system for any anomalies.

Structures system mounts braking components to keep the system rigidity. Braking also depends on the Stability system to keep the appropriate operational gap between the brake pads and the I beam flanges.

Energy System

The energy system will be used to power the electronics and the pods onboard motor. It is made up of 2 power systems: high voltage (HV) Power and low voltage (LV) Power systems. Both systems are equipped with batteries to provide power to their respective systems.The HV power system will be used to provide power to the inverter and motor. The LV power system will be used to power the pods electronics and communications systems. Both the LV and HV batteries will be removed from the pod for charging, and they will be plugged into the charging system. The charging system will require a main power outlet capable of handling at least 750W.

Propulsion system operates on a max 52kW continuous power electric motor, but for the EHW demonstration we will be running it at up to 15kW only. The motor uses a 3-phase AC current fed by lithium ion battery packs. The DC current drawn from the batteries in the HV power system is run through an inverter which converts it to 3-phase AC. The inverter is also responsible for drive frequency control because it converts the DC voltage to the 3-phase AC required by the motor. Both the battery pack and the inverter fall under the Energy system which is therefore closely integrated into propulsion.

The inverter controls and input for desired drive frequency are handled by an arduino which interfaces with the inverter via CAN BUS. This arduino is part of the Electronics system and the control is performed through software. Therefore the HV power system requires the software and electronics sub-system to operate. They are interconnected, and the software and electronic control systems are what will allow us to control the operation of the HV power system. The low voltage power system does not rely on any other systems to operate.

Electronics System

For the electric motor to operate at optimal performance conditions, the drive frequency should be controlled and monitored; this is done by the Electronics system. Run initiation, braking, and emergency stops at pre-planned positions and based on the sensory system data are also conducted by the electronics system. Various metrics involved in the propulsion of the pod such as height, temperature, and pod's spatial orientation are closely monitored by the system controls. The sensing system recording and measuring these metrics is provided for by the electronics system. Pod propulsion requires the lateral and vertical distance from the track data in order to make sure they fall within the safety margin obtained by vibrational analysis. For this, sensors are installed on the pod front and rear sections measuring the distance from the track both laterally and vertically. Moreover, a set of gyroscopic sensors are installed at the center of the pod in order to provide spatial awareness. Lastly, temperature sensors feed the motor temperature profile motor to the controls system during the run.

STRUCTURES

General Overview

The structures system is responsible for the design, material selection, simulation and manufacturing, and integration of three components of the pod: (1) the shell, (2) the frame, (3) a carrier for the entire pod. (1) and (2) integrated is shown in Figure ST1. All material selection of the components was assessed using CES EduPack Eco 3, the design and CAD work was conducted on SolidWorks, while all simulations are to be run on ANSYS 2019 R2 and 2020. The general goal of the Structures team is to minimize the mass of the components without compromising the pod strength, which was primarily achieved throughout the material selection process and reduction of unnecessary weight in the design stage.

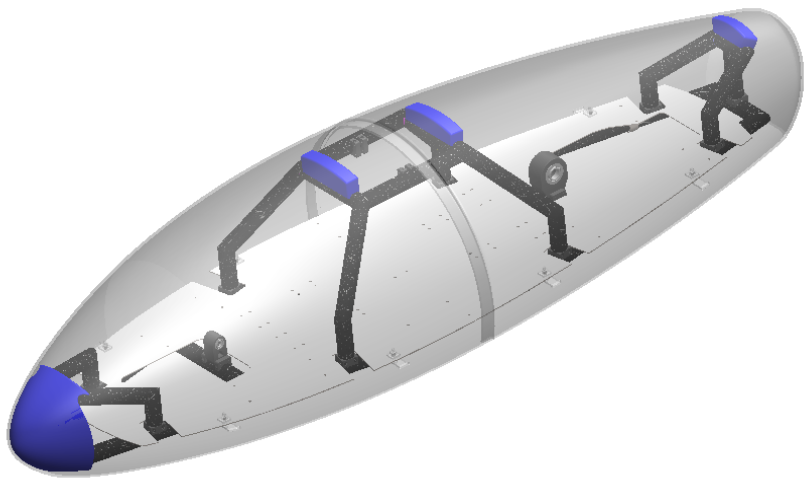

Figure ST1: Shell and Frame Assembly Integrated

The geometry of the shell was iterated to achieve optimal aerodynamic qualities (lowest pressure, lowest turbulence), with CFD analysis of several candidate shell geometries in ANSYS Fluent. The optimal geometry was then selected to be constructed from a sandwich structure of prepreg carbon fiber and Nomex honeycomb. To manufacture these composite materials, a male and female mold were created prior to the lay-up of the sandwich structure. A structural simulation on the shell based on aerodynamic forces will be conducted to verify the rigidity of the materials and the drag forces that would be experienced during the pod's operation.

The frame component is broken down into two sub-components: (1) the carbon fiber assembly, (2) the sheet metal base. The full frame assembly is shown in Figure ST2. AISI 1020 Steel was chosen as the material for the baseplate due to its high stiffness, relatively low density, and ease of manufacture. The sheet metal base serves as a mounting point for the components of other components (shell, braking tank, etc.), while the carbon fiber assembly serves as the chassis of the pod, providing the majority of the pod's structural rigidity. The carbon fiber frame is

assembled with RockWest carbon fiber tubes, which are joined together via RockWest adaptors or epoxy and prepreg, shown in Figure ST3. Two main simulations will be conducted on the frame: (1) A static simulation to determine the strength of the frame and baseplate when fully-loaded with all the other subsystem components, (2) A dynamic simulation investigating the stresses in the frame structure during an extreme braking case.

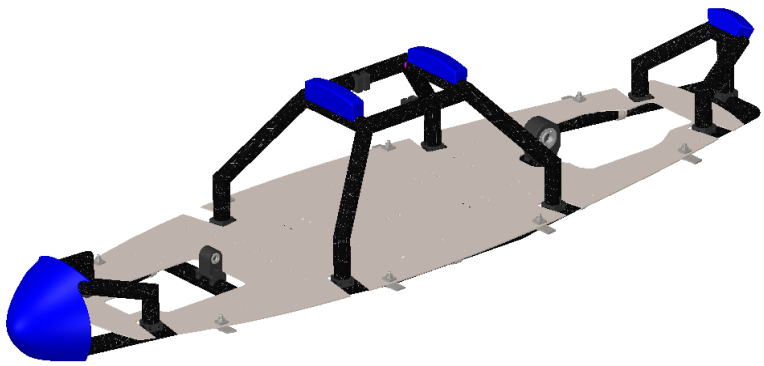

Figure ST2: Full Frame Assembly

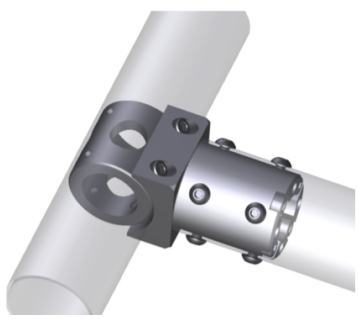

Figure ST3: RockWest Tubes and Connectors

Figure ST4 shows the frame is attached to the sheet metal base by 10 U-clamps that run along the bottom of the frame, with the sheet metal base in turn being epoxied to the shell by 8 L-brackets. The shell also rests on four foam blocks located at the front, mid, and back of the frame, which provides additional support and vibration dampening for the shell, which are shown as blue in Figures ST2 and ST4.

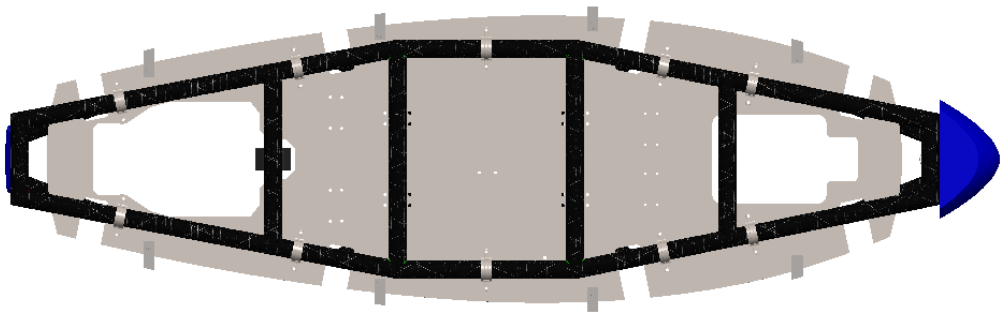

Figure ST4: Bottom View of the Frame Assembly. U-Clamps and L-brackets shown.

The carrier component is an infrastructure that will be used to lift and transfer the pod to the track in the prior to the pod's operation. This carrier (seen in Figure ST5) is a replica I-beam of the test track defined in the EHW 2021 Rules & Regulations document, with 3 handles spaced at equal distances on each side (6 total handles). The carrier also includes a rubber guide to align it with the test track, as well as stoppers protruding from the I-beam which secure the pod from moving. Structural simulations were conducted on this component to ensure its integrity and verify that it can (1) support the weight of the pod without major deformation, (2) not fracture or fail while lifting the pod, (3) be portable by a team of 6 individuals without additional equipment. This is the main infrastructure the structures system requires, as it is a static system, needing no other subsystems to serve its function.

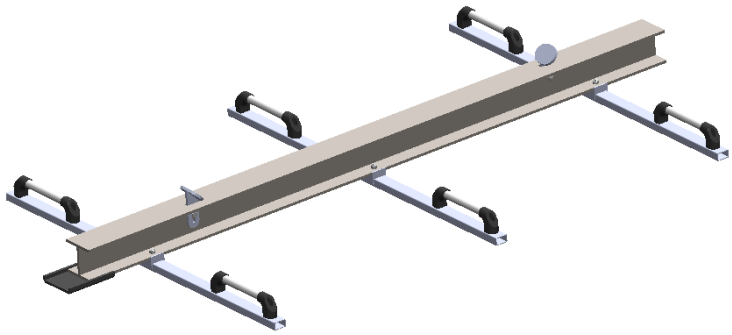

Figure ST5: Carrier Mechanism Assembly

Table ST1: Dimensions of all Structures Components

Maximum Dimension	Length	Width	Height
Shell	2.16m	0.66m	0.44m
Frame	2.08m	0.62m	0.36m
Carrier	2.7m	0.75m	0.36m

Safety

The main safety risks for the structures subsystem are concentrated on the sheet metal base and carbon fiber tube backbone as these support the main loading of all the other components. The shell itself does not impose safety risks as no components are mounted directly on it. The main consideration for integrity of the shell is from anticipated aerodynamic loading, which is relatively small in comparison to the stiffness provided by the prepreg and honeycomb it is composed of. To ensure safety, various simulations will be conducted on the shell and frame and were verified based on safety factor standards provided in the SpaceX Hyperloop Pod Competition, which state a safety factor of 2 for most cases, and 3 for extreme scenarios.[1] Our team will consider the safety factor as a pass criteria for all safety requirements.

The static structural frame simulation will ensure the stresses and deformation generated by the load of all the pod's subsystems when fully assembled and stationary will be within acceptable tolerances. This simulation is setup in ANSYS Static Structural, by calculating the load of each component (including the frame and shell), applying their load to the locations where they are attached to the frame (the frame's load is distributed uniformly across the frame), and simulating the stress and deformation caused by the combined effect of the loading of all the components. As this is a static simulation, a safety factor over 2 is considered a pass.

The dynamic structural frame simulation will ensure the stresses and deformation generated during an extreme braking case will be within acceptable tolerances. This simulation is set up in ANSYS Static Structural by adding the time-variable force of braking to the frame elements supporting wheels and the braking system to the existing loading of all the components developed in the previous simulation, with the stress and deformation being simulated as before. The simulation will indicate the force of braking and change in force caused by braking. A safety factor greater than 3 will be a pass for this simulation as braking is considered to be an extreme scenario.

[1] "Hyperloop", *SpaceX*, 2020. [Online]. Available: https://www.spacex.com/hyperloop. [Accessed: 13-Dec-2020].

The shell of the pod will primarily endure aerodynamic forces as the main source of loading. Therefore, the pressure loads from the CFD analysis will be translated to the shell in a static simulation. To provide background, the layers of prepreg are stacked on top of each other at various angles. In this simulation, the most optimal configuration of the stackup layers of prepreg will be determined through iterations, using the lowest deformation/stress as the metric for this objective. From determining the ideal stack up configuration, the safety factor on the shell must be greater than 10 to be considered as a pass. The reason for a higher safety factor in this case is due to the unpredictability of manufacturing with composites.

Due to cost constraints, the majority of tests conducted by the structures system on the entire pod will be non-destructive. The main non-destructive test is a tolerance test. The tolerance test will be used to ensure the gap between the two halves of the shell are flesh with each other. The pass criteria of this test is to ensure there is no greater than 0.01mm (based on accuracy of calipers used for measuring) between the two halves. This value is chosen to be as low as possible to avoid any unnecessary drag from airflow seeping through the gap. Shall this test fail, foam will be placed to aid in closing the gap between the two halves of the shell. Other planned non-destructive tests include vibration tests and loading tests, which will continue to be researched. The destructive tests will only be completed on the RockWest carbon fiber tubes which are epoxied together. Due to the bonding of tubes via epoxy being too complex to simulate with acceptable accuracy, a bending test will be conducted to determine the strength of these joint tubes. Should this connection be able to withstand a specific loading (TBD through simulations), it will be deemed as safe and the entire frame can then proceed with manufacturing.

PROPULSION

General Overview

The propulsion of the UTHT Pod I is achieved by an in-wheel drive system which is composed of two main subsystems, the Front Wheel Assembly and Rear Wheel Assembly (see Figure P1). The propulsion of the pod is achieved by an electric motor mounted directly to an inner aluminum 6061-T6 wheel core. The components of the drive system are highlighted further below.

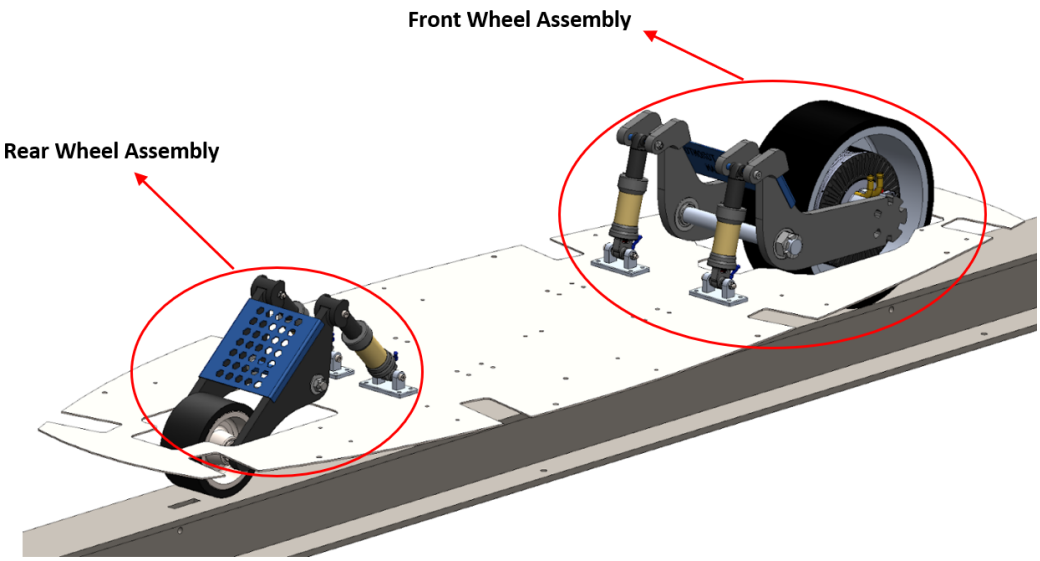

Figure P1: Overview of the Propulsion System's components

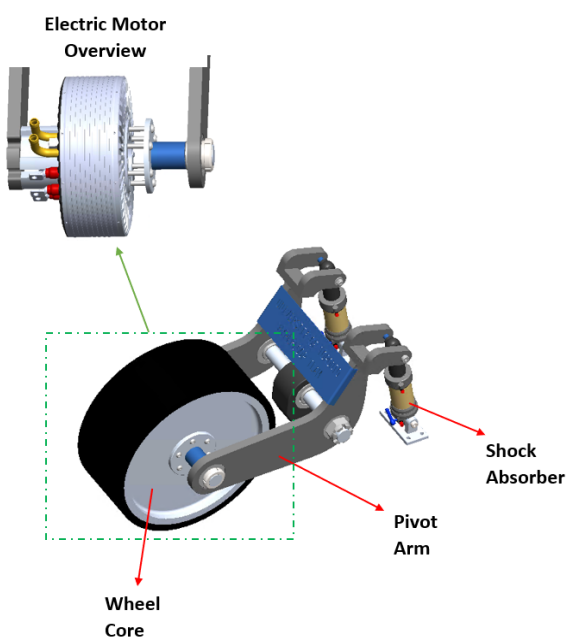

Figure P2: Rear drive components

As shown in Figure P2, the main components which make up the Rear Wheel Assembly are the wheel core, pivot arms, shock absorbers, and an electric motor (Emrax 188). Through the use of a motor spacer and a wheel adapted shaft, the pivot arms will connect the shock absorbers to the Rear wheel system.

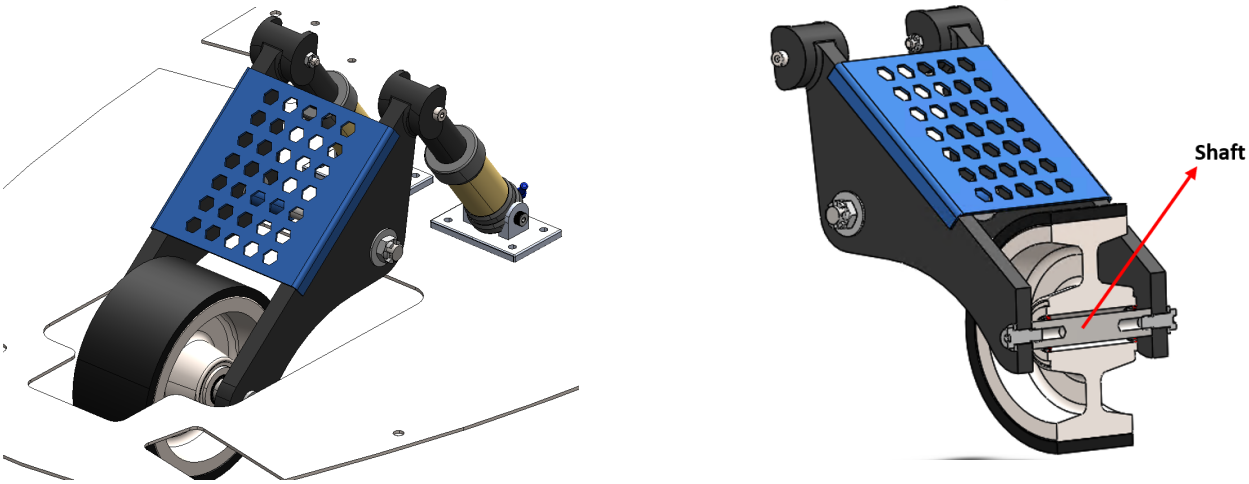

Figure P3: Front wheel assembly (left) and its associated section view (right)

As shown in Figure P3, the main components which make up the Front Wheel Assembly are the wheel core, pivot arms, and shock absorbers with the pivot arms connected through the use of a steel shaft. General sizing is shown in Table P1.

Table P1: Propulsion system's sizing of major components and assembly

Component/Assembly	**Sizing**
Front Wheel	6 in diameter, 3 in width
Rear Wheel	12 in diameter, 5 in width
Shock Absorber	200 mm eye-to-eye, 55 mm travel, 46 mm diameter
Front Wheel Assembly	225 x 290 x 480 mm (width x height x depth)
Rear Wheel Assembly	297 x 313 x 570 mm (width x height x depth)

<u>Front Wheel Assembly</u>

The front wheel has an overall outer diameter of 6 in, width of 3 in, and capacity of 2000 lbs. The wheel has a coating made of polyurethane with a hardness of Shore A 95. The suspension

arms on the front are made of 0.6 in thick Aluminum 6061-T6. As seen in Figure P4 below, the suspension arms are connected to the connector shafts in between the shocks and the front wheel.

Two adjustable air shocks are used with an eye-to-eye distance of 200 mm, shocks can travel 55 mm and they weigh 395 g. The shocks are connected to the floor of the body and also to the two front suspension arms. The anti rotation plate is made from 2 mm thick Aluminium 5052-H34 sheet that was bent to create a plate that sits between the suspension arms and prevents their unwanted rotation. The plate is 6x6in and has hexagonal cutouts to reduce weight (see Figure P4 right).

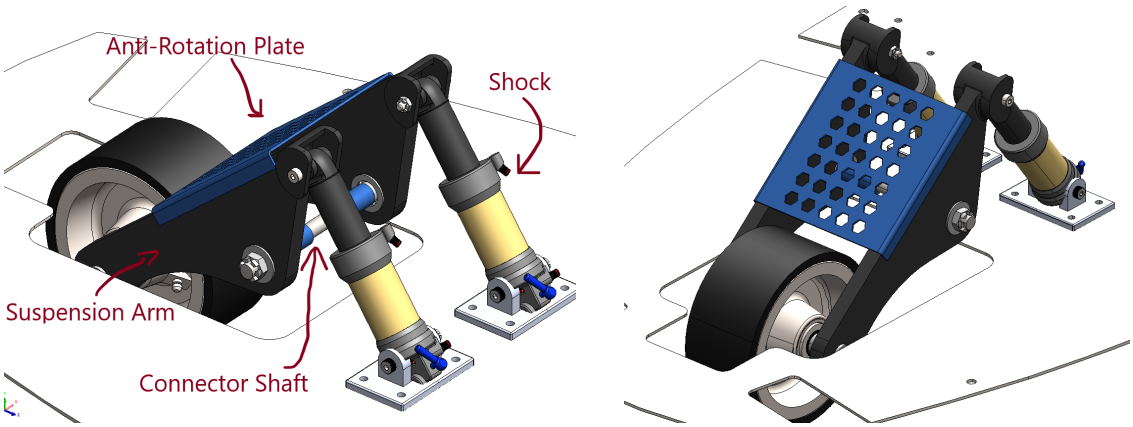

Figure P4: Captures of the front wheel assembly

<u>Rear Wheel Assembly</u>

The rear wheel has a coating made up of castable polyurethane shore A80 with an outer diameter of 12 in and a width of 5 in. As shown in Figure P5, the rear wheel also has a hollow section in order to mount the motor. The two rear suspension arms are 0.6 in thick and are made up of Aluminum 6061-T6. The suspension arms are connected to the connector shafts in between the shocks and the rear wheel.

Two identical adjustable air shocks that were used in the front are used here in the rear. The shocks are connected to the floor of the body and also to the two rear suspension arms which are connected to the rear wheel.

The rear anti rotation plate is made from 2mm thick Aluminium 5052-H34 sheet bent to create a plate that sets between the suspension arms and prevents their unwanted rotation. The plate is 9 x 3 in. The Emrax 188 motor features an in-wheel drive mechanism for optimal space efficiency. The motor is directly mounted to the rear wheel, is connected to the left suspension arm via the motor spacer and provides 50 Nm of continuous torque.

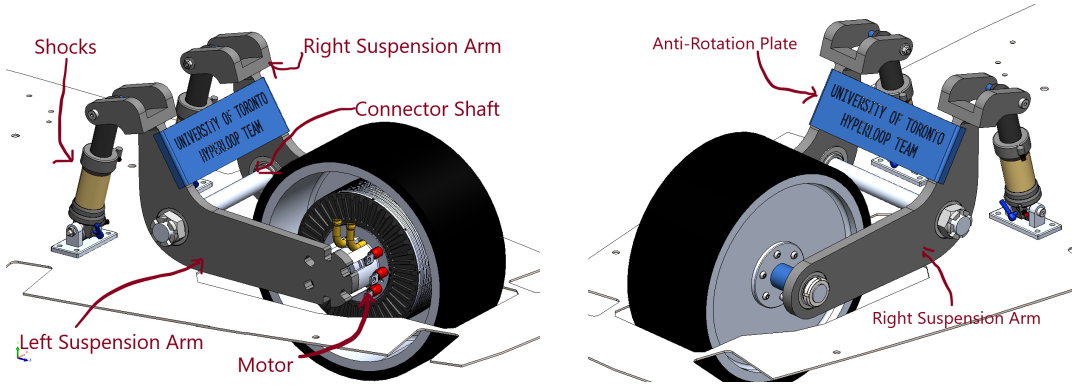

Figure P5: Captures of the rear wheel assembly.

The pod utilizes a rear in-wheel drive system associated with idler wheel pairs to provide vertical and horizontal stability and additional clamping force. Prior to the run, the control system will be programmed to adapt the speed profile based on the track length. Then the pod will be placed on a platform for the final stage motor testing and shock tuning. It will then be lifted up onto the track. The front and rear wheel will be placed on top of the I-beam flange. As shown in Figure P6, the idler wheel pairs will be clamped onto the web and beneath the top flange for vertical and lateral stabilization purposes. With this, the pre-run preparations are completed and the pod is ready to operate.

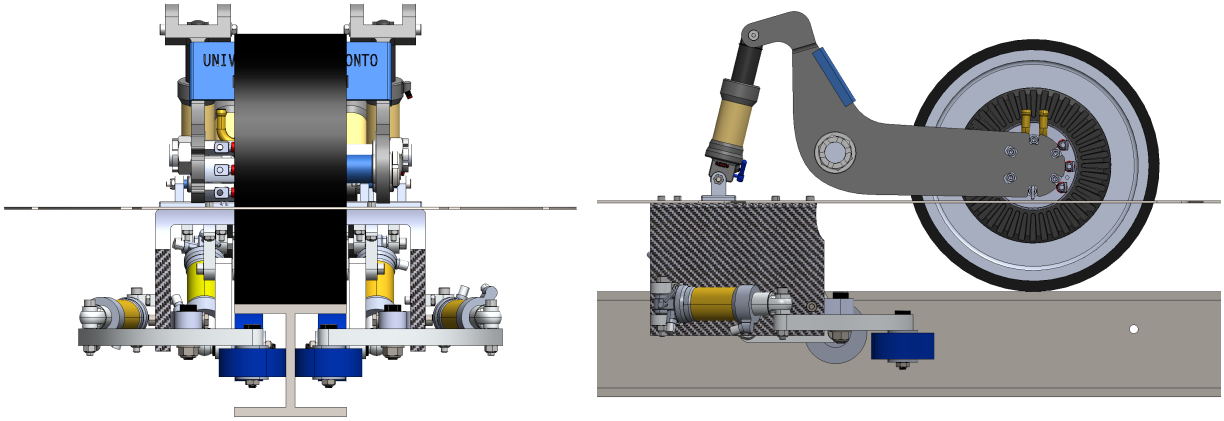

Figure P6: Front and side views of the rear drive and stability systems.

During the run, the pod will start propelling at around 0.2 g. It will keep accelerating to the desired velocity depending on the track length. The pod will not idle unless its maximum velocity is reached (limited by battery and motor power). When braking distance is reached or emergency brakes are required, the control system will trigger the braking pads to clamp on the top flange and decelerate the pod at around 0.7 g until stopped.

Required infrastructure for the propulsion system includes the shock tuning platform (made by the team) and an I-beam track based on the EHW 2021 Rules & Regulations document.

Safety

Key elements of the pod's propulsion includes the Emrax 188 motor (as shown in Figure P7), directly mounted to the rear drive wheel and providing a continuous torque of 50 Nm and a continuous power of 15 kW. The motor uses a liquid cooling mechanism which is integrated into the motor by the manufacturer. The key risk factors for the motor are the cooling mechanism and voltage control. Since the pod's design does not utilize a gearbox, the motor operates at a high power value throughout the run and for different velocity profiles; therefore, keeping the temperature profile of the motor in check is of extreme importance. For safety purposes, the motor features a peak power of 52 kW yet it only operates at 30% of its maximum output (15 kW) continuously throughout the run. Moreover, due to the high voltage value being fed to the inverter and the variable frequency of the drive, voltage related complication with the inverter during the run are important risk factors. Prior to EHW, the motor will be extensively tested without being connected to the pod in order to verify the coherence and effectiveness of integration with controls and electronics systems.

Figure P7: Images of Emrax 188 electric motor.

Shock stiffness is a dominating factor of the pod stability during the run. Depending on the actual track conditions, the shocks will be calibrated to a proper stiffness level prior to the demonstration. The main risk factors involved with the suspension are the high stress values of the joints where the shocks and suspension arms connect, as well as proper calibration of the shocks prior to the EHW demonstration.

To avoid any potential structural failures, the front and rear suspension arms were designed in shapes that feature stability, strength, and light-weight. Static and dynamic simulations were performed on the arm geometries to withstand loads, vibration, and bumps at a minimum safety factor of 2.

The rear drive wheel was designed to adopt the in-wheel motor and ensure the center of mass is centered to avoid tilting. Various loads have been taken into consideration when designing the wheel, including the pod mass, motor torque, centrifugal load, and shear. The wheel is coated

with a layer of polyurethane with a hardness of shore A80 to provide damping, protection to the track, and maximize the traction (coefficient of friction). Depending on the track material, the team will conduct associated material testing (tribological studies) on the polyurethane for COF and heat profiles. Final testing of the pod will be on the whole integrated system on a test track.

BRAKING

General Overview

The purpose of the braking system is to slow down and stop the pod safely. The braking units clamp onto the top flanges of the I beam and the pressure is applied by an internal spring. To release the clamping force, compressed air (145psi) must be fed into the brakes to counteract the spring compression force. To supply the air, a compressor is used to fill up a 100oz tank to 1000psi. Then the pressure is stepped down with a pressure regulator to the 145 psi needed and the flow is controlled by a three way (normally closed) solenoid valve. When unpowered, the valve allows air to be sent to the braking units. When powered, the valve vents air to the environment and triggers a quick exhaust valve to release air from brakes faster.

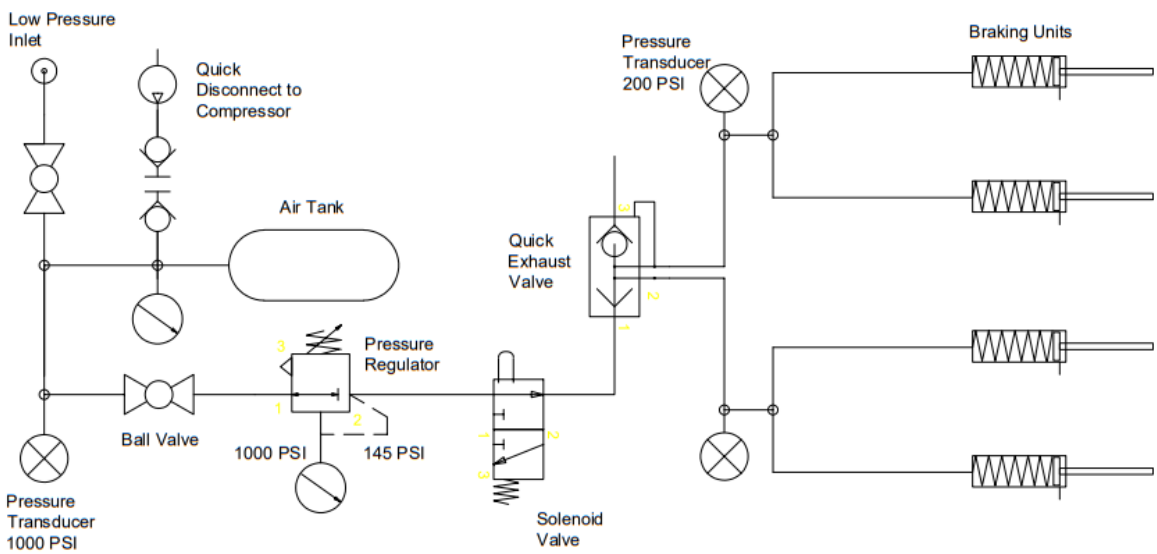

Figure B1: Pneumatic Diagram of Braking System

The general size of the entire system is 500 x 493 x 420 mm (width x height x depth).

Components of the system are listed in Table B1.

Table B2: Components of the Braking System

Name	Description
First Strike Hero 2.0 100/4500 HPA Carbon Fibre Tank	Stores compressed air safely and allows many uses of the braking units; rated for 4500 psi and has outlet pressure of 300-1200 psi
OMEGA-FLO™ 3-Way Normally Closed Direct Acting Solenoid Valves	Changes the flow of air when given a current and allows the quick exhaust to be activated through change in pressure

ProSense SPTD25 pressure transmitter	Thin-film sensing element provides very fast response time to provide real time pressure in pneumatic system
Swagelok Stainless Steel PR Regulator	Pressure-reducing, spring-loaded regulators that minimize droop in high-flow conditions while maintaining a constant downstream pressure; rated for 3600 psig inlet and 250 psig outlet
Kobelt Model 3903 Quick Release Valve	Provides fast exhausting of air from the pneumatic system. Exhaust air is vented directly from large valve orifices instead of going back through the solenoid valve
Kobelt Braking Units	Provides 900N of compressive force onto the test track when depressurized, contains replaceable brake pads with 0.3 friction coefficient

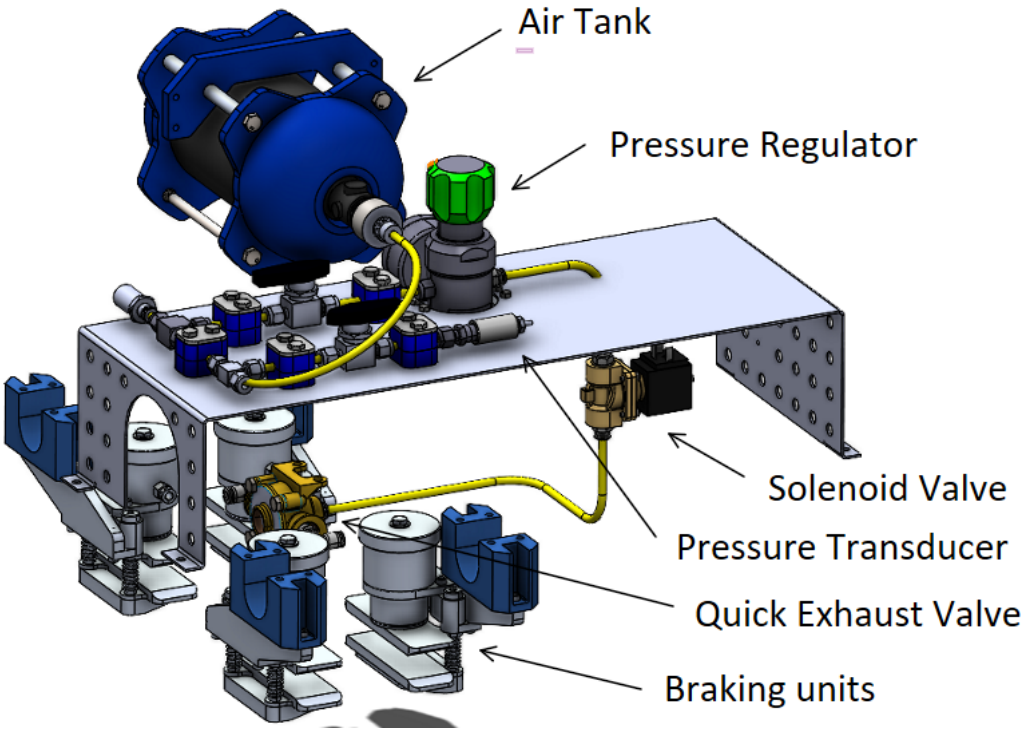

Figure B2: Appearance of the Braking System

The air tank is suspended at the top of the pod with attachments to the carbon tube frame, while all other components are fixed onto various sheet metal pieces attached to the frame of the pod.

To operate the system, it needs to be pressurized with an air compressor before the demo, which requires an AC outlet. To demonstrate deceleration of the pod from the braking system, the pod needs to be placed onto the provided test track.

Safety

Key elements of risk of the system include:

- Braking units: actuates when filled with air (clamp onto I beam) and releases when air is released
- Solenoid valve: it alone controls the states of the braking system (release or actuation of brakes)

Highest safety risks are:

- Air tank: a high pressure vessel rated up to 4500 psi, filled to only 1000 psi for safety. Need to prevent contact with heat or impact
- Power loss during a power loss, the solenoid valve will automatically vent towards the environment, triggering actuation of brakes and bringing the pod to a stop

In order to test the subsystem, these tests will be performed:

- Stress testing: the system will be pressurized multiple times to ensure that there is no mechanical weak points
- Leak checking: short-term leaks will be identified by applying soapy water onto joints of the pneumatic system, and long-term leask will be identified by leaving the system pressurized for 24 hours and logging pressure inside. Any leaks will be resolved prior to demonstration
- Vibration testing: the system will be vibrated to simulate external forces during demonstration to check for any potential failure modes
- Live runs: the system will be tested with all other systems in a live run to ensure functionality

STABILITY

General Overview

The stability subsystem is responsible for keeping the pod in the center of the track while minimizing vibrations due to uneven surfaces. Disturbances from track misalignment are to be expected as per test track specifications; EHW 2021's I-beam has a lateral tolerance of +/- 3mm. Pod I features two stability units located at the front and back of the pod. As shown in Figure S1, each unit consists of two lateral and two clamping suspension mechanisms. The C-arm that supports both mechanisms is made of carbon fiber and structural foam to withstand the large loads coming from the lateral system. The C-arm also facilitates the integration of the stability unit with the pod's main structure as it is bolted down to the sheet metal base. This system has been designed for a straight track, i.e. with no curvatures. Table S1 states general sizing of components.

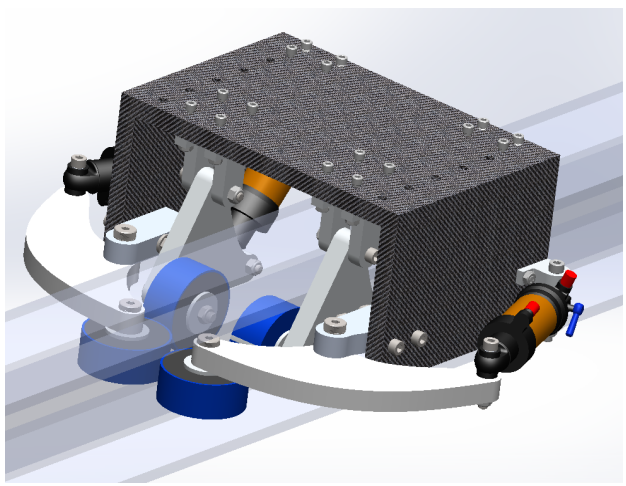

Figure S1: Stability unit assembly

Table S1: Stability system's sizing of major components

Component	Sizing
Wheel	3 in diameter, 1.35 in width
Shock Absorber	165 mm eye-to-eye, 35mm travel
C-arm	306 x 155 x 210 mm (width x height x depth); 17mm of wall thickness

Lateral Mechanism

The lateral mechanism prevents yaw, roll, and sway movement. Each stability unit has two pairs of wheels running along the web of the I-beam. Load is transferred from the wheel into a force arm, which rotates about a fixed pivot point, and into a shock absorber mounted to the C-arm

with the help of two hinges. A closer view of the lateral system and its components is shown in Figure S2.

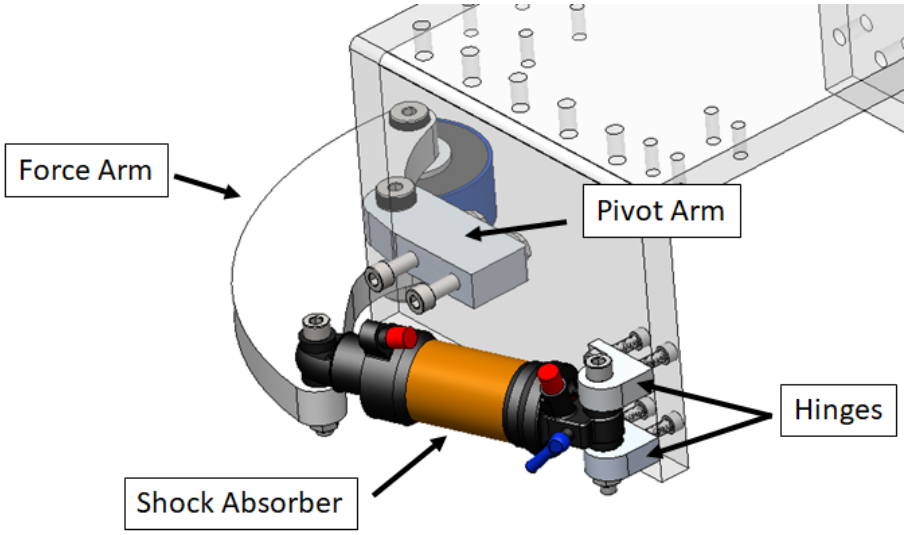

Figure S2: Close-up of the lateral suspension components

Before operating, this system will be calibrated to ensure that the vehicle enters the track pointing in the forward direction with a tight tolerance. If there is misalignment the shocks will compress, creating a correcting moment and restoring the pod's original position.

<u>Clamping Suspension Mechanism</u>

Similarly, each stability unit has two pairs of wheels running along the bottom of the top flange of the I-beam that serves to provide control motion in two degrees of freedom: pitch and heave. The main purpose of the clamping suspension is to absorb vibrations in the direction perpendicular to the track. Our pod is relatively light for the speeds it aims to achieve, so this mechanism is necessary to prevent excessive motion in the vertical direction. A force arm bridges the clamping wheel with the shock, allowing for vibrations and irregular motion to be absorbed by the system. The force arm has freedom to rotate about its uppermost bearing hole to allow for the movement caused by track imperfections. The main load that the arm experiences is a bearing load from the wheel's vertical movement. Calibration for this mechanism is similar to the lateral one. Its components are depicted in Figure S3.

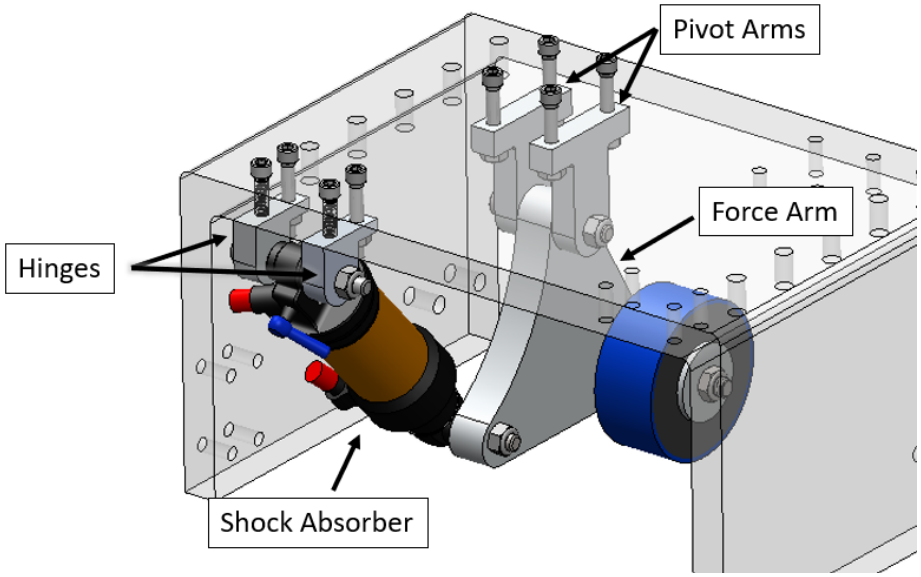

Figure S3: Close-up of the clamping components

Geometries and materials were iterated to optimize performance and improve stress response of the linkages. Through structural analyses, the team found that Aluminum 6061-T6 meets the safety requirements.

Furthermore, the position of the wheels or any other component of the stability unit does not interfere with the I-beam keep out zones established by EHW. Figure S4 shows the position of the current stability system's wheels with respect to the web and bottom of the top flange of the I-beam.

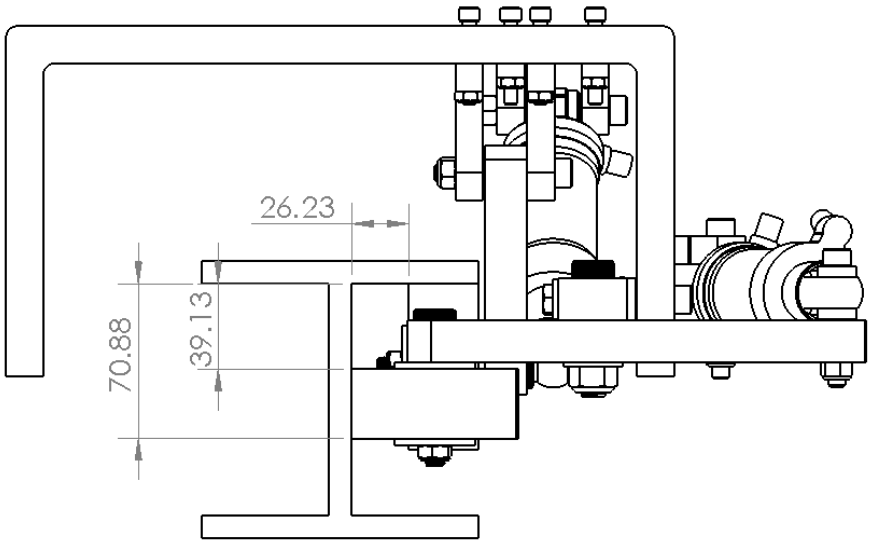

Figure S4: Position of wheels with respect to the I-beam (dimensions in mm)

Safety

In order to see how our system would behave under dynamic motion, we looked at the mode shapes or deformation the components would experience when vibrating at their natural frequencies. The frequency of the structure depends upon mass and stiffness. Higher the frequency and lower the period means your structure is stiff and will have less global response (this response is a relative term). One limitation of this theory is that it holds only in the elastic range.

Two frequency sources in the pod when achieving a speed of 70 m/s are the motor and the beam misalignments with 73.31 Hz and 23.33 Hz, respectively. After comparing the pod's frequencies to the motor (source) frequency generated, it was found that the lowest mode frequency is twice that of the source frequency. Thus we can say, for a given 70m/s speed, a safety factor of 2 was applied to avoid resonance.

To validate modal analysis results and prevent any resonances in the system, the team plans to build a device that allows the shock to rapidly move up and down. A bar connects the shock to a rod moved by a motor while an accelerometer measures vibrations. The up and down motion is caused due to the offset created with a smaller bar connected to the shaft of the motor as seen in Figure S5. The resting bar should be fixed to the ground as a safety measurement and to minimize noise in the vibration data when running the test.

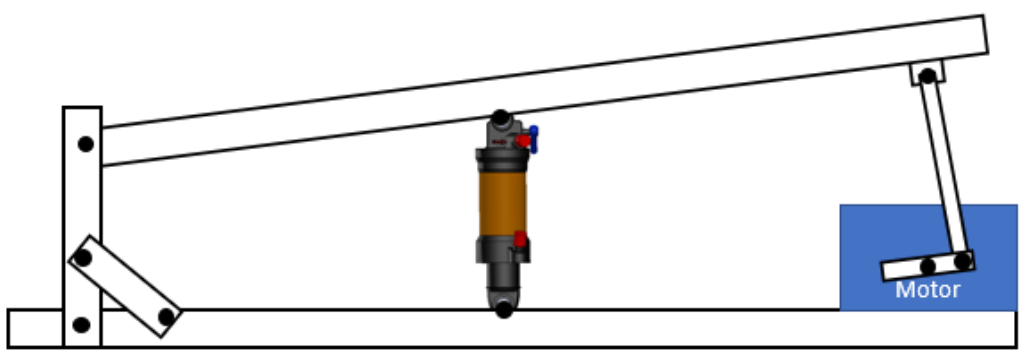

Figure S5: Frequency testing device setup

In terms of shock selection, the team chose air shocks instead of coil shocks because the properties of the former can be adjusted by changing the pressure and pre-compression. This flexibility is especially important because the two clamp and lateral stability systems have different requirements. The guiding principle for the clamping system is that it needs a relatively small preload and low spring constant, while the stability system requires a larger preload and high spring constant. The downside of choosing air shocks is that they require more extensive analysis and testing. The major limiting factor during shock selection was geometry. The

stability system had to fit within the existing design of the frame, brakes, wheels, and shell; thus the ideal shock size was about 165 mm.

Shock stiffness behavior characterization is still under process at the moment with the help of a testing device designed by the team shown in Figure S6. However, this device needs to be redesigned as it deflects at loads higher than 1 kN which represents only 35% of the shock's total travel. The team aims to achieve a minimum of 70%.

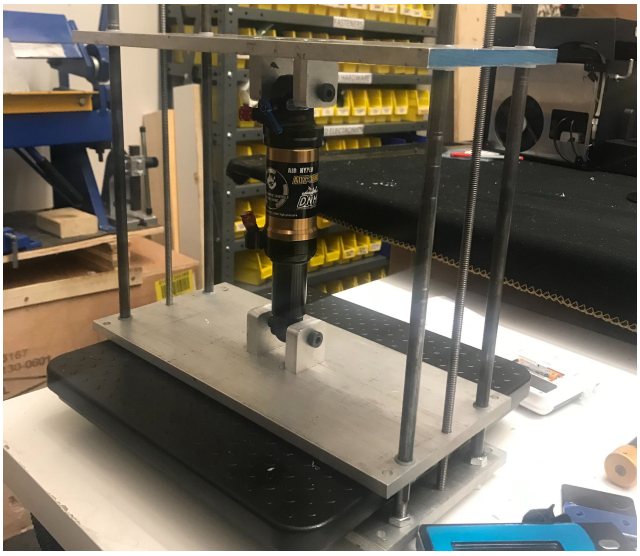

Figure S6: Shock testing device

Finally, shock damping will be also tested as the team needs to complement and verify the simulation results. UTHT will use a disk of 2.5 m in diameter, rotated by a motor, to compare the wheels' movement with and without the shock. Weight will be placed on top of the system to simulate the pre-load and mass of the pod (see Figure S7)**.**

This testing machine already exists at the University of Toronto for rolling resistance tests; UTHT will adapt it to accommodate a shock and a smaller wheel. The machine also counts with an accelerometer to measure vibrations. We will use the data collected by the accelerometer and other known variables to find the mathematical model, including the damping coefficient, that best describes our system.

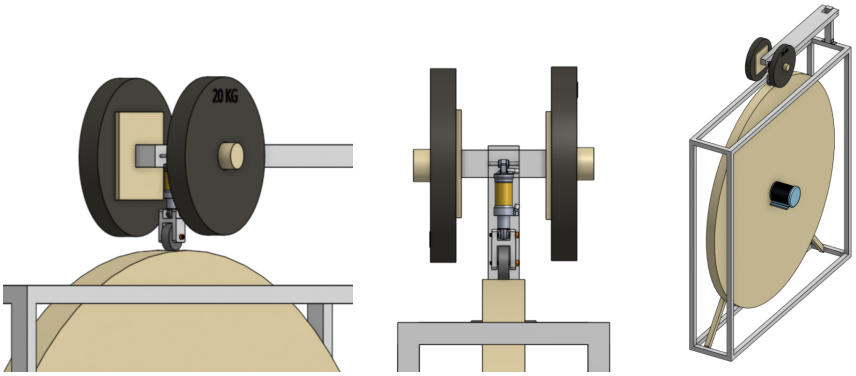

Figure S7: Close isometric, front and full views of the test setup

ENERGY SYSTEMS

General Overview

The UTHT Energy Systems is a power system designed to provide electrical power to the motor and the electronics for the UTHT Hyperloop Pod. The system achieves this by having 2 sets of power systems, as depicted in Figure ES1:

- A high voltage (HV) power system that provides power just for the motor;
- A low voltage (LV) power system that provides power for the electronics and motor controller

HV Power System

The high voltage power system is designed to provide power for just the motor: an EMRAX 188 motor. It utilizes a 70S4P battery configuration of Samsung 18650 25r cells in order to provide a max 22 kW of power to the motor. The power to the motor is delivered and controlled via a DC to 3 Phase AC inverter: the PM 100 DX Inverter, supplied by Cascadia Motion. At the EHW, we intend on running the motor at a max of 15 kW, and hence the high voltage battery will run at a max of 16 kW.

The HV battery provides DC power to the inverter at 252 V nominal, running at 60 A nominal, and when fully charged 294 V at 60A. The inverter will convert this DC power into 3 phase AC power which will be used to power the EMRAX 188 motor housed in the front wheel. The HV inverter system is controlled by an arduino via CAN BUS and controls the actual HV Battery connection to the system. The power for the arduino is supplied via the LV Power System.

System's dimensions are being worked on but roughly will be 520 x 310 x 150 mm (width x height x depth).

LV Power System

The low voltage power system is designed to support several other subsystems, most notably the electronics and the inverter controller. The LV power system utilizes a 6S2P battery configuration of Samsung 18650 25r cells in order to provide a nominal 24 V DC power source. This battery is connected to a power distribution system that allows the system to provide regulated DC power at 3 different voltages: 5 V, 12 V and 24 V. These different voltages will be referred to as "voltage rails" throughout the document.

The LV system provides power for all the sensors, arduinos, main flight controller and the inverter controller. The inverter controller is built within the inverter but requires an external 12V power source in order to run. This 12 V power will be supplied by the 12 V rail from the LV system. It is also interfaced and controlled via an external arduino via CAN BUS.

System dimensions are 144 x 36 x 65 mm (width x height x depth).

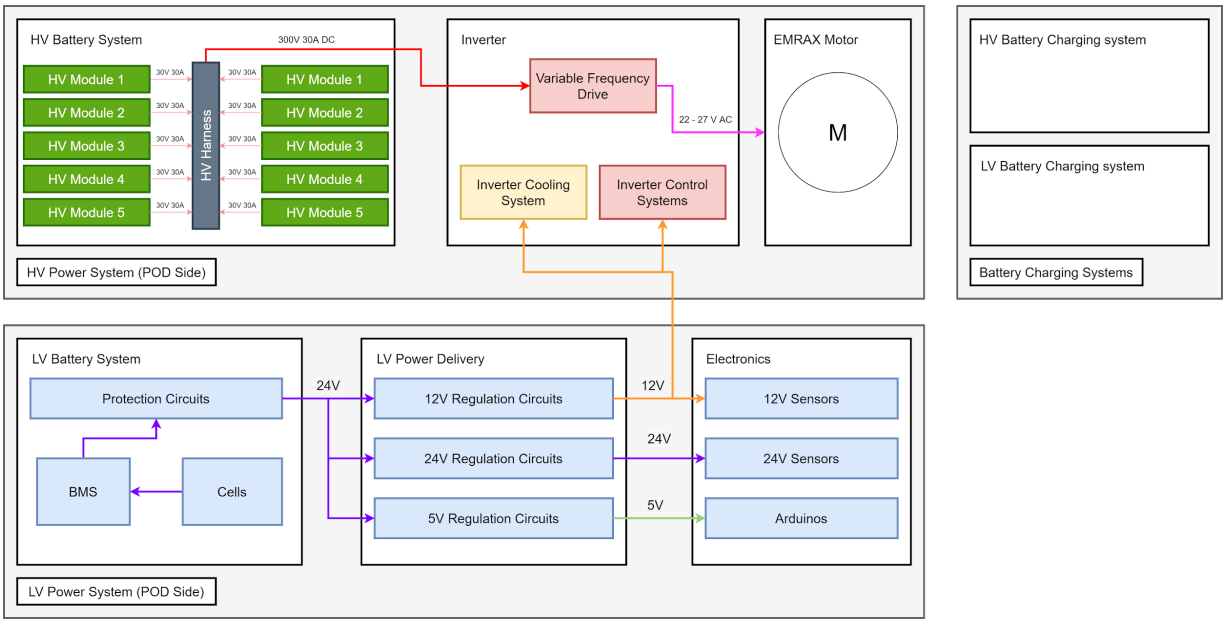

Figure ES1: High Level Overview of Energy Systems

The system comprises 2 separate power systems and a charging system as mentioned above. Below is a list of the hierarchy of each sub-system and the main components of each sub-system. More details on how these individual components and subsystems works can be found in Appendix AES.

- **HV Power System**
  - HV Battery (Figure ES2)
  - PM100DX Inverter (Figure ES3)
  - Inverter Pre-Charge System
  - Inverter Cooling System
- **LV Power System**
  - LV Battery
  - LV Power Distribution System
    - A buck converter shown in Figure ES4
- **Charging System**
  - 750W 12V HP Server Power Supply
  - ISDT Q8 500W Balance Charger (see Figure ES5)

<u>Energy Systems Integration</u>

Physically, the power systems are located within the center of the frame and central body of the pod. The batteries are all located on the center of the pod in order to keep the pods center of balance close to the center. The energy systems are made up of 2 power systems: HV Power and

LV Power systems. The HV Power system will be connected to the motors power inputs via three 2 gauge cables which will supply the 3 phase AC power from the inverter to power the motor. The inverter's controller is interfaced via CAN BUS from arduino #3 which is an arduino from the electronics sub-system.

The low voltage power system will be housed in the center of the pod right next to the high voltage power system. It will be providing power to the following sub-systems:

1. Electronics
2. Software (via-electronics)
3. Braking

The high voltage power system only provides power to the propulsion system.

The system will be used to power the electronics and the pods onboard motor. The high voltage batteries will be used to provide power to the inverter and motor. The low voltage batteries will be used to power the pods electronics and communications systems. Both the LV and HV batteries will be removed from the pod for charging, and they will be plugged into the charging system. The charging system will require a mains power outlet capable of handling at least 750 W. More details on the mains power outlet required of the charging system are detailed in the charging system section.

The other systems that need to run in order to operate energy systems are the electronics and software sub systems. They are interconnected, and the software and electronic control systems are what will allow us to operate the high voltage power system. The low voltage power system does not rely on any other systems to operate.

<u>Energy Systems Safety</u>

Some key elements of the system that incorporate the highest safety risk are:

1. The inverter
    a. The inverter produces a lot of heat, and this heat must be expelled/absorbed and managed by the inverter cooling system. If the inverter gets too hot, it can become damaged, and potentially cause a fire if it shorts the high voltage components. Multiple layers of safety are built into the inverter and the pod control systems to shut off power to the pod if the inverter temperature exceeds a threshold of 80℃.
    b. The inverter also handles the conversion of the high voltage DC power into 3 phase AC for the motor. The high voltage power connections going into and leaving the inverter must be installed properly to ensure complete contact between electrical wiring and the inverter receptacles.
2. The high voltage battery

a. The high voltage battery system will produce a max of 300V and can produce up to 80A of current. Careful consideration has been made to ensure that the wiring and any connectors used in this system will be able to handle these power requirements without overheating.
b. The high voltage battery cells will also be run very hard and there can be a risk of thermal runaway and fire if the cells overheat. A system has been designed in order to be able to monitor and control the temperature of the cells, and each cell is individually double fused to protect the cells in the event of a short. The battery packs are all equipped with a BMS.

The entire subsystem will be assembled and the individual power systems will be continuously tested under their designed loads. The system and its individual subsystems will be assembled and tested inside the Energy Systems Lab at the University of Toronto. During the discharge power cycle, we will monitor the voltage of the system at various points and monitor cell temperatures to look for any anomalies or unexpected behaviour. Additionally, the temperature of various connectors, wires and junctions will be monitored along with current and voltage and compared to expected values. This discharge cycle test will be performed several times in order to ensure consistency in the systems performance.

ELECTRONICS & SOFTWARE

General Overview

Electronics and software covers the design and implementation of the pod's four electronics systems: (1) the sensor system, (2) the internal communication system, (3) the external communication system and (4) the control system. The electronics on the pod were designed for robustness with the primary goals of safety and low-latency. In order to operate, the electronics and software systems require low-voltage power supplied by the energy sub-systems and an external wireless communication network.

Each electronics system is designed to operate on a different level of abstraction. The sensor system operates between the sensors and their corresponding microcontrollers. The internal communication system operates between the microcontrollers and the master computer. The external communication system operates between the master computer and the pilot laptop. The control system operates on two levels of abstraction, with high level decision making on the master computer and low level control systems on the microcontrollers. Figure E1 below illustrates how each of the four electronics subsystems work together.

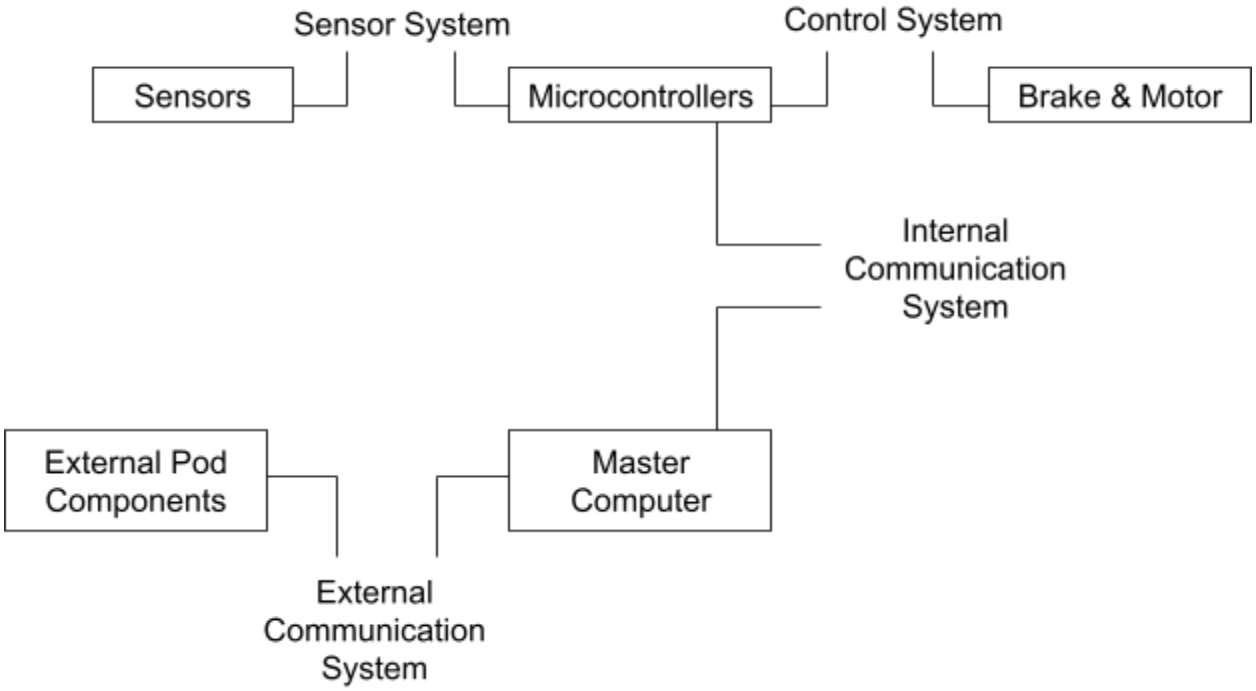

Figure E1: Illustrates how the electronics subsystem operates

Sensor System

The sensor system is designed to monitor the state of the pod. Appendix AE1 contains a detailed breakdown of all sensors and how they will be integrated into the rest of the system for monitoring. The electronics team has worked closely with all other subsystems, ensuring that all monitoring needs of the other subsystems are met. The sensor system monitors the pod's inertial measurements, braking system, region temperatures, vibrations, high voltage DC current, and vertical movement.

Sensor Integration

Throughout the pod there are several different sensors that are necessary to the operation and safety of the pod. These include all of the various sensors outlined in Appendix AE1. Most of these sensors are necessary for diagnostic and safety reasons, for example making sure wheel hubs or important electrical components in the center of the pod do not exceed operational temperatures. Because these sensors are necessary for safety reasons, they need to be implemented in a simple and robust way that constantly provides the pods control systems, as well as its operators, mission critical diagnostics and information. In order to centralize and process the data from these sensors we will have three Arduino Due microcontrollers and accompanying printed circuit boards that both send power to the sensors as well as take in their output data.

This suite of sensors requires the ability to process several different forms of data including digital signals, analog signals, and serial communication data (I2C & TTL). Our Arduinos are limited by specific pins necessary for these serial communication protocols. Having three Arduinos allows us to take in sensor data from every part of the pod concurrently. The data coming from the sensors can be processed to make the information understandable before being sent to the main computer. For example, the 4-20mA output of a temperature sensor needs to be converted to degrees Celsius before it is useful to us. The basic code that is loaded onto the arduinos can handle this task easily.

The PCBs being created to connect these sensors to the Arduinos are necessary to keep wiring clean and organized, while providing a centralized location for wiring to be routed to. They will also be helpful for providing different levels of power to different sensors. The necessary voltage levels required to power our sensors range from 3.3V all the way up to a max of 36V. The low-voltage energy systems on the pod supply the required power for these inputs, which will be connected to each PCB. Then sensors are powered by different power nets on each PCB, depending on what level of voltage they require. This massively simplifies sending power to multiple sensors that need similar voltage levels. Instead of connectors heading from the main power systems unit, only one connection for each voltage level is needed for the PCB, which then connects the sensors to these voltages.

Appendix AE2 contains the complete wiring diagrams that illustrate the connections between each sensor and its respective Arduino Due. In the current plan additional sensors and microcontrollers are kept for backup purposes.

Sensor System Safety

The main point of failure for the sensor system are miscalibrated sensors which pose a hazard of causing unexpected behaviour in the control systems of the pod. The primary solution for this are good calibration practices and frequent calibration testing. Appendix AE3 contains the complete detailed testing procedure for each sensor. To keep the calibration practice consistent, the principles outlined in the Handbook for the Quality Assurance of Metrological Measurements[2] will be employed.

[2] "Calibration Procedures," *NIST*, 31-May-2019. [Online]. Available: https://www.nist.gov/pml/weights-and-measures/laboratory-metrology/calibration-procedures. [Accessed: 13-Dec-2020].

Communication System

The pod communication system is divided into two separate communication networks:

- **Internal Communication System:** Local wired network that connects the microcontrollers to the master computer
- **External Communication System:** Wireless network that connects the master computer to the external network and pilot laptop

Internal Communication

The internal communication system is designed to handle the communication between microcontrollers and between the master computer (Odroid) and microcontrollers. As can be seen in Figure E2, the internal communication system connects all the Arduino boards to the master computer through a wired ethernet-based network.

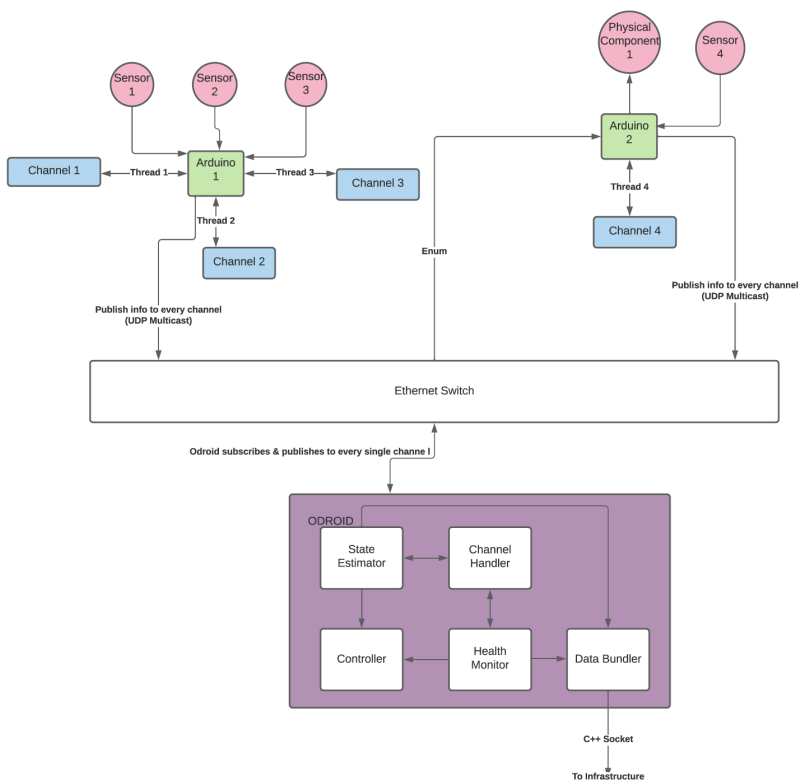

Figure E2: High-level diagram showing the architecture of the internal communication network

All communications on the software side of the internal communication system is handled through a single unified, broadcast-based message passing system, namely the Zero

Communications and Marshalling (ZCM) framework. ZCM is derived from LCM (Lightweight Communications and Marshalling system) and is 95% compatible with the features in LCM[3]. ZCM relies on the use of channels to transmit information between hosts. ZCM was selected for the internal communication system offers a more versatile way of implementing the transport layer as it does not require any assumptions regarding the transport layer which allows for it to have a greater variety of applications.

To enable data sharing, all Arduinos and the Odroid are hosts on the ZCM network and data is shared by publishing messages on channels. The Odroid subscribes to these channels to receive all the data for decision-making. Following this, the Odroid publishes commands to Arduinos through channels, where the respective Arduino will implement the decision logic which is the system response to incoming data such as commands to control the motor or brakes.

External Communication

The external communication system connects the Odroid (master computer in the pod) to the pilot laptop (backend) running on a laptop over a wireless network. The pilot laptop provides an external infrastructure that communicates with the odroid, performs data validation and logging, and provides an interface to engineers for debugging and monitoring.

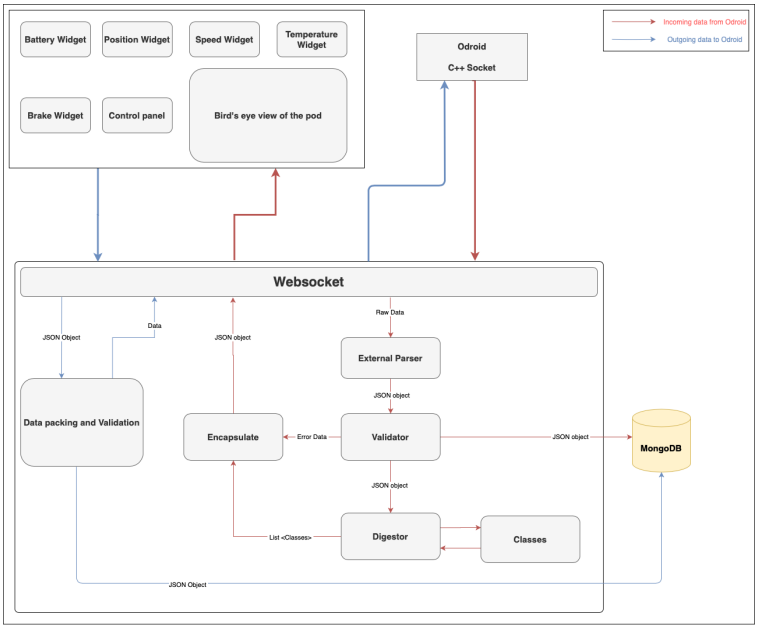

Figure E3: Software Architecture diagram depicting various data routes connecting that infrastructure subsystem

[3] "ZeroCM/zcm," GitHub, 24-Apr-2020. [Online]. Available: https://github.com/ZeroCM/zcm/blob/master/README.md. [Accessed: 13-Dec-2020].

Data that is received from the Odroid is first passed through a validation module. The validation module verifies the content of the message received from the odroid before sending it for further processing. If a particular module fails the validation, an error message is generated which is passed to the main interface for display. This validation module acts as a second-layer monitoring system to the master computer and ensures that the engineer is alerted of any unexpected behaviour.

Communication Safety

All communication systems will be thoroughly tested through targeted software and hardware tests, and through integrated testing of the entire pod. However, the biggest risk in the communication system is an undetected loss of communication between one or many nodes. To ensure that a loss of communication is detected quickly, data validation modules have been implemented within each node to perform checks on incoming messages and detect a loss of communication. In the event of a loss of communication, all nodes in the network are designed to enter the emergency stop sequence. If a microcontroller loses communication with the master computer, the loss of communication will be detected by both the microcontroller and the master computer, triggering an emergency stop in the affected microcontroller and the to the other microcontrollers from the master computer. Similarly, a loss of communication between the master computer and the pilot laptop will also initiate an emergency stop. Through this distributed design, the communication system is robust to a loss of communication.

Control System

The control system controls the motion and state of the pod. This system achieves this by having two subsystems:

- **High Level System:** Decision making software running on the master computer (Odroid XU4).
- **Low Level System:** Microcontrollers (Arduino Due) running control algorithms for the brakes and inverter based on the commands from the master computer.

High Level Control System

The high-level control system is the part of the software that regulates the behaviour of all the other systems present on the pod. It makes use of an Odroid XU4 that runs high-level autonomy on the pod, communicates with sensors, and relays information to the Arduinos and pilot laptop. The control system is responsible for controlling the pod's velocity, braking, battery temperature and monitoring the pod's overall health during operation.

The high-level control system is modelled and implemented as a Finite State Machine (FSM), an approach which simplifies debugging, ensures modularity and uses our limited resources more effectively[4]. At any point in time, the pod is in one particular state. This state, along with inputs from various sensors, are used to make high-level decisions and move the pod to a different state as appropriate. Figure 1 illustrates the state transition diagram of the pod.

[4] Drumea, Andrei & Popescu, C.. (2004). Finite state machines and their applications in software for industrial control. 25 - 29 vol.1. 10.1109/ISSE.2004.1490370.

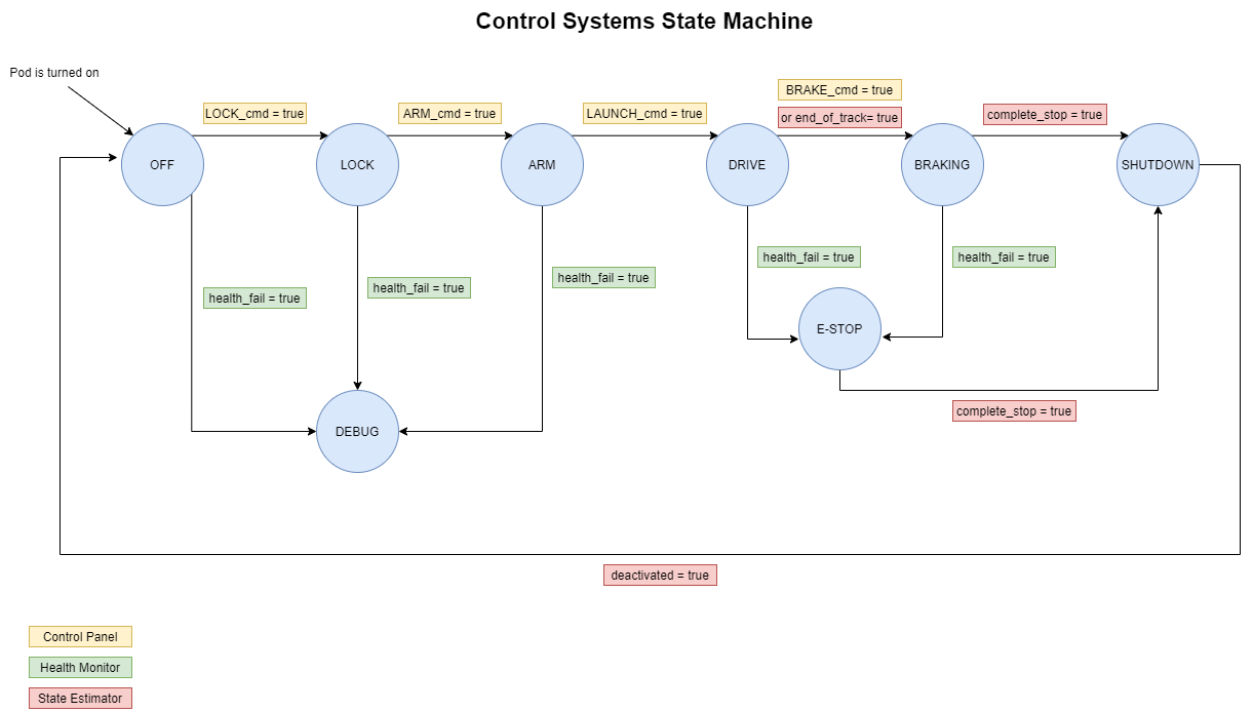

Figure E4: State transition diagram; yellow boxes represent commands received from the control panel, green boxes represent input from the heath monitor, and red boxes represent input from the state estimator.

The FSM receives various inputs from different sources. To further modularize the program, these inputs are processed by separate parts of the software. The Health Monitor receives data from all the sensors, processes it, and sends an error signal to the FSM if required. Meanwhile, the State Estimator performs calculations to estimate various factors.

The software is written entirely in the C++ language, which offers features such as object-orientated methods, template programming, and optimization. This aids our modular approach, and ensures that the system can react quickly to real-time events[5]. The system lives on the master computer. It receives data from and sends commands to the three microcontrollers as well as the pilot laptop.

Low Level System

The low-level system is the part of the software that directly controls the motion of the pod, via the brake subsystem and the propulsion subsystem. The control system is responsible for controlling the brake solenoid valve and the inverter based on the commands from the Odroid XU4. It makes use of an Arduino Due, located on printed circuit board (PCB) #3, known as

[5] Kormanyos, Christopher. Real-Time C++ Efficient Object-Oriented and Template Microcontroller Programming. Heidelberg, 2015.

Arduino Due #3. The wiring diagram for PCB #3 is included below in Figure E5, it can also be found in Appendix AE2.3.

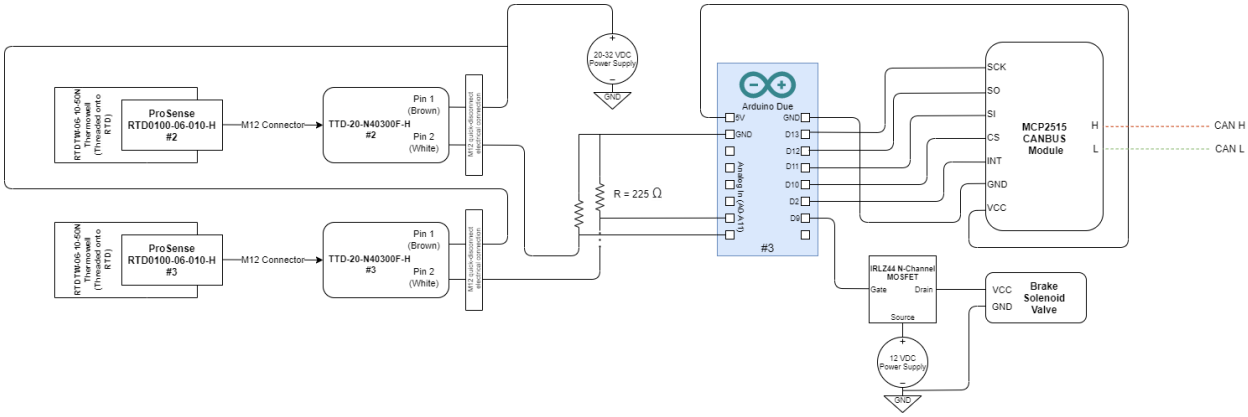

Figure E5: Wiring diagram for PCB #3

Arduino Due #3 is a part of both the sensor system and the control system, as shown in the wiring diagram above in Figure E4. This is due to the inverter controlling the propulsion motor as well as providing data about it.

The internal communication system will be utilized to communicate between Arduino Due #3 and the Odroid XU4. As a part of the ZCM infrastructure, the Odroid XU4 and the Arduino Due #3 will constantly run a handshake protocol to ensure communication is maintained between the two. In the event the Arduino Due #3 fails to complete the handshake, it will go into emergency mode, shut down the motor, and engage the brakes.

Braking System

The braking system also functions as the pod's emergency brakes. The electronics subsystem controls the braking system via the braking system solenoid valve. The solenoid valve controls the pressure, which when released to the braking units, engages the brakes. The solenoid valve requires power to remain closed, operating in an *active low* configuration. As a result, in the event of power loss from the brakes will be automatically activated. The wiring diagram above in Figure E4 shows how using the IRLZ44 N-Channel MOSFET the solenoid valves will be connecting to Arduino Due #3.. The MOSFET allows the Arduino Due 3.3 VDC signal to control the 8W 12VDC power for the solenoid valve[6]. Starting the ARM state, Arduino Due #3 will direct power to the solenoid valve to ensure the brake pressure tank retains its pressure and the brakes are disengaged.

[6]Infineon.com, 2020. [Online]. Available: https://www.infineon.com/dgdl/irlz44npbf.pdf?fileId=5546d462533600a40153567217c32725. [Accessed: 13- Dec-2020]

In the event of a brake command or loss of communication, Arduino Due #3 will disable the power to the solenoid valve which will force it open and send the air pressure to the braking units. The braking units will then engage the brakes. This system relies heavily on the braking system operating correctly. Without the braking system operating as expected the pod will be unable to stop. Without the LV power system providing power, the pod will be unable to move as the brakes will automatically apply due to the *active low* configuration.

Propulsion System

The electronics subsystem is responsible for controlling the propulsion subsystem EMRAX 188 motor. To reliably launch, stop and accelerate the EMRAX motor, the PM100DX inverter will be used. To interface Arduino Due #3 with the PM100DX, an MCP2515 CANBUS Module will be used. Appendix AE4 contains the details on how the MCP2515 CANBUS Module interfaces with the PM100DX. Appendix AE5 contains the startup sequence for the PM100DX Inverter. Following the startup sequence in Appendix AE5 and the connection interface in Appendix AE4, the motor will reliably accelerate and decelerate and provide internal sensor readings e.g. operating temperature.

Control Systems Safety

As the control system is responsible for controlling the entire pod, safe control systems are critical to the overall safety of the pod. There are two aspects of safety in control systems; the integrity of the control systems design, and integrity of the control systems safety-critical software. In the following section, the safety considerations are outlined for both aspects.

There are three key elements in place to ensure the control systems detect unexpected behaviour in the pod to ensure safe operation.

Health Monitor: The health monitor receives data from every sensor on-board and continuously compares the readings against set parameters based on current safety standards. If there is a discrepancy between the actual value and the desired value, an error signal is fed into the FSM.

If the pod is in motion when the error signal is received, it is moved to the E-Stop state, which disengages the drive-train and vents the pneumatic brakes, bringing the pod to a complete stop quickly. Moreover, logged data is uploaded to the control panel in case of disk damage.

State Estimator: the state estimator receives sensor data and performs various calculations to estimate the pod's current position, velocity and tilt. As before, these values are compared against set parameters, and in case of a discrepancy, an error signal is sent to the FSM which then moves to the E-Stop state.

Channel Handler: The system design relies heavily on fast communication between various parts of the pod. If the communication channel between any two devices fails, a large safety risk is created. To account for this, the communication monitor ensures all devices are turned on and transmitting data. If this check fails at any point, the pod is moved into the E-stop state.

In the event that the Odroid itself fails, the Arduino responsible for controlling the motor and brakes will detect the lack of communication from the control system. It will then engage the brakes, bringing the pod to a complete stop.

Controls Systems Safety-Critical Software

Proper testing and validation procedures are central to developing safety-critical software. We aim to test our software at two levels of granularity: the individual modules that make up the program and the overall control system itself.

Individual Modules: It is necessary to isolate and test the functionality of the smaller modules that make up the program before testing the system itself. To allow for a continuous integration workflow, we aim to implement unit testing along with a strict version control system.

Staying with the modular approach, every part of the program is developed in an isolated version of the code, and once finished, goes through various automated tests to verify the correctness of the code. Once all the tests are passed, the code is reviewed by team members, who check for readability. The code is then merged with the stable version.

This method allows for bug fixing early in the development cycle, and generates an efficient workflow where there is no wait time required for testing[7]. Once the entire system has been built, and every module has been tested, we can start verifying the functionality of the overall system.

Control System: It is critical to ensure that the control system is sensitive to all incoming data, can make appropriate decisions/state transitions and can communicate results to the output quickly. To test this functionality before the pod is actually running on a track, we use a hardware-in-the-loop (HIL) testing approach.

[7] Cheon, Yoonsik and Leavens, Gary T., "A Simple and Practical Approach to Unit Testing: The JML and JUnit Way" (2001). Computer Science Technical Reports. 181

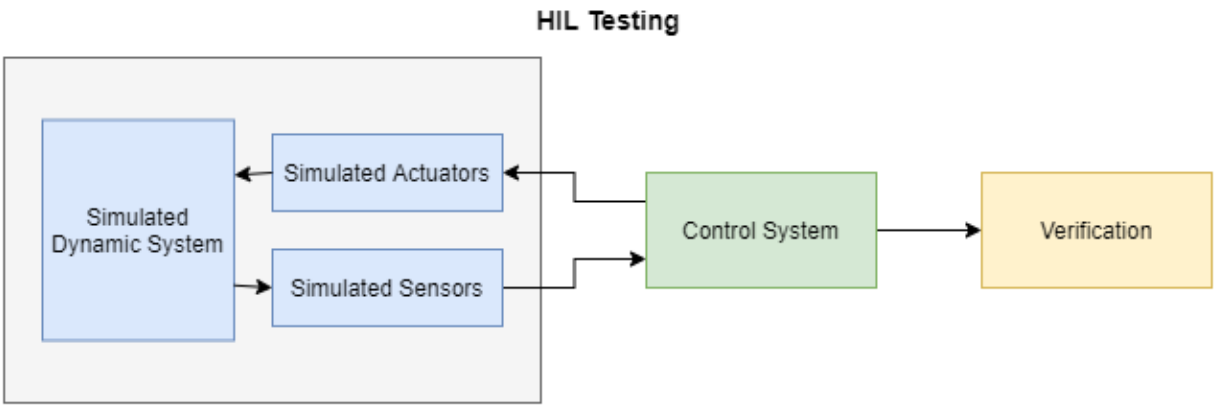

Figure E6: an overview of the HIL testing procedure

We aim to completely isolate the control system, replacing the normal I/O with I/O that is simulated using various mathematical models. Due to our software's modular design based on ZCM communication infrastructure, it is a relatively easy task to connect the control system to an interface that emulates a pod in real life. With this method, we can test a plethora of possible scenarios in minimal time and no cost.

The quality of the simulation used to generate the I/O is important. We plan to use Simulink Real-Time, a well-known modelling and simulation environment developed by MathWorks[8]. With an accurate model, and using fault insertion, we can even simulate various 'edge cases' that may occur to increase the rigour of testing.

The primary risk for the low-level control system is stopping the pod in the event of an emergency. It's essential that Pod 1 operates safely rather than being unable to run. To ensure the pod is safe, we have focused on the ability to engage the brakes to decelerate. We have currently have plans accounted for the following errors:

- **Power Loss/Failure**: due to the active low configuration the brake solenoid valve will automatically engage the brakes on the event of power loss/failure
- **Communication Infrastructure Loss/Failure**: in the event the communication handshake fails, Arduino Due #3 will use the brake solenoid valve to engage the brakes.
- **Error with Arduino Due #3**: Using the external communication system, the LV power system of the pod can be cut off externally which would result in a power loss, engaging the brakes.

[8] "Simulink Real-Time". *Mathworks*. [Online]. Available: https://www.mathworks.com/products/simulink-real-time.html. [Accessed: 13-Dec-2020].

These errors will be rigorously tested in a test bench environment, running through these situations and verifying the control system operates as expected before implementing the system on the pod.

APPENDIX

Appendix AES: Energy Systems Detailed Description

Energy Systems Overview Diagrams

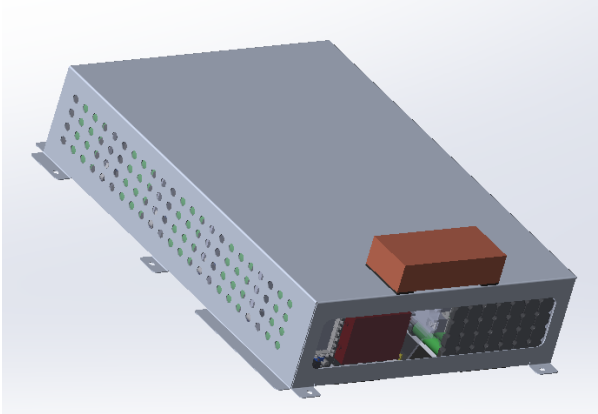

Figure ES2: HV Battery

Figure ES3: PM100DX Inverter

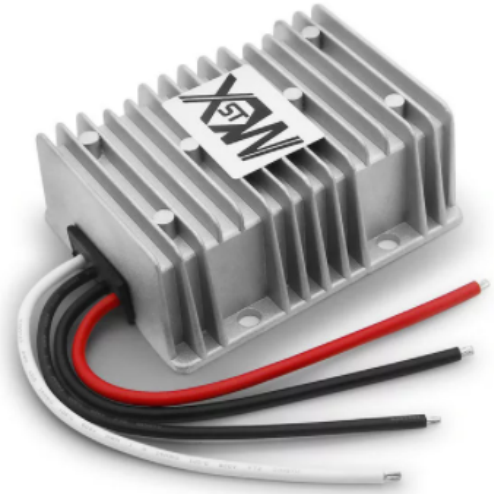

Figure ES4: LV Power Converter

Figure ES5: ISDT Q8 Balance Charger

LV Power System

The LV Power System is composed of a LV battery system and a LV power distribution system. The LV battery provides power to the LV power distribution system which then provides power

for all the electronics on the pod. A high level overview of how the system works is shown in Figure ES6.

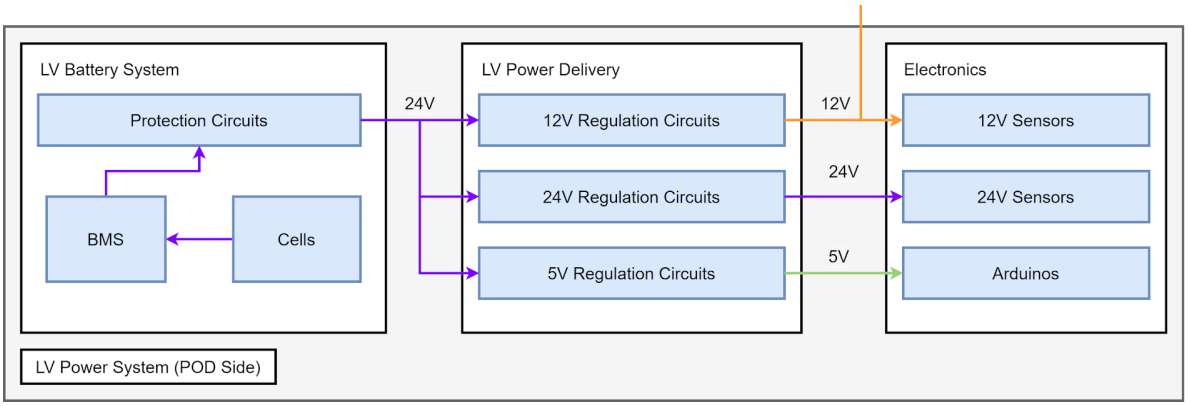

Figure ES6: A high level overview of the low voltage power system

LV Battery System

The low voltage battery systems team focuses on integrating a battery management system (BMS) to the low voltage battery (24V). This BMS will work to prevent the cells that make up the battery from becoming unbalanced. Additionally it also protects the battery when in use and discharging by monitoring the cells and preventing them from being damaged by over-discharging. Finally, the battery will be connected to an Arduino Nano which will have multiple temperature sensors in order to monitor the temperature of the battery and halt charging/discharging if the temperature exceeds safe limits.

The system will consist of seven main components:

- Cell Array of Samsung INR 18650 25R Cells
    - 6S2P Configuration
    - 24V Nominal
- Battery Management System
- Arduino
- Analogue Temperature Sensors
- Relay
- Step Down Converter
- Buck Converter
- XT-30 Connector

The size of the major components are given in Table 3. The dimensions of the final arrangement were scaled up by 1.5 times in order to account for other small components as well as provide a tolerance. The LV battery system will be housed within a 3D printed plastic box.

Table 3: Dimensions of major components of the energy system

Major Components	Dimensions (mm)
4-cell battery holders	80x76x18
BMS (20A)	34x59x9
Arduino	18x45
Total Estimated Dimensions	120x230x27

Figure ES7 depicts the general appearance of the system as well as all of the connections that will be required.

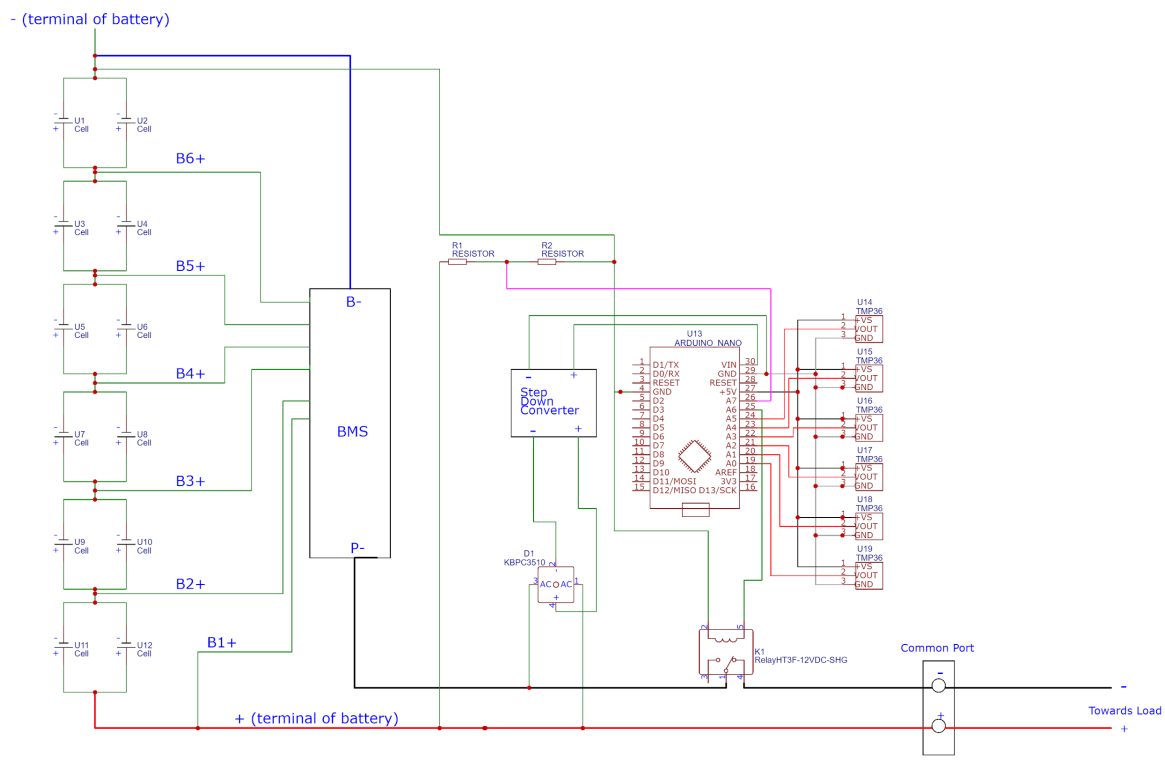

Figure ES7: Diagram depicting all connections required for the Battery Management System

The Low Voltage Battery Pack will be feeding power into all of the sensors. So, it will need to be connected to these components after it is integrated with the BMS. It will do this by providing power to the low voltage power distribution system which is a harness that converts the 24V power of the Low Voltage Battery into the respective 24V, 12V and 5V rails.

The LV Battery will be connected to the LV power distributions system within the pod. It will provide power to all the electronics, the main flight controller and inverter controller, all of which allow us to control the operation of the pod. The LV Battery simply outputs 24V of power and has built in protection to shut itself off in the event of undesirable conditions such as overheating.

The charging system will need to be operational to charge the battery whenever it runs dead. The charging system does not need to be active while the battery is active and in the pod.

LV Battery Safety

The highest safety risks will occur when interacting with the battery directly. Such as when connecting the BMS to the main terminals of the battery as this is where the voltage is highest; or when connecting the balancing wires to each parallel group of cells in the battery. In order to ensure the safety of these connections, extra care will be put in when connecting the cells to these balancing leads to ensure a proper connection is made. An Arduino Nano connected to TMP-36 temperature measuring diodes will monitor the temperatures of the cells and ensure the prevention of overheating of the batteries

In order to test the battery management system a test will have to be done while the battery is being charged to determine if it can properly balance each of the cells. This will be done using a multimeter or a voltmeter to check the voltage of the battery through both the charge and discharge wires. The battery will also be tested under a test load, similar to the actual load to ensure that it provides the required voltage. It will be checked for heating under operating conditions using an infrared laser thermometer. The battery is not expected to heat up too much and stay within the 35-50C range.

LV Power Distribution System

This system is connected to the LV battery system, which then converts the 24 V from the battery to 3 different voltage rails (24V, 12V, 5V) by using boost buck converters. It is designed to provide power to all the electronics in the pod at the rated voltage that they can take. It is responsible for converting the power from the LV battery into the corresponding appropriate voltage that each electronic component can receive.

Table 4: Converter Specifications

	24V boost/buck converter	**12V buck converter**	**5V buck converter**
Dimension	74*74*32 mm	74*74*32 mm	46*32*18 mm
Input Voltage Range	9-36 V	9-36 V	8-22 V

Output Current	2A	8A	10A
CAD model	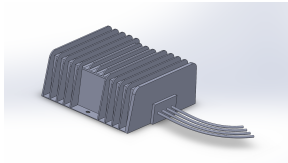	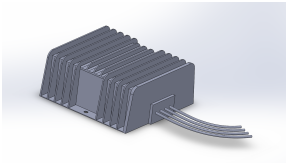	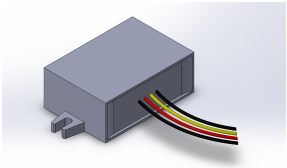

The LV power distribution system converts and distributes power to all the sensors, arduinos, main flight controller and the inverter controller. An XT-30 connector will be used to connect the LV battery to the LV power distribution system. The connectors will have the input power wired in parallel. The LV battery needs to be operational in order for this system to run.

LV Power Distribution System Safety

The key elements within the LV power system are the 6S2P battery pack as well as the Battery Management System (BMS) it is connected to. Owing to the fact that we will be using lithium ion cells in our battery pack, care will be taken to ensure these cells are stored and used safely. So, these cells will be:

- shipped with protective packaging,
- stored away from combustible materials,
- stored at temperatures between 5C and 20C,
- kept away from direct sunlight or hot surfaces,
- encased in a protective housing with vents,
- kept away from contacting conductive materials,
- left to cool after usage to prevent overheating,
- separated by dividers to protect a potential failing cell from spreading to neighboring cells,
- separated according to degree of usage (the old cells must be kept separately from the new cells)
- handled with personal insulating protective equipment on.

The battery management system selected should also have additional features to mitigate the safety risks that these batteries pose. This component should be able to detect cells with over temperature, over voltage, over charge/discharge or short-circuit and respond by disconnecting the circuit. Prior to EHW 2021, the performance of the batteries and converters will be tested to ensure they function well and do not pose safety risks to the operators. Some tests are outlined in Table 5.

Table 5: Performance tests for the components of the LV Power System

Component	Test	Target
Battery Cells	The voltage of each fully-charged battery cell will be measured with a voltmeter to determine the output voltage of each battery.	Voltmeter reading of 4.2V
	A multimeter will be used to measure the capacitance of each battery cell to gauge the cell's state of health.	Multimeter reading of 2500mAh
Converters	For each converter, a higher input voltage will be supplied and the output of the converter would be measured to check its ability to convert the voltage to the desired values.	Voltmeter reading of 5V for 5V Buck Converter
		Voltmeter reading of 12V for 12V Buck Converter
		Voltmeter reading of 24V for 24V Boost-Buck Converter

HV Power System

The HV Power System is designed to provide power for the Emrax motor onboard the pod and will allow the propulsion subsystem to propel the pod forward. A high level overview and diagram of how the HV Power System works is shown in Figure ES8. The HV Power System is made up of:

1. HV Battery System
2. Inverter
    a. Inverter Cooling System
    b. Inverter Pre-charge circuit

The inverter has an onboard controller that is controlled by arduino #3 via CAN BUS. It converts the DC power from the HV Battery into 3 phase AC power in order to drive the EMRAX motor. The onboard inverter control system handles the frequency modulation of the conversion of the high voltage power and the arduino simply has to provide the desired rotational frequency.

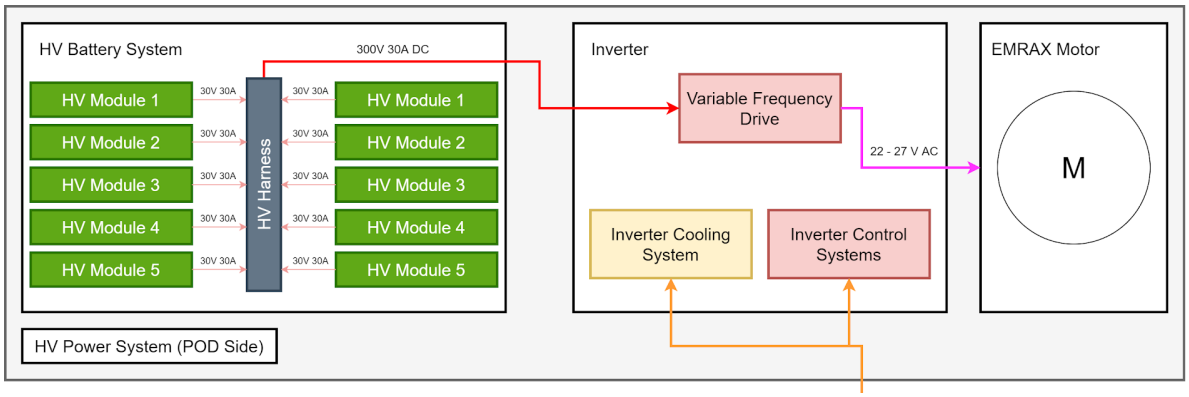

Figure ES8: A high level overview of the high voltage power system

HV Battery System

This system is a HV battery pack providing nominal 252V and 60A to the inverter. It is made up of 10 individual HV Battery Modules connected in series to make a complete 70S4P battery pack. The modules are connected together using a HV power bar, which is fitted with 10 XT-90 connectors in series, and the entire power bar is connected to the pre-charge circuit, which feeds the power into the inverter.

Each HV module is made up of a 7S4P cell configuration, and is rated at 30V and 80A max, with its own battery management system. The 7S4P cell configuration is made up of 7 Li4P25RT modules from energus connected in series, each of which are equipped with 2 point temperature sensors. A BMS in each module provides balancing, overcharge, over discharge and overcurrent protection to the cells. An arduino nano in each module monitors the temperature of the cells and provides control of the modules connection to the load/charge in order to prevent overheating. The arduino also provides real time monitoring of battery State of Charge (SOC).

When the modules are connected together in the pod, the arduinos have their own connection line within the power bar and are daisy chained together. The arduinos all report max temp and SOC to the arduino in the first module in the stack. This first arduino acts as the master arduino and reports SOC and any key battery information and events to an arduino within the pod's electronics subsystem.

Each HV module is around (176mm x 102mm x 101mm) and the entire HV battery when assembled is around (515mm x 367mm x 112mm). The image of the module and battery are shown in Figure ES9, and Figure ES10 respectively. There are 10 HV modules in the battery and the components of each HV module are listed in Table ES4.

Table ES4: Table of HV Battery Module Components

Component	Image	Description	Quantity
Li4P25RT Cell Module		A pack of 4 Samsung 25RT 18650 cells connected in parallel. Each cell is double fused and there are 2 temperature probes in each module.	7
DALY 7S 24V 60A BMS		7S 24V 60A BMS. 180A peak current, rated for 7 cells in series	1
Elegoo Arduino Nano	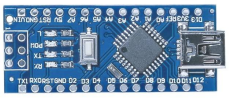	An arduino nano	1
LM 2596 DC-DC Buck Converter		30V to 5V buck converter	1
3D Printed Shell	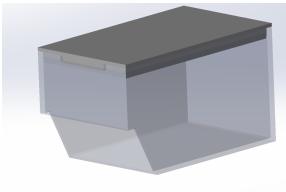	A 3D printed Shell and Lid to house the HV Battery Module components and cells	1

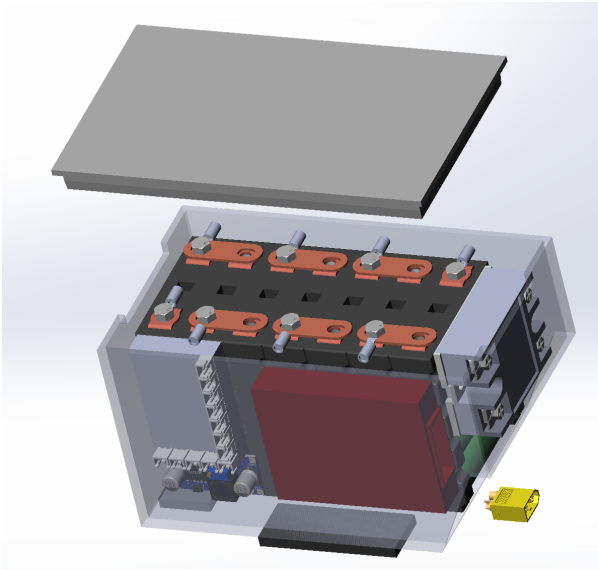

Figure ES9: HV Battery Module

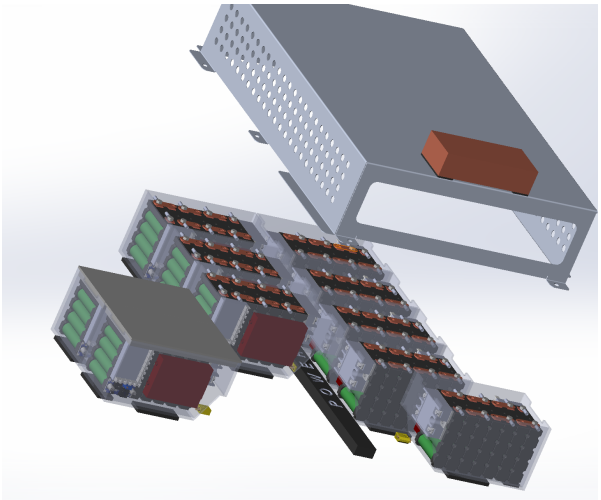

Figure ES10: HV Battery (Exploded)

The HV battery system will be a part of the HV power system. It will be connected via a 10 gauge cable to the inverter via the pre-charge circuit system. When the pod is not in use, the HV battery modules can be removed individually and plugged into the ISDT Q8 charge controller as part of the charging system to be charged.

The HV battery modules will be connected together via the powerbar. The HV battery will be used to power the inverter and in turn the Emrax motor. It will operate at a nominal 252V and 60A during the demonstration. When the batteries have been discharged, they will require a mains power supply in order to power the charging system that will charge them.

The inverter control systems, that is the arduino controlling the inverter, and the software subsystems need to be in operation in order to operate the system. Otherwise, the HV battery modules are all self-sufficient

HV Battery Safety

When using lithium ion cells at high currents, there are risks of overcharge, overdischarge, over-current, and temperature concerns which can all result in a thermal runaway of the cells. In order to combat these, each module is equipped with a Battery Management System (BMS). This protects each cell from being overcharged, being over discharged and balances the cells too. The BMS also has over-current protection, which protects the cells and the system in the event of a short circuit. Each Energus Li4P25RT module is also equipped with 2 point temperature sensors, and the onboard arduino is constantly monitoring these temperatures, and will disconnect the cell

from the circuit if the cell temperatures are ever unfavourable. Furthermore, each cell is double fused to protect it and the rest of the system in the event of a short.

A further layer of protection has been built into the design of the HV battery in that each module can be charged individually. This allows us to charge the HV battery under much safer conditions, as each 30V module can be charged individually at a much safer 500W.

The cells will each be tested for their voltage when charged up to ensure that they are all reading the correct top voltage. Additionally, each HV module will be tested under its rated load of 30V and 60A continuously, several times, in order to ensure its reliability. During this time, temperature data and power drain of the cells will be monitored and recorded. The modules will also be assembled into the entire HV battery and will be tested under its rated load continuously until it is drained, and the same tests and monitoring will be performed on it. Furthermore, each BMS will be tested to ensure that its functionality of overcharge, overdischarge and over current protection are all working. The arduino system will also be tested extensively, to ensure that it cuts the battery module power when the cells reach a specified temperature limit.

Inverter Pre-Charge System

The pre-charge system protects the inverter when a connection to the HV battery pack is made by limiting peak inrush current. Table ES5 lists the key elements used in the pre-charge system.

Table ES5: The pre-charge system's key elements

Component Name	**Component Image**	**Component Description**	**Mfg. Part No.**
Main fuse		400A, 700VDC, semiconductor fuse	Bussmann FWP-400A
Pre-charge fuse		5A, 500VDC	

Pre-charge resistor		600 ohm, 50W	
Pre-charge relay		SPST, 50A, 1200VDC, 12VDC coil	
Main contactor		SPST, 500A, 900VDC, 12VDC coil	Gigavac GX14BA

When the inverter is first powered on, it will engage the pre-charge relay to charge its internal capacitors. The pre-charge resistor is sized to quickly charge the internal capacitors, but not dissipate too much power if the inverter's input was shorted. The 5A fuse in series with the pre-charge resistor is added for additional safety protection. If the capacitors charge properly, the main contactor will engage. While the main fuse is not technically part of the pre-charge circuit, it is located in the same housing for simplicity of wiring.

Operation of System

The pre-charge circuit is a subordinate system integrated with the inverter. Its successful integration is key to ensuring the inverter works as intended and is not damaged by the inrush current. DC+, J2-21, and J2-7 connections must be securely connected to their respective components in the pre-charge system as per the schematic in Figure XXX. To operate the pre-charge system, the HV Power System, LV Power System, and inverter must be running.

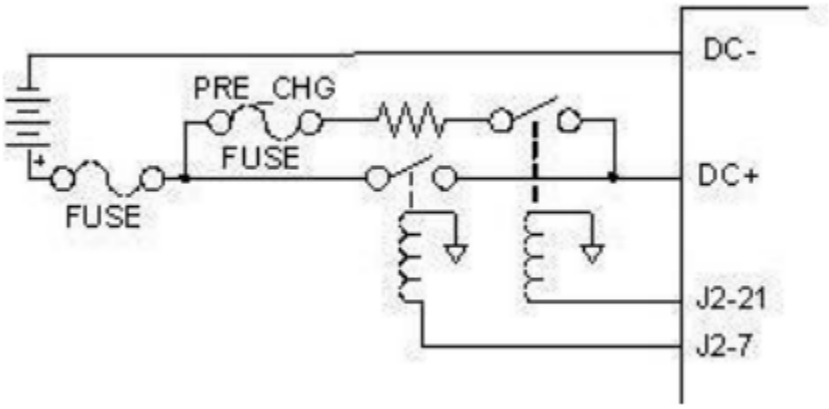

Figure ES11: The pre-charge system's schematic in relation to HV battery pack and inverter

Safety

Given the critical role the pre-charge system plays in protecting the inverter, components must be tested beforehand. The main contactor can be tested by applying its coil voltage of 12V and hearing for a click, indicating the electromechanical relay has been engaged. A multimeter set to check for continuity can also be used to check if the contactor relay has closed. A similar testing procedure can be done to check the pre-charge relay. A visual inspection of all components and connections checks for signs of physical damage, misplaced connections, or loose wires. Unfortunately, there is no method of testing the fully assembled pre-charge system in isolation - short of tearing apart and reverse engineering the inverter, there is no way of replicating its capacitor charging sequence and logic with respect to the HV battery pack. A standardized assembly and operating procedure will be created before final assembly of the pre-charge system and integration with the inverter to minimize risks of failure. The highest safety risk is posed when the pre-charge circuit is being connected to the HV battery pack. To prevent accidentally shorting the HV battery pack, the negative lead will be physically and electrically insulated.

Inverter Cooling System

The inverter cooling system is designed to adequately remove heat from the inverter and to maintain the inverter at safe operating temperatures. The method of heat transfer between the coolant and inverter will be via conduction occurring inside the inverter's heat transfer surface. The coolant used will be 50/50 ethylene-glycol and water. The system is driven by a pump which will supply the coolant to the inverter, supplemented by a temperature and flow sensor, and finally an overflow tank filled with coolant which will act as an additional heat sink as well as coolant storage. As the pod is designed to operate in near-vacuum conditions, it is designed to be

able to maintain the inverters temperature within safe limits for a flight time of 4 minutes without the use of a radiator. The system is designed to also work with an add-on radiator cooling loop for open air runs. At the EHW, the system will be operating under open air conditions and so the radiator cooling loop will also be connected. Figure ES12 summarizes the cooling system in a simple block diagram. Figure ES13 will include the radiator within the cooling system and Figure ES14 shows how the radiator will look.

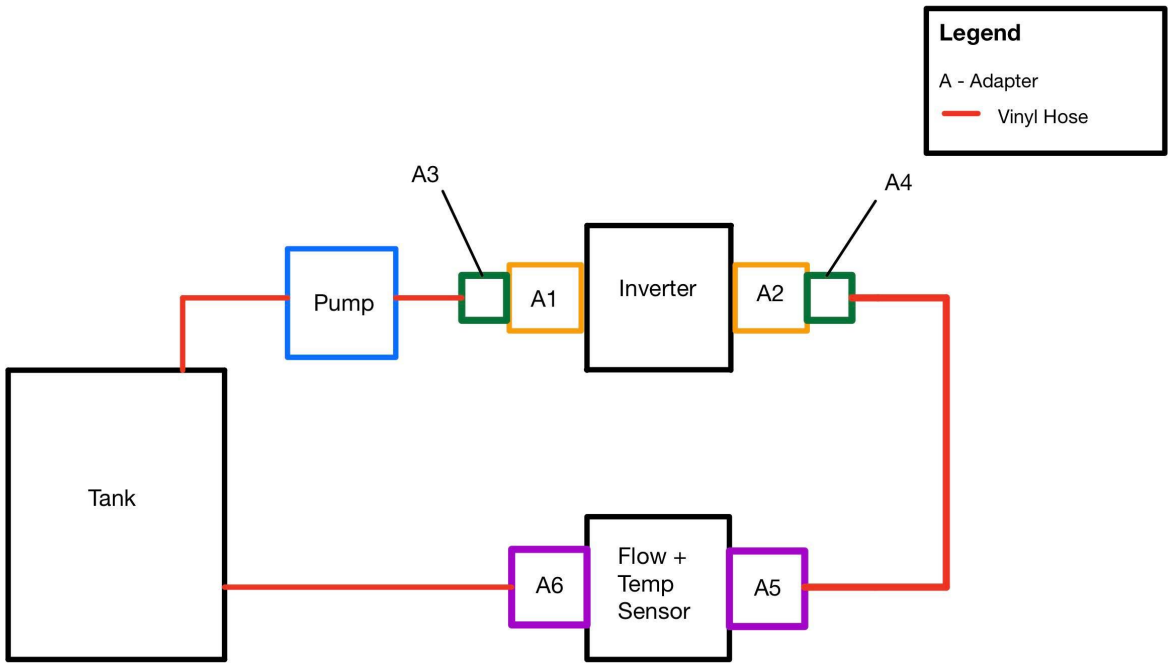

Figure ES12: Block Diagram of Cooling System Layout and its Components

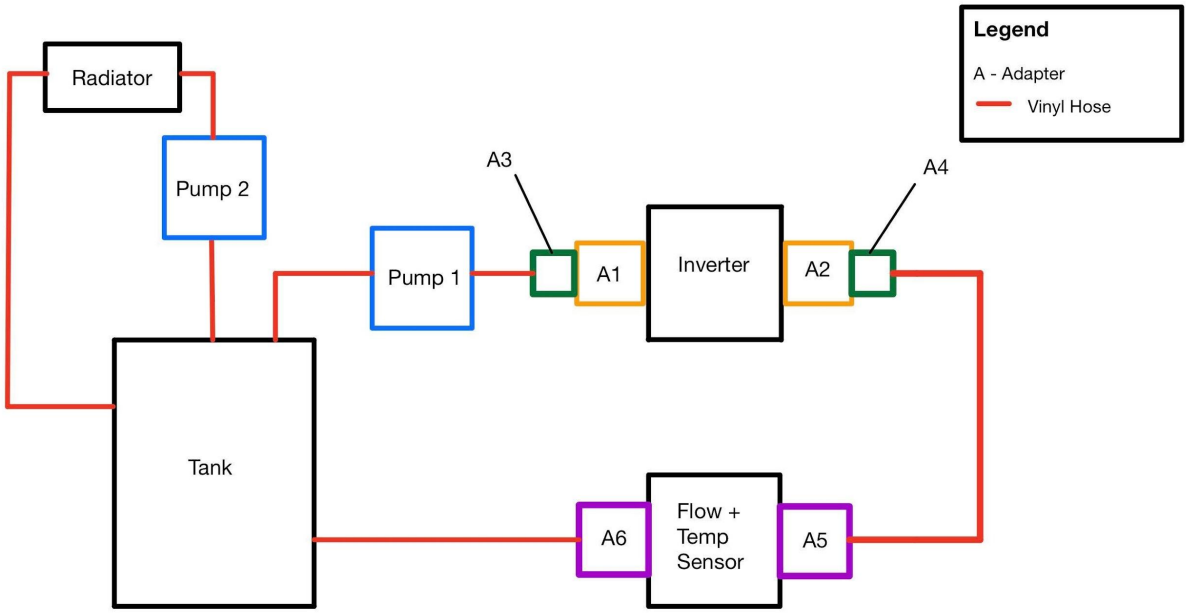

Figure ES13: Block Diagram of Cooling System Layout With Radiator

Figure ES14: Proposed Radiator to be used with Cooling System

The whole cooling system is modular and consists of mainly small sensors and hoses which connect the whole system together. The tank holds 4 liters of liquid and the pump to be used is a 240 gram brushless pump, using up minimal space. The temperature sensor is around the same size as the pump as well. The cooling system is to be modular and its objective is to be of as minimal disturbance to the rest of the pod as possible. Therefore, its components will be integrated with the rest of the pod once construction is completed, with the distinct features of the tubing connecting the system together. Adapters will be fitted on each end of the tubing for easy connect and disconnect, as well as making connections to different parts of the cooling system easy to do. Figure ES15 shows each of the adapter connections laid out in similar fashion to Figure ES12.

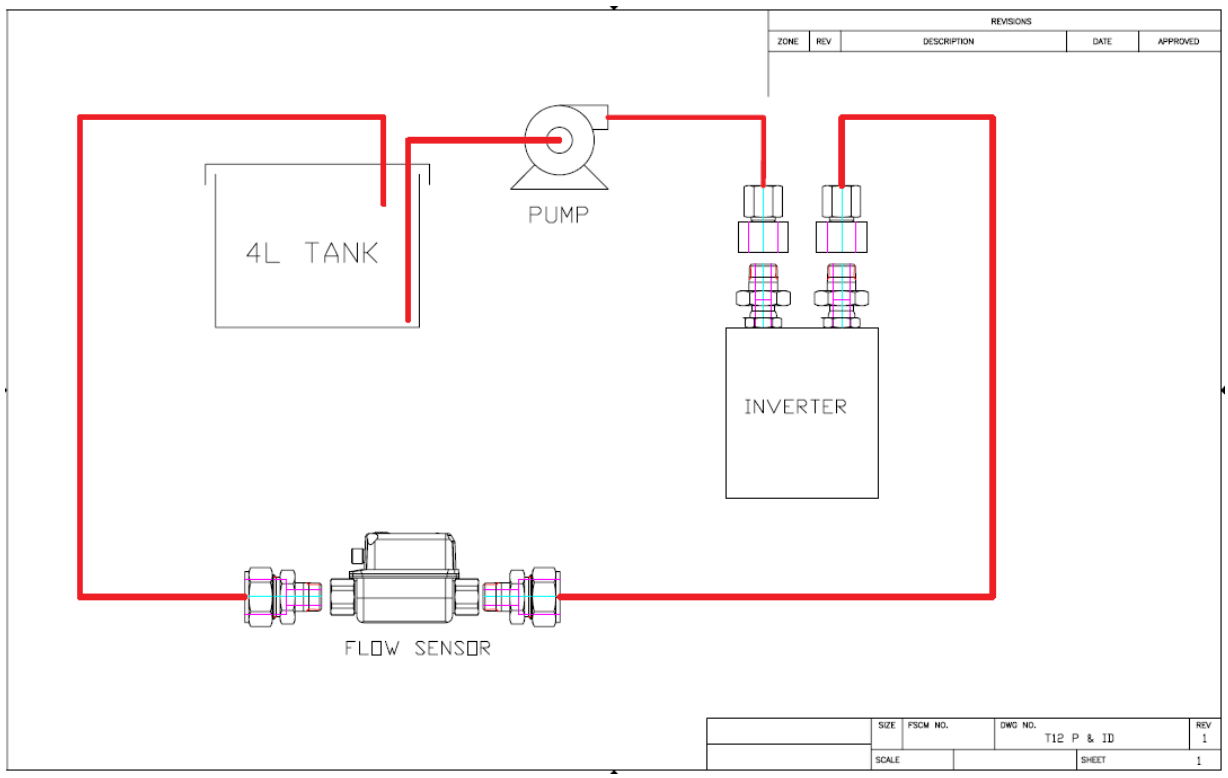

Figure ES15: Detailed Schematic of the Cooling System with Adapter Connections

The tubing that connects the system together will have an I.D. of ¾" and of vinyl material as it is flexible and available to be cut to length. The chosen temperature sensor is integrated with the flow sensor, simplifying the assembly of the cooling system. As mentioned above, the cooling system is designed with the objective to create minimal disturbance to the rest of the pod.

Operation & Demonstration

To operate the cooling system, all of the components (pump, radiator fans, flow sensor) will be wired and powered properly, as well as primed with coolant. The system will operate with or without the inverter being turned on, as the only control variable to its operation is the pump itself. As the cooling system is completely modular, it can be run in a 'test bench' type mode where the system is rerouted to test the efficiency of the cooling system in an isolated system. To test the heat transfer that occurs in the system, the inverter is required to be on and generate heat similar to flight time to demonstrate the ability of the cooling system.

Safety

The key elements of the cooling system are the inverter, temperature and flow sensor, the pump and the overflow tank. Since this system has liquid travelling through its components and will be operating at high temperatures, it is important that every component is rated for the operating temperature range. Additionally, ensuring that each adapter is properly sealed to prevent leaks

and loss of heat transfer medium is crucial in preventing system failure. The failure of the temperature and flow sensor is less important as it will not cripple the function of the system. However, the system will enter shutdown mode in which the inverter will shut off, but the power to the pump will remain to continue the flow of coolant to the inverter. The pump poses the highest safety risk as it is the only control variable in controlling coolant flow, as well as the amount of heat transferred from the inverter to the coolant. If the pump power is compromised or the pump fails, then the inverter has a possibility of overheating and causing the failure of the pod. Additionally, no secondary method exists for heat to be removed from the inverter.

To test the cooling system, it will be set up in 'test bench' mode where it will be stressed with the inverter running at high heat and measuring the amount of heat that the cooling system can remove over several test runs, without changing the coolant. Retaining the same coolant will decrease the temperature gradient between coolant and the inverter, thus allowing us to test what the effects of prolonged use of the pod will be.

Charging System

The charging system charges the high- and low-voltage battery modules that power the hyperloop pod. After the high- and low-voltage battery modules have been discharged, removed from the pod, and cooled down to room temperature, they can be re-charged using the charging system. The charging system consists of a server power supply unit (PSU) that converts from AC to DC (detailed specifications below), and a balancing charger that uses the output of the PSU to charge the battery cells. The charger allows the user to specify the charging current and voltage and charge the battery at a constant-current, constant-voltage (CC-CV) charge profile. Moreover, if the competition location has a mains electricity and/or a socket type that differs from the PSU input requirements, a transformer and/or a plug adapter will be used in conjunction with the PSU. The charging system is equipped to be able to charge both the LV and HV battery modules using the same set-up.

The charging system consists of a power supply and a balancing charger.

- **Power Supply Unit (PSU)**
    - **Model**: HP DPS-750RB A
    - **Dimensions**: 23.8cmX3.8cmX8.6cm
    - **Specifications**: Input: 100V-240V ~/ 9.0A-4.5A, Output: 750W (MAX)
        - +12.0V -- / 62.5A
        - +12VSB (Voltage stand by) -- 2.5A
- **Charger**
    - **Model**: ISDT Q8 Balance Charger
    - **Dimensions**: 8cmX8cmX3.3cm
    - **Specifications**: Max input current: 20 A, Input voltage: DC 10-34V, Output voltage: DC 1-34 V, Balance current: 1.5A/cell maximum, Charging current:

0.1-20 A, Discharging current: 0.1-1.5A, Max charging power: 500 W, Max discharging power: 15 W, Supported battery types
and cell count: LiFe 1~8S, Li Ion 1~8S, LiPi 1~8S, LiHv 1~7S, Pb 1~12S, NiMH/Cd 1~16S (S meaning in series)

- Other Components
  - **Connectors**:
    - **XT90 Connectors**: These were used to connect components of the charger to our batteries
    - **Adapters**: These will be required for plugging into european power sources due to unavailability of type-B socket types in Europe.

Figure ES16: Image of our power supply (HP DPS-750RB A)

Figure ES17: Image of our charger (IDT Q8 Balance Charger)

The charging system requires the EHW to provide an outlet that works for the input requirements of the PSU (120-240V, 60 Hz) and a Type B plug adapter, if applicable. UTHT will be responsible for the rest of the required infrastructure, including the PSU, the charger, and any connectors.

Note that the charging system operates independently of the other energy system components. The charging system charges the battery modules that have been discharged, removed from the pod, and cooled down to room temperature.

Safety

The key elements of the system are the power supply, batteries, and charger. The power supply incorporates the highest safety risks. Safety considerations when handling the power supply include preventing electric shock by avoiding dropping conductive clippings onto the power supply, wrapping the power supply in fish paper to help with electrical insulation, and not touching any terminals.

The operating environment for power supply should meet the following conditions[9]: power supply should not be placed in direct sunlight; follow the rated operating temperature, operating humidity, and storage temperature; do not exceed vibration and shock resistance limits; "do not use the Power Supply in locations subject to excessive amounts of dust or where liquids, foreign matter, or corrosive gases may enter the interior of the Product"; and "install the Power Supply well away from devices that produce strong, high-frequency noise and surge."

Considerations for the storage of the charger will also be adhered to. This includes avoiding dust, humidity, rain, high temperatures, direct exposure to sunlight, intense vibration, contact with flammable objects, and contact with explosive objects. All system elements will be stored on surfaces that are heat-resistant, non-flammable, and insulating.

The charging system will be thoroughly tested prior to EHW 2021. We will collect data such as charging profile, time to full charge, and temperature while charging LV and HV battery modules under room temperature and under different combinations of current and voltage. We will monitor the actual current/voltage of the battery and compare that to the expectation (displayed on the charger).

[9] "Safety Precautions of Power Supplies Cautions for Power Supplies: OMRON Industrial Automation," *OMRON*. [Online]. Available: http://www.ia.omron.com/product/cautions/22/safety_precautions.html. [Accessed: 13-Dec-2020].

Appendix AE: Electronics & Software Detailed Info

AE1: Primary and Auxiliary Sensors

AE1.1 Primary Sensors

Temperature Sensor - ProSense RTD0100-06-010-H[10] (x3)
Inputs: Power: 20-32 VDC Communication: 4 Pin M12 Disconnect
Output: 4-20 mA directly proportional to the reading over the range of -40 to 300 degrees Fahrenheit
Dimensions: ProSense RTD0100-06-010-H: length 160 mm, diameter 6 mm ProSense TTD-20-N40300F-H[11] (transmitter): 51.9 x 25.0 x 18.0 mm ProSense RTDTW-06-010-50N[12] (thermowell): length 113 mm, diameter 9 mm
Function: Temperature readings of critical components to ensure the pod is running under expected conditions. This will be used to determine the "health" of the pod and may influence critical operations, e.g. reducing motor power or emergency stopping if the motor overheats. There will be three primary temperature sensors on the pod. The first one will be located near the front and will monitor temperature of the front wheel. The second will be in the center of the pod. This is where a bulk of the electronics are located including the master computer and pressure sensors. Most importantly this centrally located temperature sensor will externally monitor the batteries for abnormal temperature spikes. The last sensor will be located near the back wheel.   Figure AE1.1.1: ProSense RTD0100-06-010-H

[10] Cdn.automationdirect.com, 2020. [Online]. Available: https://cdn.automationdirect.com/static/specs/psrtdprobem12cc.pdf. [Accessed: 13- Dec- 2020]
[11] Cdn.automationdirect.com, 2020. [Online]. Available: https://cdn.automationdirect.com/static/specs/psttdtemptrans.pdf. [Accessed: 13- Dec- 2020]
[12] Cdn.automationdirect.com, 2020. [Online]. Available: https://cdn.automationdirect.com/static/specs/psthermowellm12cc.pdf. [Accessed: 13- Dec- 2020]

Accessories Used:

1. Prosense isolated temperature transmitter
- This component was recommended by the distributor to reduce noise measured by the temperature sensor due to its proximity to high voltage electrical components such as the motor and inverter. All 3 temperature sensors will be equipped with this isolation device.

Figure AE1.1.2: ProSense TTD-20-N40300F-H

2. Prosense Thermowell 113mm
- Cylindrical fitting used to protect temperature sensors. This thermowell will allow the sensor inside to withstand any acceleration or shock forces.

Figure AE1.1.3: ProSense RTDTW-06-010-50N

IMU - VectorNav (INS) VN200 Rugged[13] (x1)
Inputs: Power: 3.3 VDC, 80 mA draw @ 5 VDC. Max power consumption 220 mW Communication: Serial TTL
Outputs: Euler angles (Yaw, pitch roll), acceleration, angular rate, magnetic field, pressure filtering
Dimensions: VectorNav VN200 Rugged: 33.9 x 35.9 x 9.5 mm M80-4861005 (connector): 12.70 x 20.00 x 6.65 mm

[13] "VN-200 GNSS/INS". *VECTORNAV*. [Online]. Available: https://www.vectornav.com/docs/default-source/datasheets/vn-200-datasheet.pdf?sfvrsn=e1a7b2a0_5. [Accessed: 13-Dec-2020].

Function:

Industrial grade 3 axis accelerometer, gyro, and magnetometer along with a pressure sensor and 32-bit processor. This will be used for navigation of the pod and will have an associated control system. Equipped with a 50-channel L1 GPS receiver and Kalman filtering algorithms to account for drift (integration errors) when calculating position of pod. This sensor will act as the primary location device of the pod. We will rely on the IMU data about the pod's speed, acceleration, and initial position to make decisions on accelerating and braking. In the presence of light strips similar to the SpaceX Hyperloop Competition, the light strips will be used in addition to the GPS receiver to account for drift.

Notes:

In the event that the pod is required to operate in a tube, additional tests will need to be done to ensure that the GPS module receives adequate signal for drift correction. If the GPS signal is weak or unusable, this device can be used as an IMU and will no longer act as the primary distance measuring sensor for the pod. Additionally, the mount for the IMU will include vibration dampening springs to minimize noise from any vibrations on the pod.

Figure AE1.1.4: VectorNav VN 200 Rugged

Accessories Used:

1. M80-4861005 Connector

- This is the mating connector required for serial communication with the VN200. The pins split off into wires bridging the connection between the Arduino Due and the sensor.

Figure AE1.1.5: M80-4861005 Connector

DC Hall Current Sensor - AcuAMP DCT500-42-24-F[14] (x1)
Inputs: Power: 24 VDC
Output: 4-20 mA directly proportional to the reading over the range of 0 to 500 Amps DC
Dimensions: AcuAMP DCT500-42-24-F: 104.9 x 76.2 x 82.6 mm
Function: This sensor will read the DC current from the high voltage system before it is fed to the inverter. Reading current here allows the team to monitor values for safety and assess the output capabilities of the battery pack. This sensor is able to read up to 500 Amps and will produce an output of 4-20 mA that is proportional to its readings.   Figure AE1.1.6: AcuAMP DCT500-42-24-F

Pressure Sensors: **SPT25-20-0200A[15] (x2)** **SPTD25-20-1000H[16] (x1)**
Inputs: Power: 8.5 - 36 VDC Communication: M12 quick-disconnect electrical connection
Output: 4 - 24 mA analog directly proportional to the pressure reading range
Dimensions: SPT25-20-0200A: length 49.9 mm, diameter 27.0 mm SPTD25-20-1000H: length 66.9 mm, diameter 18.9 mm
Function:

[14] "DCT Series DC Current Transducers". *ACUAmp*. [Online]. Available: https://cdn.automationdirect.com/static/specs/acuampdct.pdf. [Accessed: 13-Dec-2020].
[15] "SPT25 Series Pressure Transmitters". *ProSense*. [Online]. Available: https://cdn.automationdirect.com/static/specs/prosensespt25transmitters.pdf. [Accessed: 13-Dec-2020].
[16] "SPTD25 Series Pressure Transmitters". *ProSense*. [Online]. Available: https://cdn.automationdirect.com/static/specs/prosensesptd25transmitters.pdf. [Accessed: 13-Dec-2020].

These sensors will read the pressures of the pneumatic braking system. Reading current here allows the team to monitor values for safety and assess the status of the braking system. The pod's internals will not be pressurized. The sensors range limitations within the braking system are listed below:

- 4 sensors that can measure 0 to 200 psig for the individual braking units
- 1 sensor that can measure 0 to 1000 psig for the main reserve tank

Figure AE1.1.7: SPT25-20-200A

Figure AE1.1.8: SPTD25-20-1000H

Gap Height Sensor - Wenglor Photoelectric OPT2002[17] (x1)
Inputs: Power: 18-30 VDC Communication: 8 pin M12 Disconnect
Output: 4-20 mA directly proportional to the reading over the range of 30 to 80 mm
Dimensions: Wenglor Photoelectric OPT2002: 50 x 20 x 50 mm
Function: A point of data collection during flight is to check vertical movement of the pod. Having a large vertical travel distance can indicate that either the track is uneven, the suspension needs tuning, or could also be due to loose components that are moving around. This distance sensor will measure the gap between the bottom of the pod's frame to the top of the I beam. There will be a control system associated with this sensor and its readings will be used to tune the

[17] "OPT Short Range (CMOS) Series Photoelectric Sensors". [Online]. Available: https://cdn.automationdirect.com/static/specs/perectoptcmos.pdf. [Accessed: 13-Dec-2020]

pod and emergency stop the pod.

Figure AE1.1.9: Wenglor Photoelectric OPT2002

Inverter Controller & Sensor - MCP2515 CANBUS Module[18]
Inputs: Power: 5 VDC Communication: SPI
Output: Measurements of the inverter
Dimensions: MCP2515 CANBUS Module: 41 x 39 mm (L x W)
Function: The CANBUS module establishes communication between the microcontrollers and inverter/motor. This allows us to control the torque of the motor by passing START or OFF state signals to the inverter. In order to monitor the health of the motor during its operation, sensor values from the motor such as the temperature and current will be collected through this bus.   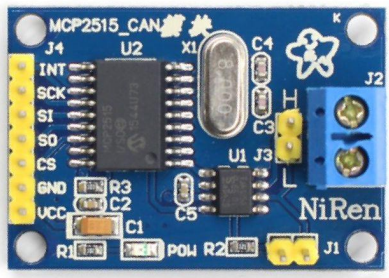   Figure AE1.1.10: MCP2515 CANBUS Module

[18] "MCP2515 CAN Bus Monitor Demo Board User's Guide". *Microchip*. [Online]. Available: http://ww1.microchip.com/downloads/en/devicedoc/50001757b.pdf. [Accessed: 13-Dec-2020].

AE1.2 Auxiliary Sensors

Telemetry IMU - MPU9250 Module[19] (x1)
Inputs: Power: 3-5 VDC Communication: I2C
Outputs: 9 axis measurements - accelerometer, magnetometer, gyroscope
Dimensions: MPU9250 Module: 25.5 x 15.4 mm (L x W)
Function: Secondary IMU - 3 axis accelerometer, gyro, and magnetometer will be used for vibration profiling for data collection. The electronics team currently plans to use this as an auxiliary sensor and not for real time decision making. By analyzing the data obtained from this sensor the team will be able to improve upon any stability issues and excessive vibrations. Mitigating vibrations is essential to ensure that readings from other sensitive sensors are as accurate as possible. In the future, the team may use the vibration data for possible emergency stop decision making.   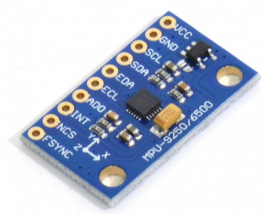   Figure AE1.2.1: MPU9250 Module

Temperature Sensor - TMP006 Contactless IR Temperature Sensor[20] (x1)
Inputs: Power: 3-5 VDC Communication: I2C
Output: Temperature reading of over the range of -40 to 125 degrees Celsius
Dimensions: TMP006 Module: 20.32 x 20.32 mm (L x W)

[19] "MPU-9250 Register Map and Descriptions Revision 1.6". *InvenSense*. [Online]. Available: https://invensense.tdk.com/wp-content/uploads/2015/02/RM-MPU-9250A-00-v1.6.pdf. [Accessed: 13-Dec-2020].
[20] "TMP006 User Guide". *Texas Instruments*. [Online]. Available: https://cdn.sparkfun.com/datasheets/Sensors/Temp/sbou107.pdf. [Accessed: 13-Dec-2020].

Function:

This secondary temperature sensor will not be connected to control systems, but rather will be used for analysis to observe zones on the pod that may get too hot during flight.

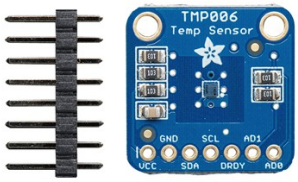

Figure AE1.2.2: TMP006 Contactless IR Temperature Sensor

AE1.3 Microcontrollers & Master Computer

Microcontrollers - Arduino Due[21] (x4), Industrial Arduino (x1)
Inputs: Power: 7-12V input, 3.3V operating
Output: 54 I/O pins to read various signal values from sensors
Dimensions: Arduino Due: 101.52 x 53.3 mm (L x W) Industrial Arduino: variable dimensions
Function: Microcontrollers will be spread out throughout the pod in order to connect to sensors in a localized manner. Each microcontroller will connect back to the master computer to ensure synchronization. Sensors will use the arduino to relay outputs. Power to the sensors will not be drawn from the microcontrollers, but rather the low voltage power system managed by the Energy Systems Team. This will prevent excessive load on any single microcontroller. The industrial arduino provides a robust and modular approach to microcontroller use. Functionality wise it will operate identical to the arduino dues, making use of the GPIO pins to communicate with sensors. The difference with this arduino is that it is rugged and shock proof, making it ideal for an application like hyperloop. It has various modules like ethernet shields, power supplies, and GPIO, making any future expansions simple. This new industrial arduino by AutomationDirect has an immense amount of applications and will serve as a key component for the electronics onboard.

[21] "Arduino Due," *Arduino Due | Arduino Official Store*. [Online]. Available: https://store.arduino.cc/usa/due. [Accessed: 13-Dec-2020].

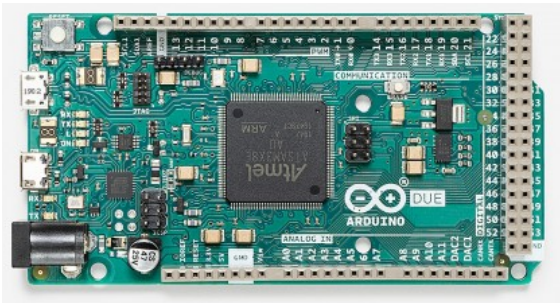

Figure AE1.3.1: Arduino Due

Figure AE1.3.2: Industrial Arduino with its power supply

Master Computer - Odroid XU4[22]
Inputs: Power: 5V 4A power supply
Output: N/A
Dimensions: Odroid XU4: 83 x 58 x 20 mm
Function: Centralized computer connected to the peripheral arduinos. Carries out the centralized computing and interfaces with the other microcontrollers. Multiple processes carried out at once such as radio communication as well as processing sensor requests. 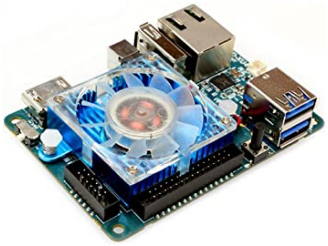 Figure AE1.3.3: Odroid XU4

[22] Magazine.odroid.com, 2020. [Online]. Available: https://magazine.odroid.com/wp-content/uploads/odroid-xu4-user-manual.pdf. [Accessed: 13- Dec- 2020]

AE2: Complete Wiring Diagrams for Sensor Integration

AE2.1 Printed Circuit Board #1 Wiring Diagram

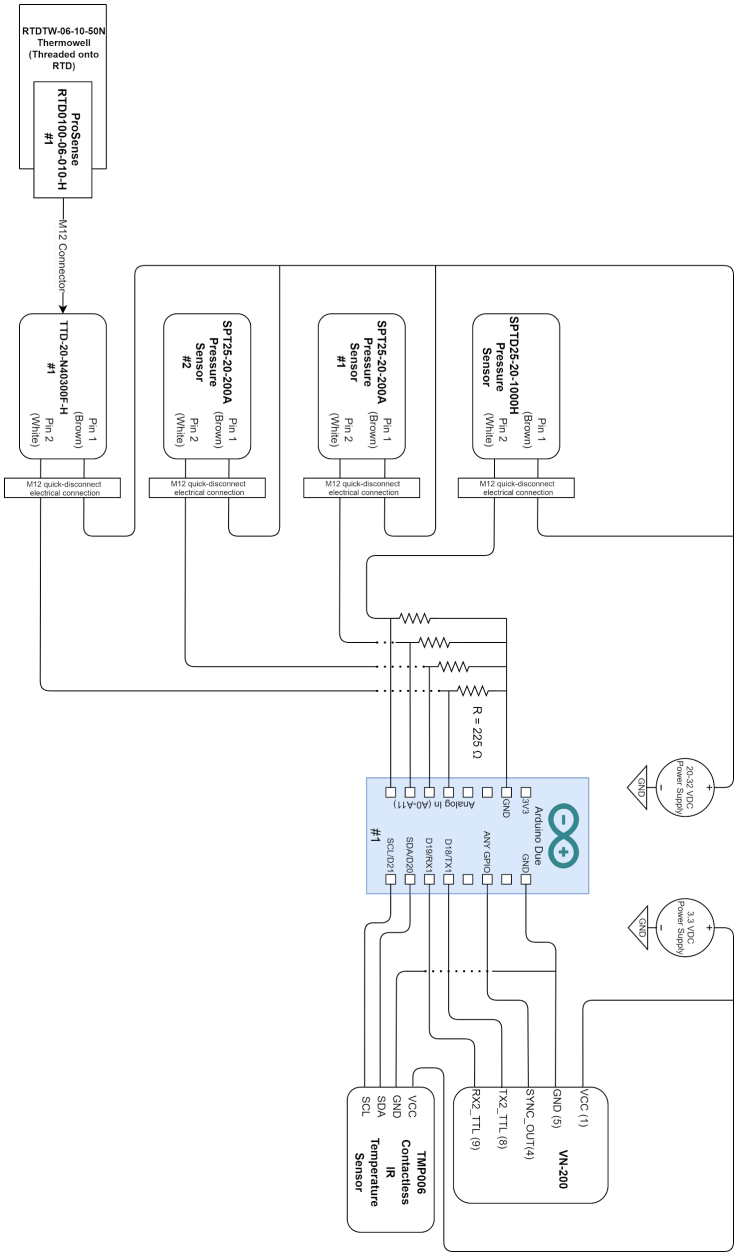

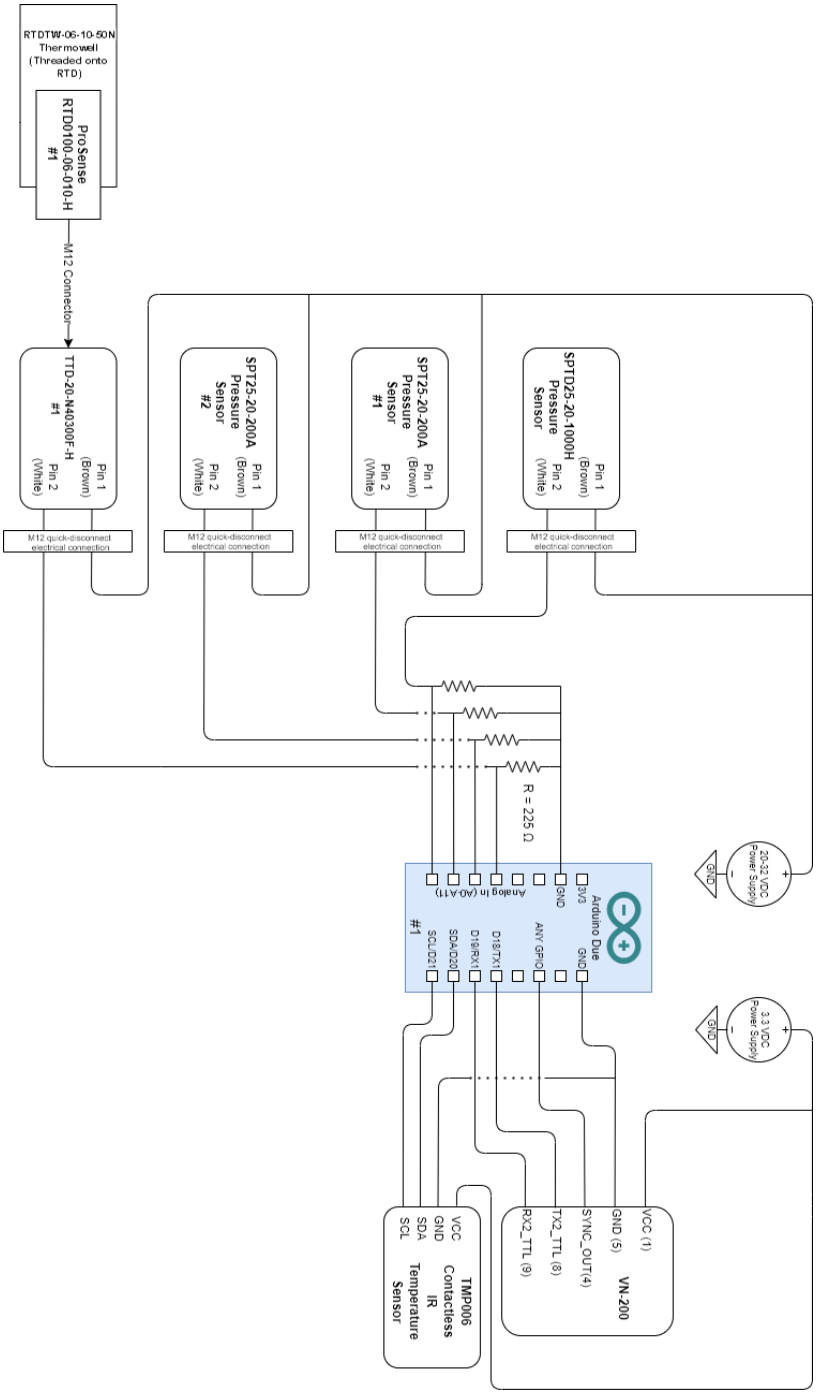
RTDTW-06-10-50N
Thermowell
(Threaded onto
RTD)
ProSense
RTD0100-06-010-H
#1
M12 Connector
TTD-20-N40300F-H
#1
Pin 1
(Brown)
Pin 2
(White)
M12 quick-disconnect
electrical connection
SPT25-20-200A
Pressure
Sensor
#2
SPT25-20-200A
Pressure
Sensor
#1
SPTD25-20-1000H
Pressure
Sensor
R = 225 Ω
Arduino Due
3V3
GND
Analog In (A0-A11)
ANY GPIO
D18/TX1
D19/RX1
SDA/D20
SCL/D21
#1
20-32 VDC
Power Supply
3.3 VDC
Power Supply
GND
VCC (1)
GND (5)
SYNC_OUT(4)
TX2_TTL (8)
RX2_TTL (9)
VN-200
VCC
GND
SDA
SCL
TMP006
Contactless
IR
Temperature
Sensor

AE2.2 Printed Circuit Board #2 Wiring Diagram

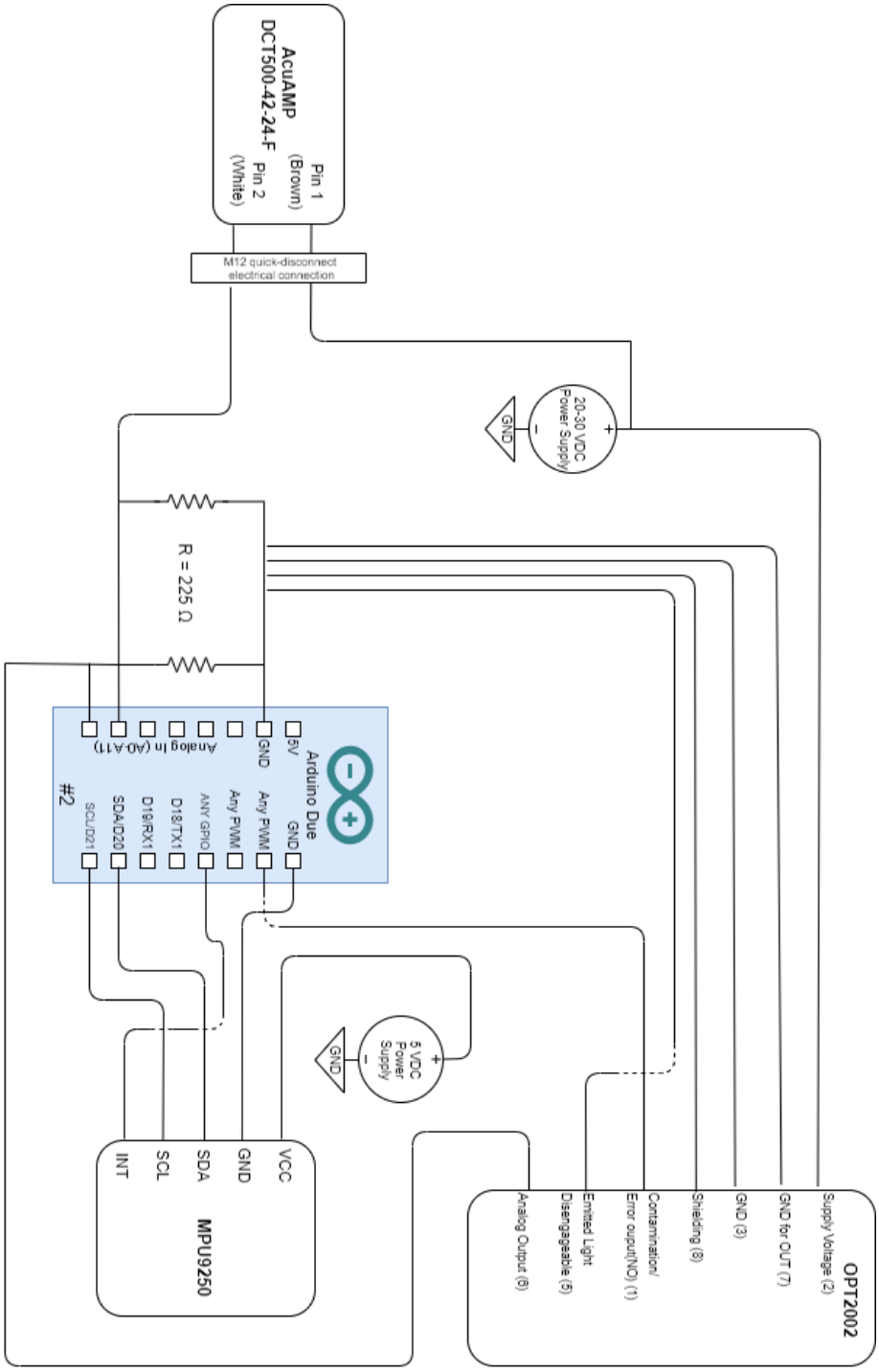

AE2.3 Printed Circuit Board #3 Wiring Diagram

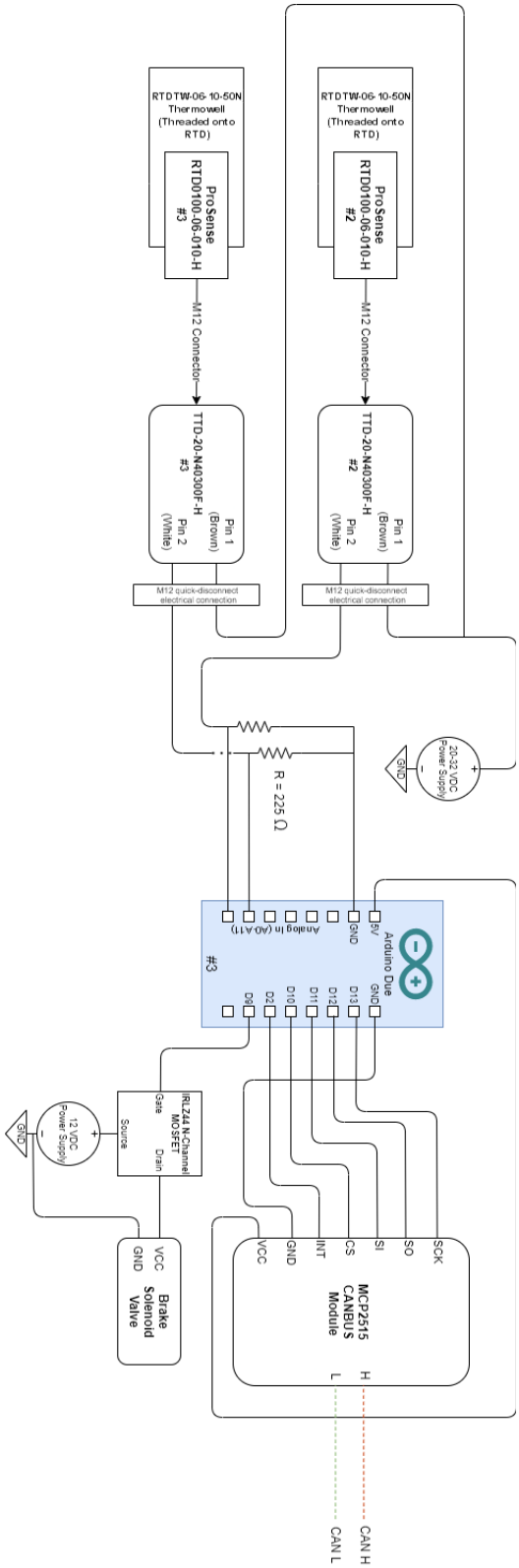

AE3: Complete Detailed Testing Procedure

Table AE3.1: Testing procedures per system

System	Part	Testing
Braking System	Pressure Sensor	The pressure sensors will be tested against known pressure values and compared to the sensor readings. This will be completed at the Dynamic Systems Lab at the University of Toronto.
Braking System	Arduino Due powering the solenoid valve	With the braking system at atmospheric pressure. The solenoid valve will be engaged (increase in pressure) and then once the valve is disengaged (decrease in pressure). This pressure increase and decrease will be measured using the pressure sensors. If this pressure change will be compared to the expected pressure change.
Propulsion System	CANBUS module	We will test the Canbus module and the inverter externally from the pod and observe how the signals from the CANBUS module affect the acceleration profiles of the motor.
Propulsion System	Temperature Sensor	The temperature sensors will be all tested separately in a controlled environment where the temperatures are known and the readings will be compared to the real values.
Internal Pod environment	Temperature Sensor	The temperature sensors will be all tested separately in a controlled environment where the temperatures are known and the readings will be compared to the real values.
Propulsion System	IMU	The IMUs will be tested in an controlled environment where the measured inertial measurements are known and the readings will be compared to the real values. This will be completed at the Dynamic Systems Lab at the University of Toronto.
Energy System	AcuAMP DCT500-42-24-F	The AcuAMP DCT500-42-24-F will be tested separately in an controlled environment where the DC Current is known and the readings will be compared to the real values. This will be completed at the Energy Systems Lab at the University of Toronto
Stability System	Wenglor Photoelectric OPT2002	The Wenglor Photoelectric OPT2002 will be tested in an controlled environment where the measured distance is known and the readings will be compared to the real values. This will be completed at the Photonics Lab at the University of Toronto.

AE4: MCP2515 CANBUS Connection to PM100DX

In order to control, send signals, and read data from the PM100DX Inverter of the pod, the MCP2515 CANBUS module was chosen as the shield to connect to an Arduino Due. It supports the CAN 2.0B protocol that uses 29 bit identifiers, thus capable of transmitting higher bit messages at fast speeds of up to 1Mbps[23]. This particular module was also chosen due to its small/compact footprint of 41 x 39 mm, allowing for more economical use of the pod's mounting space.

The MCP2515 uses SPI pins for wire connections which easily adapts to the Arduino Due allowing it to communicate with it, and includes CAN L (Low) and CAN H (High) pins that allow for communication between a transmitter and receiver node[24]. The MCP2515's CAN H and CAN L will be wired to the PM100 Inverter's CAN A High and CAN A Low pins, creating the CANbus. Below is a wiring diagram highlighting this:

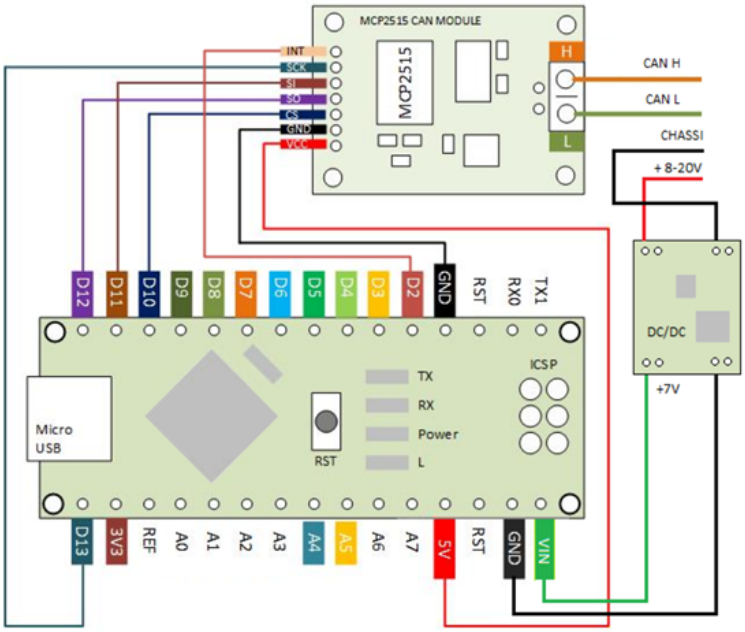

The MCP2515 wired to the Arduino Due[25]

[23] "MCP2515 CAN Bus Interface Module - ProtoSupplies", ProtoSupplies, 2020. [Online]. Available: https://protosupplies.com/product/mcp2515-can-bus-interface-module/. [Accessed: 13- Dec- 2020]
[24] "Arduino MCP2515 CAN Bus Interface Tutorial - CAN Protocol", Electronics Hub, 2020. [Online]. Available: https://www.electronicshub.org/arduino-mcp2515-can-bus-tutorial/. [Accessed: 13- Dec- 2020]
[25] "autowp/arduino-mcp2515", GitHub, 2020. [Online]. Available: https://github.com/autowp/arduino-mcp2515. [Accessed: 13- Dec- 2020]

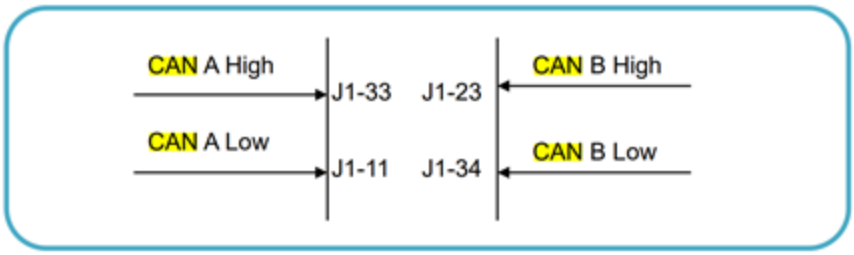

CANbus pins on the PM100 Inverter [26]

To control the torque of the PM100 Inverter, the MCP2515 is responsible for allowing communication with the inverter where we can send and receive data using the Arduino Due. On the PM100, we will need to configure its CAN parameters to set up the CAN message bits for proper bit indexing for data extraction. The inverter also includes CAN diagnostic parameters that displays any warning/error statuses.

The PM100 broadcasts the following messages[27]:

Address	Frequency	Content	CAN Active Messages (Low Word)
0x0A0	Slow/10 Hz	Temperatures #1	0x0001
0x0A1	Slow/10 Hz	Temperatures #2	0x0002
0x0A2	Slow/10 Hz	Temperatures #3	0x0004
0x0A3	Fast/100 Hz	Analog Inputs Voltages	0x0008
0x0A4	Fast/100 Hz	Digital Input Status	0x0010
0x0A5	Fast/100 Hz	Motor Position Information	0x0020
0x0A6	Fast/100 Hz	Current Information	0x0040
0x0A7	Fast/100 Hz	Voltage Information	0x0080
0x0A8	Fast/100 Hz	Flux Information	0x0100
0x0A9	Slow/10 Hz	Internal Voltages	0x0200
0x0AA	Fast/100 Hz	Internal States	0x0400
0x0AB	Fast/100 Hz	Fault Codes	0x0800
0x0AC	Fast/100 Hz	Torque & Timer Information	0x1000

The MCP2515 allows for easy readability and indexing of these CAN messages when connected to the Arduino Due, which will be done using the SPI.h and mcp2515.h files in our Arduino software [3]. These libraries give us the necessary functions to analyse and extract CANbus messages transmitted through the MCP2515. This makes it easier to create a robust CANbus communication system with the inverter, and will allow for testing. Test Arduino code will be written to understand how the inverter can be controlled safely and precisely.

[26] Wiki.neweagle.net, 2020. [Online]. Available: https://wiki.neweagle.net/docs/Rinehart/PM100_User_Manual_3_2011.pdf. [Accessed: 13- Dec- 2020]
[27] Wiki.neweagle.net, 2020. [Online]. Available: https://wiki.neweagle.net/docs/Rinehart/PM100_User_Manual_3_2011.pdf. [Accessed: 13- Dec- 2020]

AE5: PM100DX Inverter Startup Sequence[28]

Initially, the inverter starts at VSM_State 0 when it receives a 12V power. More details on the inverter VSM_State can be found in Table EPS1. The inverter has an internal state machine that steps through a series of actions at startup, at shutdown, and generally whenever operations "transition" from one mode or state to another. Table EOS1 is a list of the states that the inverter sequences through upon the application of power.

Table EPS1: Table of inverter vehicle state machine

VSM_State	Name
0	Start State
1	Pre-charge sequence initial state - Turn on the pre-charge relay
2	Pre-charge sequence active state - Waiting for the capacitor to finish charging
3	Pre-charge sequence finish state – Completes the final checks before proceeding to Wait State.
4	Wait State – waiting for activation of forward or reverse.
5	Ready State – Activates the inverter state machine to begin energizing the motor
6	Motor Running State – Normal motor running
7	Fault State – The controller has faulted
0xFFFF	Recycle Power State – This indicates that the power to the controller needs to be recycled after EEPROM Programming is complete.

The startup sequence for the inverter goes as follows:

1. VSM_State = 0
    a. Receive 12V power
    b. Perform Power On Self Test (POST)
        i. Several tests are performed in this state. Each test has an associated fault flag. The following is a list of some parameters checked:
            1. Current Sensor Offset
            2. Accel
            3. T_PCB

[28] Wiki.neweagle.net, 2020. [Online]. Available: https://wiki.neweagle.net/docs/Rinehart/PM100_User_Manual_3_2011.pdf. [Accessed: 13- Dec- 2020]

        ii. If a fault occurs, then the inverter reports back the fault through the post_fault_hi and post_fault_lo variables with the DSPGUI. If more than one fault has occurred, the number indicated will be an AND of the two faults. A full table of error faults and associated flags can be found in the PM100DX Inverter Manual.
    c. If no error flags are returned in POST, proceed to VSM_State 1
2. VSM_State = 1
    a. Pre-charge sequence initial state - Turn on the pre-charge relay
    b. Proceed to next VSM_State 2
3. VSM_State = 2
    a. Pre-charge sequence active state - Waiting for the capacitor to finish charging
    b. Proceed to next VSM_State 3
4. VSM_State = 3
    a. Pre-charge sequence finish state - Completes the final checks:
        i. If all the following are TRUE:
            1. Vdc stops rising by less than PRECHARGE_RATE
            2. Vdc is greater than VIN_MIN, Vdc is less than VIN_MAX
            3. Time has not exceeded 1 second
        ii. Then do the following:
            1. Engage the MAIN_OUT output
            2. Turn-off the PRE_CHG output
            3. Go to the 30ms delay
    b. Step 'a' should have taken 1s, if the total pre-charge time exceeds 1 second, then do the following checks:
        i. If the DC BUS is greater than VIN_MAX:
            1. Turn the PRE_CHG output off
            2. Declare VDC_OOR_HI fault
        ii. If the DC BUS is less than VIN_MIN:
            1. Turn the PRE_CHG output off
            2. Declare VDC_OOR_LOW fault
        iii. If the Vdc is still rising by more than or equal to PRECHARGE_RATE
            1. Turn off the PRECHARGE_OUT output
            2. Declare PRECHARGE_TIMEOUT fault
    c. Delay 30 ms
    d. Measure Vdc and check:
        i. If Vdc is above VIN_MAX, declare VDC_OOR_HI fault
        ii. If VDC is below VIN_MIN, declare VDC_OOR_LO fault
    e. Verify that voltage is within VDC_MATCH_RANGE_THRESHOLD of the first measurement. If not, declare VDC_DATA_MISMATCH fault.
    f. Proceed to next VSM_State 4

5. VSM_State = 4 (Wait State)
    a. Check Key Switch Mode, based on that value, inverter can be powered to run motor
    b. If Key Switch Mode 0
        i. Simple on/off ignition switch functionality
        ii. Turn ignition to ON position
        iii. Check if brake switch is active AND ONLY one of /FORWARD or /REVERSE
    c. If Key Switch Mode 1
        i. Traditional switch functionality
        ii. Turn ignition to ON position
        iii. Check if brake switch is active
        iv. Check off start signal pulse has been received
        v. While keeping brakes on, only one of /FORWARD or /REVERSE needs to be activated
    d. Proceed to next VSM_State 5
6. VSM_State = 5
    a. The READY state sends out Enable Inverter Command
    b. Wait for Inverter Ready Flag to be set
    c. If no response within a specific amount of time:
        i. Declare an INVERTER_RESPONSE_TIMEOUT_FAULT
    d. State automatically transitions to next state if no faults, VSM_State 6
7. VSM_State = 6
    a. The motor running state
    b. This is the normal running operation of the torque commanded field oriented controller that rides on top of the power electronics hardware. While running the drive can be switched from torque command mode to speed command mode. It may be exercised within the full operating envelope of the machine / drive combination.

On top of the VSM_State, the inverter has another set of built in state machines known as Inverter States and is shown by the variable inv_mode. Most of the motor running modes in VSM_State=6 can be accessed from this variable. A full list and description can be found in Table EPS 2.

Table EPS 2: Inverter States Table

Inverter States (inv_mode)	Description
0	Precharge, power-up state
1	Stop - Inverter is not running and is in “STOP” state.
2	Open Loop State - for testing purposes
3	Closed Loop state – normal state
4	Start Time Delay – small delay before starting the inverter
5	Current Sensor Test – flux ramp and flux regulators enabled
6	Closed Loop Torque – iorque regulator is enabled
7	Torque Ramp – start torque ramp
8	Idle Run – inverter running normally
9	Idle Stop – inverter is stopped
10	Ramp Off Torque – ramps down the torque command
11	Ramp Off Flux – ramps down the flux command
12	All Ramps Off – shutoff inverter
15	Default – Stop state