POWER BANK

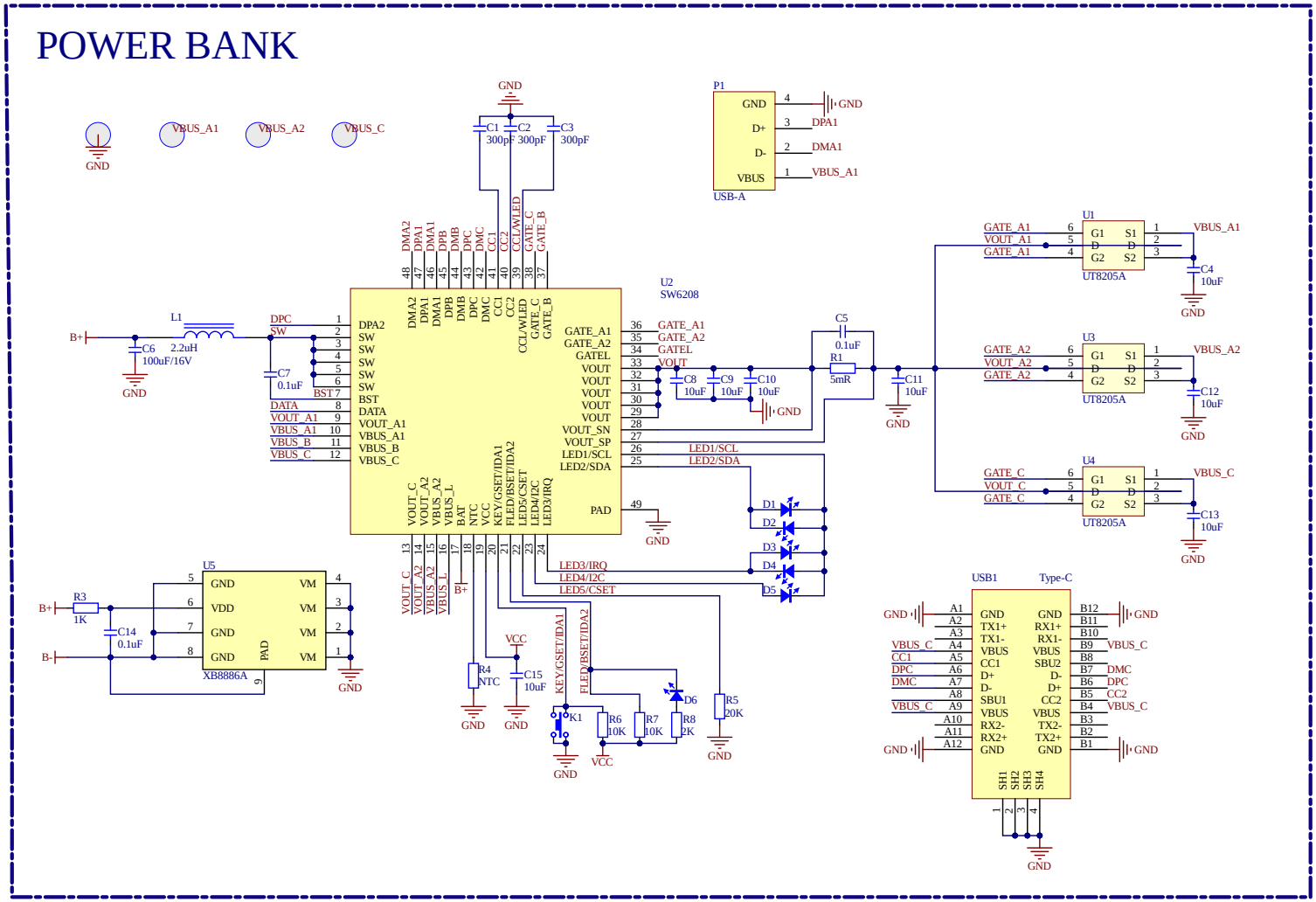

Title		
Size A3	Number	Revision
Date: 10/14/2021		Sheet of
File: Q:\XG20200921\..\Main.SchDoc		Drawn By:

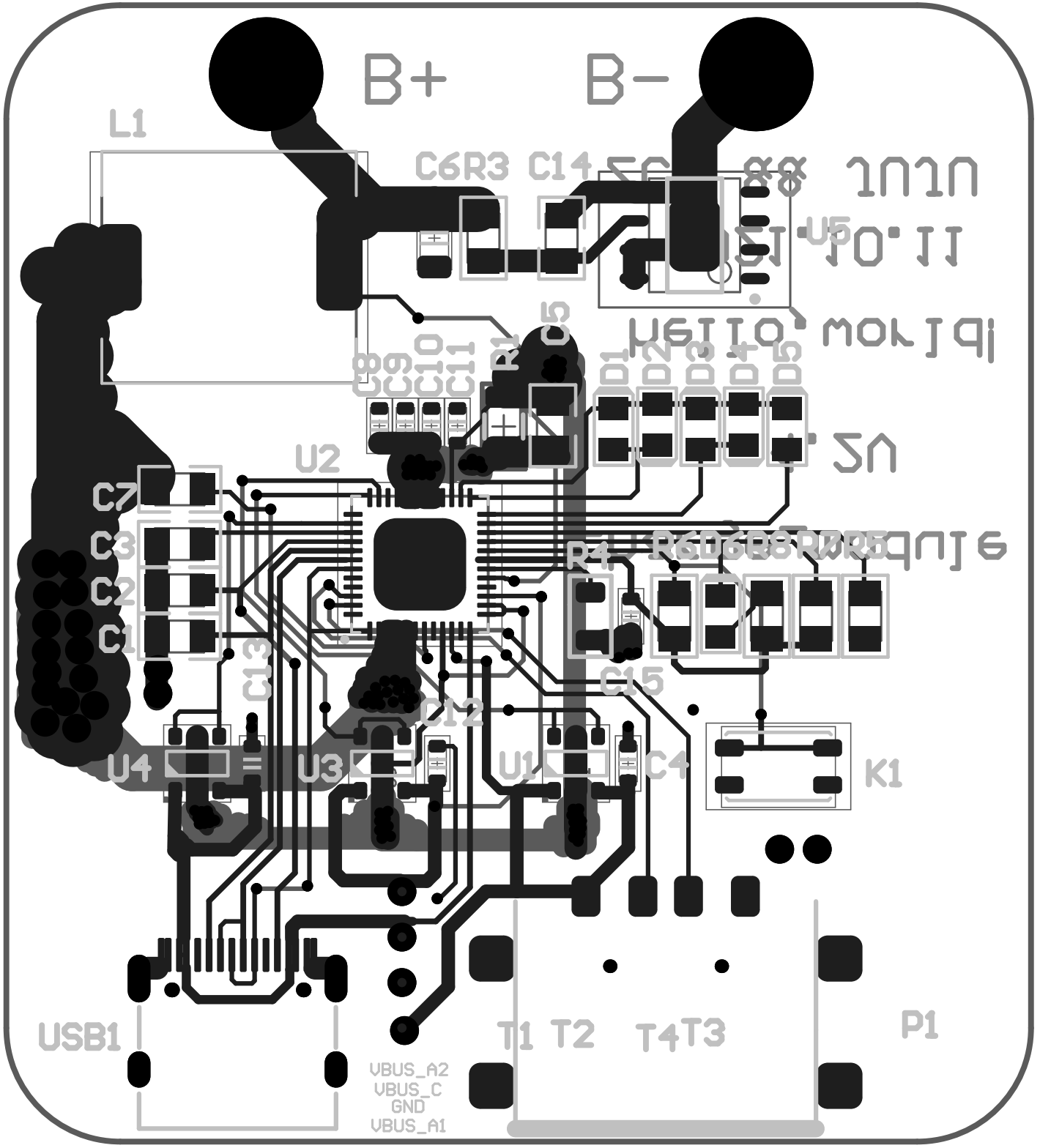
B+
B-
L1
C6
R3
C14
U5
C5
C8
C9
C10
C11
R1
D1
D2
D3
D4
D5
U2
C7
C3
C2
C1
R4
C13
C15
C12
U4
U3
U1
C4
K1
USB1
T1
T2
T4
T3
P1
VBUS_A2
VBUS_C
GND
VBUS_A1

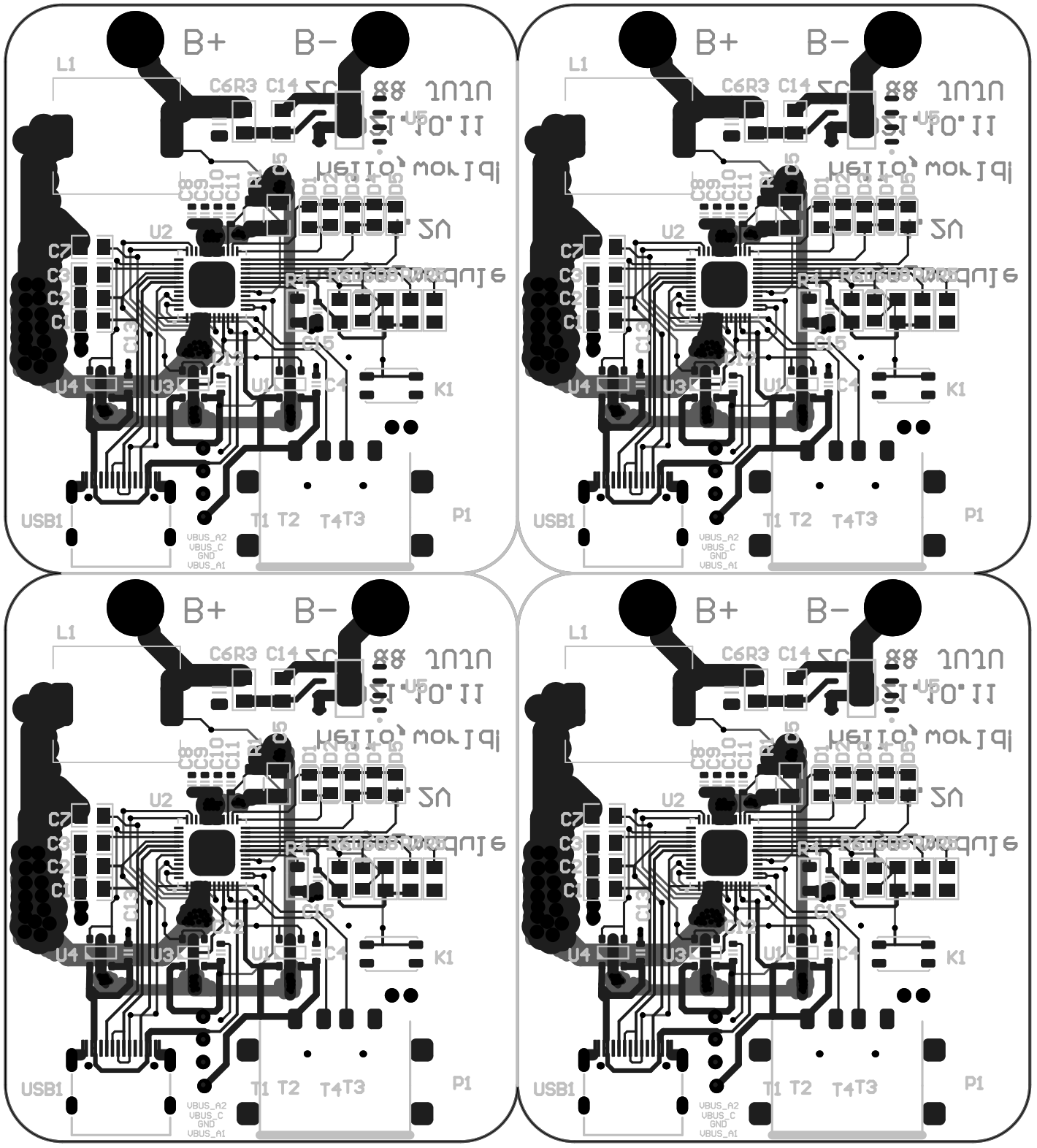
B+
B-
L1
C6R3 C14
U5
U2
C7
C3
C2
C1
C13
C15
U4
U3
U1
C4
K1
USB1
T1 T2
T4T3
P1
VBUS_A2
VBUS_C
GND
VBUS_A1

Comment	Description	Designator	Footprint	LibRef	Quantity
300pF	Capacitor	C1, C2, C3	0805C	电容-0402	3
10uF	Capacitor	C4, C8, C9, C10, C11, C12, C13, C15	0603-CAP	电容-0603	8
0.1uF	Capacitor	C5, C7, C14	0805C	电容-0402	3
100uF/16V	Capacitor	C6	1206-CAP	电容-1206	1
color?	LED	D1, D2, D3, D4, D5, D6	LED0805R	LED_0402	6
TACT 4P	Button	K1	ButtonTACT_3.5*3.55_90	ButtonTACT	1
2.2uH	Fixed Inductors 4.7uH 30% SMD 1240	L1	IND_1040	电感-1040	1
USB-A		P1	USB-Short	USB-A	1
5mR	Resistor	R1	1206-RES	电阻-1206	1
1K	Resistor	R3	0805R	电阻-0402	1
NTC	Resistor	R4	0805-L	电阻-0805	1
20K	Resistor	R5	0805R	电阻-0402	1
10K	Resistor	R6, R7	0805R	电阻-0402	2
2K	Resistor	R8	0805R	电阻-0402	1
测试点		T1, T2, T3, T4	TEST_PT	测试点	4
UT8205A		U1, U3, U4	SOT23-6	UT8205A	3
SW6208	充电宝芯片	U2	QFN-48_6x6	SW6208	1
XB8886A		U5	SO-8-PAD	XB8886A	1
Type-C		USB1	Type-C-TOP	USB-Type-C-TOP	1