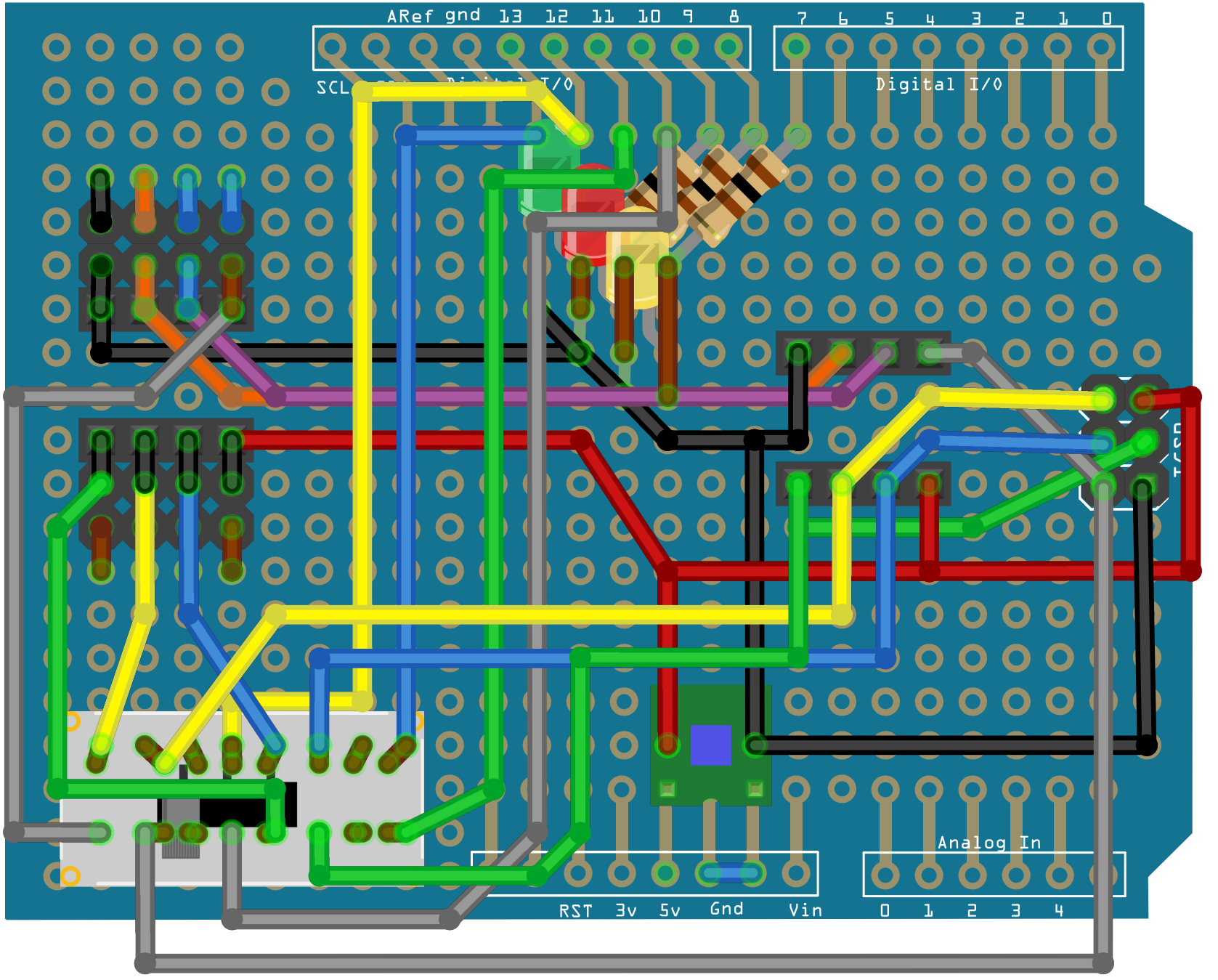
ARef gnd 13 12 11 10 9 8
7 6 5 4 3 2 1 0
Digital I/O
RST 3v 5v Gnd Vin
Analog In
0 1 2 3 4

fritzing