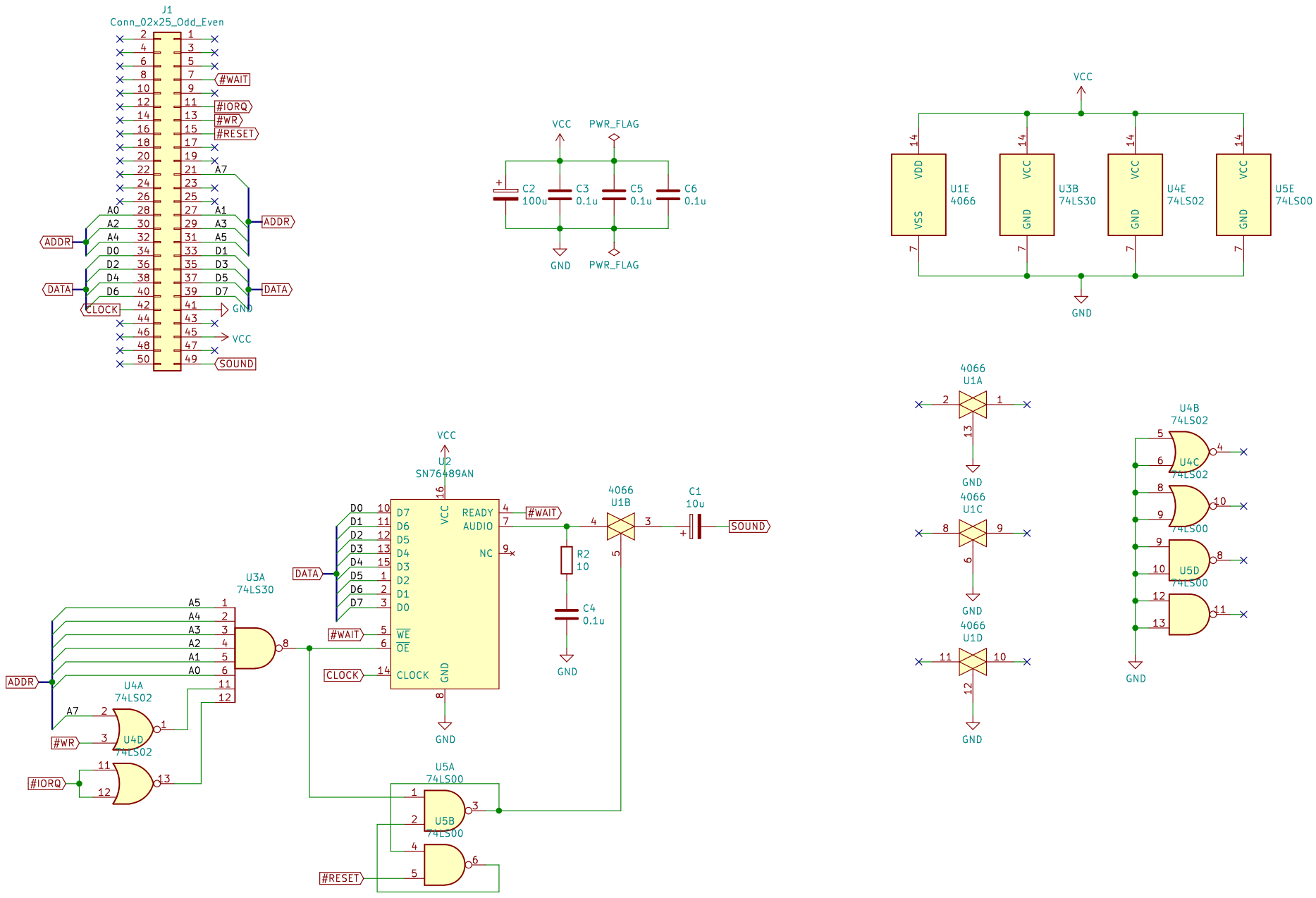
J1
Conn_02x25_Odd_Even
#WAIT
#IORQ
#WR
#RESET
ADDR
DATA
CLOCK
SOUND
VCC
GND
A0
A1
A2
A3
A4
A5
A7
D0
D1
D2
D3
D4
D5
D6
D7
C2
100u
C3
0.1u
C5
0.1u
C6
0.1u
PWR_FLAG
U1E
4066
U3B
74LS30
U4E
74LS02
U5E
74LS00
VDD
VSS
U2
SN76489AN
READY
AUDIO
NC
WE
OE
CLOCK
U1B
C1
10u
R2
10
C4
0.1u
U3A
74LS30
U4A
74LS02
U4D
74LS02
U5A
74LS00
U5B
74LS00
U1A
U1C
U1D
U4B
74LS02
U4C
74LS02
U5D
74LS00