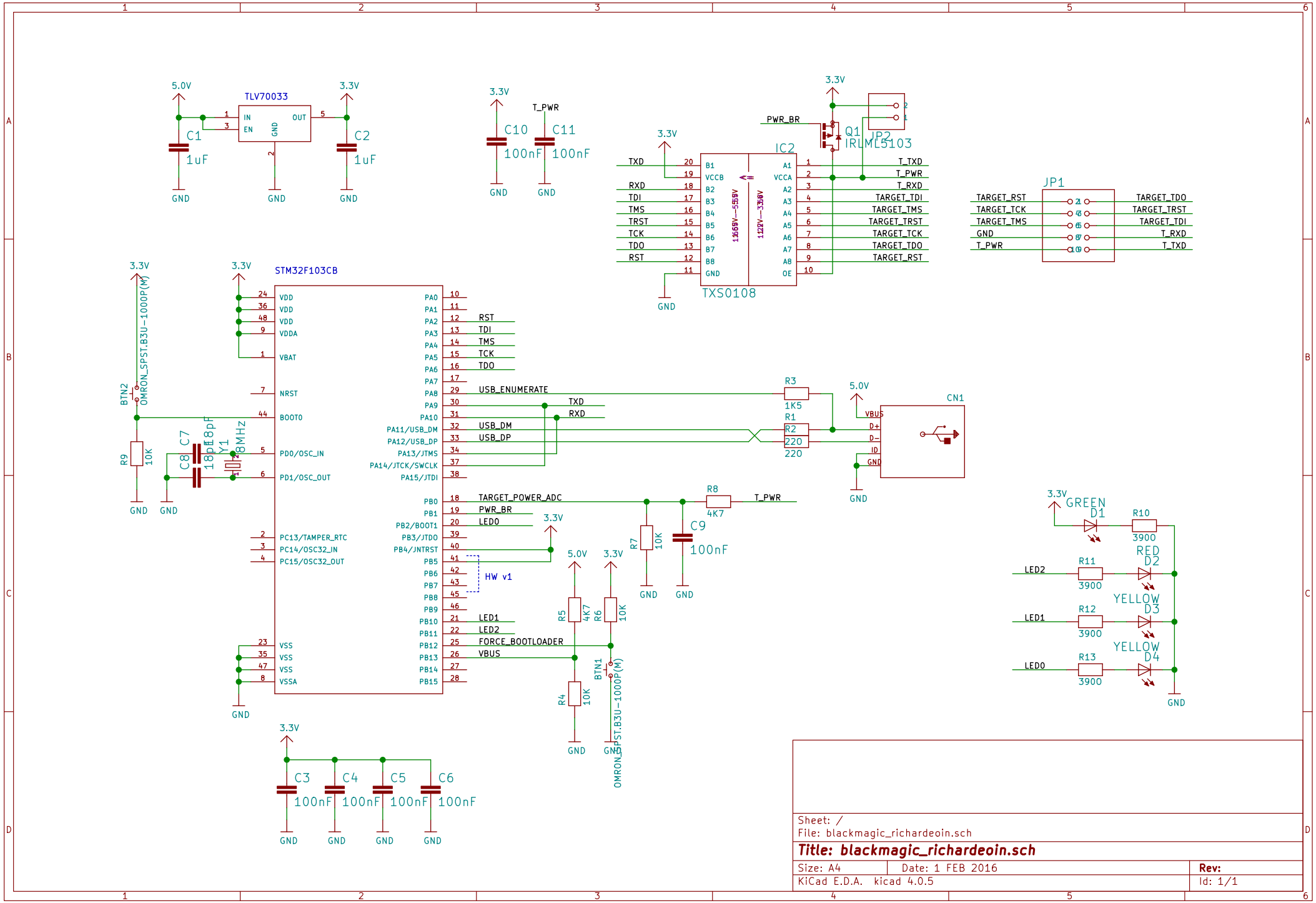

Sheet: /
File: blackmagic_richardeoin.sch

Title: blackmagic_richardeoin.sch

Size: A4	Date: 1 FEB 2016	Rev:
KiCad E.D.A. kicad 4.0.5		Id: 1/1